INTERCONNECTION
AGREEMENT
BETWEEN
BELLSOUTH TELECOMMUNICATIONS INC.
AND
ACCESS POINT, INC.

TABLE OF CONTENTS

General Terms and Conditions

1. Definitions
2. Term of the Agreement
3. Operational Support Systems
4. Parity
5. White Pages Listings
6. Bona Fide Request/New Business Request Process for Further Unbundling
7. Court Ordered Requests for Call Detail Records and Other Subscriber Information
8. Liability and Indemnification
9. Intellectual Property Rights and Indemnification
10. Proprietary and Confidential Information
11. Assignments
12. Resolution of Disputes
13. Taxes
14. Force Majeure
15. Adoption of Agreements
16. Modification of Agreement
17. Non-waiver of Legal Rights
18. Severability
19. Waivers
20. Governing Law
21. Arm's Length Negotiations
22. Notices
23. Rule of Construction
24. Headings of No Force or Effect
25. Multiple Counterparts
26. Implementation of Agreement
27. Filing of Agreement
28. Compliance with Applicable Law
29. Necessary Approvals
30. Good Faith Performance
31. Nonexclusive Dealings
32. Survival
33. Entire Agreement

Attachment 1 - Resale
Attachment 2 - Network Elements and Other Services
Attachment 3 - Network Interconnection
Attachment 4 - Physical Collocation
Attachment 5 - Access to Numbers and Number Portability
Attachment 6 – Pre-Ordering, Ordering and Provisioning, Maintenance and Repair
Attachment 7 - Billing and Billing Accuracy Certification
Attachment 8 - Rights-of-Way, Conduits and Pole Attachments
Attachment 9 - Performance Measurements
Attachment 10- Agreement Implementation Template

Attachment 11- BellSouth Disaster Recovery Plan
Attachment 12 – Bona Fide Request/New Business Request Process

AGREEMENT

THIS AGREEMENT is made by and between BellSouth Telecommunications, Inc., ("BellSouth"), a Georgia corporation, and Access Point, Inc., ("API"), a North Carolina corporation, and shall be deemed effective as of the date of the last signature of both Parties ("Effective Date"). This Agreement may refer to either BellSouth or API or both as a "Party" or "Parties."

W I T N E S S E T H

WHEREAS, BellSouth is a local exchange telecommunications company authorized to provide telecommunications services in the states of Alabama, Florida, Georgia, Kentucky, Louisiana, Mississippi, North Carolina, South Carolina and Tennessee; and

WHEREAS, API is or seeks to become a CLEC authorized to provide telecommunications services in the states of Alabama, Florida, Georgia, Kentucky, Louisiana, Mississippi, North Carolina, South Carolina, and Tennessee; and

WHEREAS, API wishes to resell BellSouth's telecommunications services and purchase network elements and other services, and the Parties wish to interconnect their facilities and exchange traffic pursuant to sections 251 and 252 of the Act.

NOW THEREFORE, in consideration of the mutual agreements contained herein, BellSouth and API agree as follows:

1. Definitions

Affiliate is defined as a person that (directly or indirectly) owns or controls, is owned or controlled by, or is under common ownership or control with, another person. For purposes of this paragraph, the term "own" means to own an equity interest (or equivalent thereof) of more than 10 percent.

Commission is defined as the appropriate regulatory agency in each of BellSouth's nine-state region, Alabama, Florida, Georgia, Kentucky, Louisiana, Mississippi, North Carolina, South Carolina, and Tennessee.

Competitive Local Exchange Carrier (CLEC) means a telephone company certificated by the Commission to provide local exchange service within BellSouth's franchised area.

End User means the ultimate user of the Telecommunications Service.

FCC means the Federal Communication Commission.

Telecommunications means the transmission, between or among points specified by the user, of information of the user's choosing, without change in the form or content of the information as sent and received.

Telecommunications Service means the offering of telecommunications for a fee directly to the public, or to such classes of users as to be effectively available directly to the public, regardless of the facilities used.

Telecommunications Act of 1996 ("Act") means Public Law 104-104 of the United States Congress effective February 8, 1996. The Act amended the Communications Act of 1934 (47 U.S.C. Section 1 et. seq.).

2. Term of the Agreement

2.1 The term of this Agreement shall be two years, beginning on the Effective Date and shall apply to the state(s) of Alabama, Florida, Georgia, Kentucky, Louisiana, Mississippi, North Carolina, South Carolina and Tennessee.

2.2 The Parties agree that by no earlier than two hundred seventy (270) days and no later than one hundred and eighty (180) days prior to the expiration of this Agreement, they shall commence negotiations for a new agreement to be effective beginning on the expiration date of this Agreement ("Subsequent Agreement"). If as of the expiration of this Agreement, a Subsequent Agreement has not been executed by the Parties, then except as set forth in Section 2.3.2 below, this Agreement shall continue on a month-to-month basis while a Subsequent Agreement is being negotiated. The Parties' rights and obligations with respect to this Agreement after expiration shall be as set forth in Section 2.3 below.

2.3 If, within one hundred and thirty-five (135) days of commencing the negotiation referred to in Section 2.2 above, the Parties are unable to negotiate new terms, conditions and prices for a Subsequent Agreement, either Party may petition the Commission to establish appropriate terms, conditions and prices for the Subsequent Agreement pursuant to 47 U.S.C. 252. In the event the Commission does not issue its order prior to the expiration date of this Agreement, or if the Parties continue beyond the expiration date of this Agreement to negotiate the Subsequent Agreement without Commission intervention, the terms, conditions and prices ultimately ordered by the Commission, or negotiated by the Parties, will be effective retroactive to the day following the expiration date of this Agreement.

2.3.1 Except as set forth in Section 2.3.2 below, Notwithstanding the foregoing, in the event that as of the date of expiration of this Agreement and conversion of this Agreement to a month-to-month term, the Parties have not entered into a Subsequent Agreement and no arbitration proceeding has been filed in accordance with Section 2.3 above, then either Party may terminate this Agreement upon sixty

(60) days notice to the other Party. In the event that BellSouth terminates this Agreement as provided above, BellSouth shall continue to offer services to API pursuant to the terms, conditions and rates set forth in BellSouth's Statement of Generally Available Terms (SGAT) to the extent an SGAT has been approved by the applicable Commission(s). If any state Commission has not approved a BellSouth SGAT, then upon BellSouth's termination of this Agreement as provided herein, BellSouth will continue to provide services to API pursuant to BellSouth's then current standard interconnection agreement. In the event that the SGAT or BellSouth's standard interconnection agreement becomes effective as between the Parties, the Parties may continue to negotiate a Subsequent Agreement, and the terms of such Subsequent Agreement shall be effective as of the date of execution.

2.3.2 Notwithstanding Section 2.3 above, in the event that as of the date of expiration of this Agreement the Parties have not entered into a Subsequent Agreement and (1) no arbitration proceeding has been filed in accordance with Section 2.2 above, and (2) API either is not certified as a CLEC in any particular state to which this Agreement applies or has not ordered any services under this Agreement as of the date of expiration, then this Agreement shall not continue on a month to month basis but shall be deemed terminated as of the expiration date hereof.

3. Operational Support Systems

API shall pay charges for Operational Support Systems (OSS) as set forth in this Agreement in Attachment 1 and/or in Attachments 2, 3 and 5, as applicable.

4. Parity

When API purchases, pursuant to Attachment 1 of this Agreement, telecommunications services from BellSouth for the purposes of resale to end users, BellSouth shall provide said services so that the services are equal in quality, subject to the same conditions, and provided within the same provisioning time intervals that BellSouth provides to its affiliates, subsidiaries and end users. To the extent technically feasible, the quality of a Network Element, as well as the quality of the access to such Network Element provided by BellSouth to API shall be at least equal in quality to that which BellSouth provides to itself, its affiliates or any other telecommunications carrier. The quality of the interconnection between the networks of BellSouth and the network of API shall be at a level that is equal to that which BellSouth provides itself, a subsidiary, an Affiliate, or any other party. The interconnection facilities shall be designed to meet the same technical criteria and service standards that are used within BellSouth’s network and shall extend to a consideration of service quality as perceived by end users and service quality as perceived by API.

5. White Pages Listings

5.1 BellSouth shall provide API and their customers access to white pages directory listings under the following terms:

5.2. Listings. API shall provide all new, changed and deleted listings on a timely basis and BellSouth or its agent will include API residential and business customer listings in the appropriate White Pages (residential and business) or alphabetical directories. Directory listings will make no distinction between API and BellSouth subscribers.

5.2.1 Rates. So long as API provides subscriber listing information to BellSouth in accordance with Section 5.3 below, BellSouth shall provide to API one (1) primary White Pages listing per API subscriber at no charge other than applicable service order charges as set forth in BellSouth's tariffs.

5.3 Procedures for Submitting API Subscriber Information are found in The BellSouth Business Rules for Local Ordering.

5.3.1 Notwithstanding any provision(s) to the contrary, API shall provide to BellSouth, and BellSouth shall accept, API's Subscriber Listing Information (SLI) relating to API's customers in the geographic area(s) covered by this Interconnection Agreement. API authorizes BellSouth to release all such API SLI provided to BellSouth by API to qualifying third parties via either license agreement or BellSouth's Directory Publishers Database Service (DPDS), General Subscriber Services Tariff, Section A38.2, as the same may be amended from time to time. Such API SLI shall be intermingled with BellSouth's own customer listings and listings of any other CLEC that has authorized a similar release of SLI. Where necessary, BellSouth will use good faith efforts to obtain state commission approval of any necessary modifications to Section A38.2 of its tariff to provide for release of third party directory listings, including modifications regarding listings to be released pursuant to such tariff and BellSouth's liability thereunder. BellSouth's obligation pursuant to this Section shall not arise in any particular state until the commission of such state has approved modifications to such tariff.

5.3.2 No compensation shall be paid to API for BellSouth's receipt of API SLI, or for the subsequent release to third parties of such SLI. In addition, to the extent BellSouth incurs costs to modify its systems to enable the release of API's SLI, or costs on an ongoing basis to administer the release of API SLI, API shall pay to BellSouth its proportionate share of the reasonable costs associated therewith.

5.3.3 BellSouth shall not be liable for the content or accuracy of any SLI provided by API under this Agreement. API shall indemnify, hold harmless and defend BellSouth and its agents from and against any damages, losses, liabilities, demands claims, suits, judgments, costs and expenses (including but not limited to

reasonable attorneys' fees and expenses) arising from BellSouth's tariff obligations or otherwise and resulting from or arising out of any third party's claim of inaccurate API listings or use of the SLI provided pursuant to this Agreement. BellSouth may forward to API any complaints received by BellSouth relating to the accuracy or quality of API listings.

5.3.4 Listings and subsequent updates will be released consistent with BellSouth system changes and/or update scheduling requirements.

5.4 Unlisted/Non-Published Subscribers. API will be required to provide to BellSouth the names, addresses and telephone numbers of all API customers that wish to be omitted from directories.

5.5 Inclusion of API Customers in Directory Assistance Database. BellSouth will include and maintain API subscriber listings in BellSouth's Directory Assistance databases at no recurring charge and API shall provide such Directory Assistance listings at no recurring charge. BellSouth and API will formulate appropriate procedures regarding lead-time, timeliness, format and content of listing information.

5.6 Listing Information Confidentiality. BellSouth will accord API's directory listing information the same level of confidentiality that BellSouth accords its own directory listing information, and BellSouth shall limit access to API's customer proprietary confidential directory information to those BellSouth employees or agents who are involved in the preparation of listings or directories.

5.7 Optional Listings. Additional listings and optional listings will be offered by BellSouth at tariffed rates as set forth in the General Subscriber Services Tariff.

5.8 Delivery. BellSouth or its agent shall deliver White Pages directories to API subscribers at no charge or as specified in a separate BAPCO agreement.

6. Bona Fide Request/New Business Request Process for Further Unbundling

6.1 BellSouth shall, upon request of API, provide to API access to its network elements at any technically feasible point for the provision of API's telecommunications service where such access is necessary and failure to provide access would impair the ability of API to provide services that it seeks to offer. Any request by API for access to a network element, interconnection option, or for the provisioning of any service or product that is not already available shall be treated as a Bona Fide Request/New Business Request (BFR/NBR), and shall be submitted to BellSouth pursuant to the BFR/NBR process.

6.2 API shall submit any BFR/NBR in writing to API's Account Manager. The BFR/NBR shall specifically identify the requested service date, technical requirements, space requirements and/or such specifications that clearly define the

request such that BellSouth has sufficient information to analyze and prepare a response. The BFR/NBR also shall include API's designation of the request as being (i) pursuant to the Telecommunications Act of 1996 or (ii) pursuant to the needs of the business.

7. Court Ordered Requests for Call Detail Records and Other Subscriber Information

7.1 Subpoenas Directed to BellSouth. Where BellSouth provides resold services or local switching for API, BellSouth shall respond to subpoenas and court ordered requests delivered directly to BellSouth for the purpose of providing call detail records when the targeted telephone numbers belong to API end users. Billing for such requests will be generated by BellSouth and directed to the law enforcement agency initiating the request. BellSouth shall maintain such information for API end users for the same length of time it maintains such information for its own end users.

7.2 Subpoenas Directed to API. Where BellSouth is providing to API telecommunications services for resale or providing to API the local switching function, then API agrees that in those cases where API receives subpoenas or court ordered requests regarding targeted telephone numbers belonging to API end users, and where API does not have the requested information, API will advise the law enforcement agency initiating the request to redirect the subpoena or court ordered request to BellSouth for handling in accordance with 7.1 above.

7.3 In all other instances, where either Party receives a request for information involving the other Party's end user, the Party receiving the request will advise the law enforcement agency initiating the request to redirect such request to the other Party.

8. Liability and Indemnification

8.1 API Liability. In the event that API consists of two (2) or more separate entities as set forth in this Agreement and/or any Amendments hereto, all such entities shall be jointly and severally liable for the obligations of API under this Agreement.

8.2 Liability for Acts or Omissions of Third Parties. BellSouth shall not be liable to API for any act or omission of another telecommunications company providing services to API.

8.3 Limitation of Liability

8.3.1 Except for any indemnification obligations of the Parties hereunder, each Party's liability to the other for any loss, cost, claim, injury or liability or expense, including reasonable attorney's fees relating to or arising out of any negligent act or omission in its performance of this Agreement whether in contract or in tort,

shall be limited to a credit for the actual cost of the services or functions not performed or improperly performed.

8.3.2 Limitations in Tariffs. A Party may, in its sole discretion, provide in its tariffs and contracts with its End Users and third parties that relate to any service, product or function provided or contemplated under this Agreement, that to the maximum extent permitted by Applicable Law, such Party shall not be liable to the End User or third Party for (i) any loss relating to or arising out of this Agreement, whether in contract, tort or otherwise, that exceeds the amount such Party would have charged that applicable person for the service, product or function that gave rise to such loss and (ii) Consequential Damages. To the extent that a Party elects not to place in its tariffs or contracts such limitations of liability, and the other Party incurs a loss as a result thereof, such Party shall indemnify and reimburse the other Party for that portion of the loss that would have been limited had the first Party included in its tariffs and contracts the limitations of liability that such other Party included in its own tariffs at the time of such loss.

8.3.3 Neither BellSouth nor API shall be liable for damages to the other Party's terminal location, equipment or End User premises resulting from the furnishing of a service, including, but not limited to, the installation and removal of equipment or associated wiring, except to the extent caused by a Party's negligence or willful misconduct or by a Party's failure to ground properly a local loop after disconnection.

8.3.4 Under no circumstance shall a Party be responsible or liable for indirect, incidental, or consequential damages, including, but not limited to, economic loss or lost business or profits, damages arising from the use or performance of equipment or software, or the loss of use of software or equipment, or accessories attached thereto, delay, error, or loss of data. In connection with this limitation of liability, each Party recognizes that the other Party may, from time to time, provide advice, make recommendations, or supply other analyses related to the Services, or facilities described in this Agreement, and, while each Party shall use diligent efforts in this regard, the Parties acknowledge and agree that this limitation of liability shall apply to provision of such advice, recommendations, and analyses.

8.3.5 To the extent any specific provision of this Agreement purports to impose liability, or limitation of liability, on either Party different from or in conflict with the liability or limitation of liability set forth in this Section, then with respect to any facts or circumstances covered by such specific provisions, the liability or limitation of liability contained in such specific provision shall apply.

8.4 Indemnification for Certain Claims. The Party providing services hereunder, its affiliates and its parent company, shall be indemnified, defended and held harmless by the Party receiving services hereunder against any claim, loss or damage arising from the receiving company's use of the services provided under

this Agreement pertaining to (1) claims for libel, slander or invasion of privacy arising from the content of the receiving company's own communications, or (2) any claim, loss or damage claimed by the End User of the Party receiving services arising from such company's use or reliance on the providing company's services, actions, duties, or obligations arising out of this Agreement.

8.5 Disclaimer. EXCEPT AS SPECIFICALLY PROVIDED TO THE CONTRARY IN THIS AGREEMENT, NEITHER PARTY MAKES ANY REPRESENTATIONS OR WARRANTIES TO THE OTHER PARTY CONCERNING THE SPECIFIC QUALITY OF ANY SERVICES, OR FACILITIES PROVIDED UNDER THIS AGREEMENT. THE PARTIES DISCLAIM, WITHOUT LIMITATION, ANY WARRANTY OR GUARANTEE OF MERCHANTABILITY OR FITNESS FOR A PARTICULAR PURPOSE, ARISING FROM COURSE OF PERFORMANCE, COURSE OF DEALING, OR FROM USAGES OF TRADE.

9. Intellectual Property Rights and Indemnification

9.1 No License. No patent, copyright, trademark or other proprietary right is licensed, granted or otherwise transferred by this Agreement. API is strictly prohibited from any use, including but not limited to in sales, in marketing or advertising of telecommunications services, of any BellSouth name, service mark or trademark. Notwithstanding the foregoing, API may use BellSouth's name solely in response to inquiries of customers or potential customers regarding the source of the underlying service or the identity of repair or service technicians under this Agreement.

9.2 Ownership of Intellectual Property. Any intellectual property which originates from or is developed by a Party shall remain the exclusive property of that Party. Except for a limited license to use patents or copyrights to the extent necessary for the Parties to use any facilities or equipment (including software) or to receive any service solely as provided under this Agreement, no license in patent, copyright, trademark or trade secret, or other proprietary or intellectual property right now or hereafter owned, controlled or licensable by a Party, is granted to the other Party or shall be implied or arise by estoppel. It is the responsibility of each Party to ensure at no additional cost to the other Party that it has obtained any necessary licenses in relation to intellectual property of third Parties used in its network that may be required to enable the other Party to use any facilities or equipment (including software), to receive any service, or to perform its respective obligations under this Agreement.

9.3 Indemnification. The Party providing a service pursuant to this Agreement will defend the Party receiving such service or data provided as a result of such service against claims of infringement arising solely from the use by the receiving Party of such service in the manner contemplated under this Agreement and will

indemnify the receiving Party for any damages awarded based solely on such claims in accordance with Section 8 of this Agreement.

9.4 Claim of Infringement. In the event that use of any facilities or equipment (including software), becomes, or in the reasonable judgment of the Party who owns the affected network is likely to become, the subject of a claim, action, suit, or proceeding based on intellectual property infringement, then said Party shall promptly and at its sole expense and sole option, but subject to the limitations of liability set forth below:

9.4.1 modify or replace the applicable facilities or equipment (including software) while maintaining form and function, or

9.4.2 obtain a license sufficient to allow such use to continue.

9.4.3 In the event 9.4.1 or 9.4.2 are commercially unreasonable, then said Party may, terminate, upon reasonable notice, this contract with respect to use of, or services provided through use of, the affected facilities or equipment (including software), but solely to the extent required to avoid the infringement claim.

9.5 Exception to Obligations. Neither Party's obligations under this Section shall apply to the extent the infringement is caused by: (i) modification of the facilities or equipment (including software) by the indemnitee; (ii) use by the indemnitee of the facilities or equipment (including software) in combination with equipment or facilities (including software) not provided or authorized by the indemnitor, provided the facilities or equipment (including software) would not be infringing if used alone; (iii) conformance to specifications of the indemnitee which would necessarily result in infringement; or (iv) continued use by the indemnitee of the affected facilities or equipment (including software) after being placed on notice to discontinue use as set forth herein.

9.6 Exclusive Remedy. The foregoing shall constitute the Parties' sole and exclusive remedies and obligations with respect to a third party claim of intellectual property infringement arising out of the conduct of business under this Agreement.

10. Proprietary and Confidential Information

10.1 Proprietary and Confidential Information. It may be necessary for BellSouth and API, each as the “Discloser,” to provide to the other Party, as “Recipient,” certain proprietary and confidential information (including trade secret information) including but not limited to technical, financial, marketing, staffing and business plans and information, strategic information, proposals, request for proposals, specifications, drawings, maps, prices, costs, costing methodologies, procedures, processes, business systems, software programs, techniques, customer account data, call detail records and like information (collectively the “Information”). All

such Information conveyed in writing or other tangible form shall be clearly marked with a confidential or proprietary legend. Information conveyed orally by the Discloser to Recipient shall be designated as proprietary and confidential at the time of such oral conveyance, shall be reduced to writing by the Discloser within forty-five (45) days thereafter, and shall be clearly marked with a confidential or proprietary legend.

10.2 Use and Protection of Information. Recipient agrees to protect such Information of the Discloser provided to Recipient from whatever source from distribution, disclosure or dissemination to anyone except employees of Recipient with a need to know such Information solely in conjunction with Recipient's analysis of the Information and for no other purpose except as authorized herein or as otherwise authorized in writing by the Discloser. Recipient will not make any copies of the Information inspected by it.

10.3 Exceptions. Recipient will not have an obligation to protect any portion of the Information which:
(a) is made publicly available by the Discloser or lawfully by a nonparty to this Agreement; (b) is lawfully obtained by Recipient from any source other than Discloser; (c) is previously known to Recipient without an obligation to keep it confidential; or (d) is released from the terms of this Agreement by Discloser upon written notice to Recipient.

10.4 Recipient agrees to use the Information solely for the purposes of negotiations pursuant to 47 U.S.C. 251 or in performing its obligations under this Agreement and for no other entity or purpose, except as may be otherwise agreed to in writing by the Parties. Nothing herein shall prohibit Recipient from providing information requested by the Federal Communications Commission or a state regulatory agency with jurisdiction over this matter, or to support a request for arbitration or an allegation of failure to negotiate in good faith.

10.5 Recipient agrees not to publish or use the Information for any advertising, sales promotions, press releases, or publicity matters that refer either directly or indirectly to the Information or to the Discloser or any of its affiliated companies.

10.6 The disclosure of Information neither grants nor implies any license to the Recipient under any trademark, patent, copyright, or application which is now or may hereafter be owned by the Discloser.

10.7 Survival of Confidentiality Obligations. The Parties' rights and obligations under this Section 10 shall survive and continue in effect until two (2) years after the expiration or termination date of this Agreement with regard to all Information exchanged during the term of this Agreement. Thereafter, the Parties' rights and obligations hereunder survive and continue in effect with respect to any Information that is a trade secret under applicable law.

11. Assignments

Any assignment by either Party to any non-affiliated entity of any right, obligation or duty, or of any other interest hereunder, in whole or in part, without the prior written consent of the other Party shall be void. A Party may assign this Agreement or any right, obligation, duty or other interest hereunder to an Affiliate of the Party without the consent of the other Party; provided, however, that the assigning Party shall notify the other Party in writing of such assignment thirty (30) days prior to the Effective Date thereof and, provided further, if the assignee is an assignee of API, the assignee must provide evidence of Commission CLEC certification. The Parties shall amend this Agreement to reflect such assignments and shall work cooperatively to implement any changes required due to such assignment. All obligations and duties of any Party under this Agreement shall be binding on all successors in interest and assigns of such Party. No assignment or delegation hereof shall relieve the assignor of its obligations under this Agreement in the event that the assignee fails to perform such obligations.

12. Resolution of Disputes

Except as otherwise stated in this Agreement, if any dispute arises as to the interpretation of any provision of this Agreement or as to the proper implementation of this Agreement, the aggrieved Party shall petition the Commission for a resolution of the dispute. However, each Party reserves any rights it may have to seek judicial review of any ruling made by the Commission concerning this Agreement.

13. Taxes

13.1 Definition. For purposes of this Section, the terms “taxes” and “fees” shall include but not limited to federal, state or local sales, use, excise, gross receipts or other taxes or tax-like fees of whatever nature and however designated (including tariff surcharges and any fees, charges or other payments, contractual or otherwise, for the use of public streets or rights of way, whether designated as franchise fees or otherwise) imposed, or sought to be imposed, on or with respect to the services furnished hereunder or measured by the charges or payments therefore, excluding any taxes levied on income.

13.2 Taxes and Fees Imposed Directly On Either Providing Party or Purchasing Party.

13.2.1 Taxes and fees imposed on the providing Party, which are not permitted or required to be passed on by the providing Party to its customer, shall be borne and paid by the providing Party.

13.2.2 Taxes and fees imposed on the purchasing Party, which are not required to be collected and/or remitted by the providing Party, shall be borne and paid by the purchasing Party.

13.3 Taxes and Fees Imposed on Purchasing Party But Collected And Remitted By Providing Party.

13.3.1 Taxes and fees imposed on the purchasing Party shall be borne by the purchasing Party, even if the obligation to collect and/or remit such taxes or fees is placed on the providing Party.

13.3.2 To the extent permitted by applicable law, any such taxes and/or fees shall be shown as separate items on applicable billing documents between the Parties. Notwithstanding the foregoing, the purchasing Party shall remain liable for any such taxes and fees regardless of whether they are actually billed by the providing Party at the time that the respective service is billed.

13.3.3 If the purchasing Party determines that in its opinion any such taxes or fees are not payable, the providing Party shall not bill such taxes or fees to the purchasing Party if the purchasing Party provides written certification, reasonably satisfactory to the providing Party, stating that it is exempt or otherwise not subject to the tax or fee, setting forth the basis therefor, and satisfying any other requirements under applicable law. If any authority seeks to collect any such tax or fee that the purchasing Party has determined and certified not to be payable, or any such tax or fee that was not billed by the providing Party, the purchasing Party may contest the same in good faith, at its own expense. In any such contest, the purchasing Party shall promptly furnish the providing Party with copies of all filings in any proceeding, protest, or legal challenge, all rulings issued in connection therewith, and all correspondence between the purchasing Party and the taxing authority.

13.3.4 In the event that all or any portion of an amount sought to be collected must be paid in order to contest the imposition of any such tax or fee, or to avoid the existence of a lien on the assets of the providing Party during the pendency of such contest, the purchasing Party shall be responsible for such payment and shall be entitled to the benefit of any refund or recovery.

13.3.5 If it is ultimately determined that any additional amount of such a tax or fee is due to the imposing authority, the purchasing Party shall pay such additional amount, including any interest and penalties thereon.

13.3.6 Notwithstanding any provision to the contrary, the purchasing Party shall protect, indemnify and hold harmless (and defend at the purchasing Party's expense) the providing Party from and against any such tax or fee, interest or penalties thereon, or other charges or payable expenses (including reasonable attorney fees) with respect thereto, which are incurred by the providing Party in connection with any claim for or contest of any such tax or fee.

13.3.7 Each Party shall notify the other Party in writing of any assessment, proposed assessment or other claim for any additional amount of such a tax or fee by a taxing authority; such notice to be provided, if possible, at least ten (10) days prior to the date by which a response, protest or other appeal must be filed, but in no event later than thirty (30) days after receipt of such assessment, proposed assessment or claim.

13.4 Taxes and Fees Imposed on Providing Party But Passed On To Purchasing Party.

13.4.1 Taxes and fees imposed on the providing Party, which are permitted or required to be passed on by the providing Party to its customer, shall be borne by the purchasing Party.

13.4.2 To the extent permitted by applicable law, any such taxes and/or fees shall be shown as separate items on applicable billing documents between the Parties. Notwithstanding the foregoing, the purchasing Party shall remain liable for any such taxes and fees regardless of whether they are actually billed by the providing Party at the time that the respective service is billed.

13.4.3 If the purchasing Party disagrees with the providing Party's determination as to the application or basis for any such tax or fee, the Parties shall consult with respect to the imposition and billing of such tax or fee. Notwithstanding the foregoing, the providing Party shall retain ultimate responsibility for determining whether and to what extent any such taxes or fees are applicable, and the purchasing Party shall abide by such determination and pay such taxes or fees to the providing Party. The providing Party shall further retain ultimate responsibility for determining whether and how to contest the imposition of such taxes and fees; provided, however, that any such contest undertaken at the request of the purchasing Party shall be at the purchasing Party's expense.

13.4.4 In the event that all or any portion of an amount sought to be collected must be paid in order to contest the imposition of any such tax or fee, or to avoid the existence of a lien on the assets of the providing Party during the pendency of such contest, the purchasing Party shall be responsible for such payment and shall be entitled to the benefit of any refund or recovery.

13.4.5 If it is ultimately determined that any additional amount of such a tax or fee is due to the imposing authority, the purchasing Party shall pay such additional amount, including any interest and penalties thereon.

13.4.6 Notwithstanding any provision to the contrary, the purchasing Party shall protect indemnify and hold harmless (and defend at the purchasing Party's expense) the providing Party from and against any such tax or fee, interest or penalties thereon, or other reasonable charges or payable expenses (including reasonable attorney

fees) with respect thereto, which are incurred by the providing Party in connection with any claim for or contest of any such tax or fee.

13.4.7 Each Party shall notify the other Party in writing of any assessment, proposed assessment or other claim for any additional amount of such a tax or fee by a taxing authority; such notice to be provided, if possible, at least ten (10) days prior to the date by which a response, protest or other appeal must be filed, but in no event later than thirty (30) days after receipt of such assessment, proposed assessment or claim.

13.5 Mutual Cooperation. In any contest of a tax or fee by one Party, the other Party shall cooperate fully by providing records, testimony and such additional information or assistance as may reasonably be necessary to pursue the contest. Further, the other Party shall be reimbursed for any reasonable and necessary out-of-pocket copying and travel expenses incurred in assisting in such contest.

14. Force Majeure

In the event performance of this Agreement, or any obligation hereunder, is either directly or indirectly prevented, restricted, or interfered with by reason of fire, flood, earthquake or like acts of God, wars, revolution, civil commotion, explosion, acts of public enemy, embargo, acts of the government in its sovereign capacity, labor difficulties, including without limitation, strikes, slowdowns, picketing, or boycotts, unavailability of equipment from vendor, changes requested by Customer, or any other circumstances beyond the reasonable control and without the fault or negligence of the Party affected, the Party affected, upon giving prompt notice to the other Party, shall be excused from such performance on a day-to-day basis to the extent of such prevention, restriction, or interference (and the other Party shall likewise be excused from performance of its obligations on a day-to-day basis until the delay, restriction or interference has ceased); provided however, that the Party so affected shall use diligent efforts to avoid or remove such causes of non-performance and both Parties shall proceed whenever such causes are removed or cease.

15. Adoption of Agreements

BellSouth shall make available, pursuant to 47 USC § 252 and the FCC rules and regulations regarding such availability, to API any interconnection, service, or network element provided under any other agreement filed and approved pursuant to 47 USC § 252, provided a minimum of six months remains on the term of such Agreement. The Parties shall adopt all rates, terms and conditions concerning such other interconnection, service or network element and any other rates, terms and conditions that are legitimately related to or were negotiated in exchange for or in conjunction with the interconnection, service or network element being adopted. The adopted interconnection, service, or network element and agreement shall apply to the same states as such other agreement. The term of the adopted agreement or

provisions shall expire on the same date as set forth in the agreement which was adopted.

16. Modification of Agreement

16.1 If API changes its name or makes changes to its company structure or identity due to a merger, acquisition, transfer or any other reason, it is the responsibility of API to notify BellSouth of said change and request that an amendment to this Agreement, if necessary, be executed to reflect said change.

16.2 No modification, amendment, supplement to, or waiver of the Agreement or any of its provisions shall be effective and binding upon the Parties unless it is made in writing and duly signed by the Parties.

16.3 In the event that any effective legislative, regulatory, judicial or other legal action materially affects any material terms of this Agreement, or the ability of API or BellSouth to perform any material terms of this Agreement, API or BellSouth may, on thirty (30) days' written notice require that such terms be renegotiated, and the Parties shall renegotiate in good faith such mutually acceptable new terms as may be required. In the event that such new terms are not renegotiated within ninety (90) days after such notice, the Dispute shall be referred to the Dispute Resolution procedure set forth in this Agreement.

16.4 Notwithstanding anything to the contrary in this Agreement, this Agreement shall not be amended or modified after the expiration date hereof as set forth in Section 2 above.

17. Non-waiver of Legal Rights

Execution of this Agreement by either Party does not confirm or infer that the executing Party agrees with any decision(s) issued pursuant to the Telecommunications Act of 1996 and the consequences of those decisions on specific language in this Agreement. Neither Party waives its rights to appeal or otherwise challenge any such decision(s) and each Party reserves all of its rights to pursue any and all legal and/or equitable remedies, including appeals of any such decision(s).

18. Severability

If any provision of this Agreement, or the application of such provision to either Party or circumstance, shall be held invalid, the remainder of the Agreement, or the application of any such provision to the Parties or circumstances other than those to which it is held invalid, shall not be affected thereby, provided that the Parties shall attempt to reformulate such invalid provision to give effect to such portions thereof as may be valid without defeating the intent of such provision.

19. Waivers

A failure or delay of either Party to enforce any of the provisions hereof, to exercise any option which is herein provided, or to require performance of any of the provisions hereof shall in no way be construed to be a waiver of such provisions or options, and each Party, notwithstanding such failure, shall have the right thereafter to insist upon the performance of any and all of the provisions of this Agreement.

20. Governing Law

This Agreement shall be governed by, and construed and enforced in accordance with, the laws of the State of Georgia, without regard to its conflict of laws principles.

21. Arm's Length Negotiations

This Agreement was executed after arm's length negotiations between the undersigned Parties and reflects the conclusion of the undersigned that this Agreement is in the best interests of all Parties.

22. Notices

22.1 Every notice, consent, approval, or other communications required or contemplated by this Agreement shall be in writing and shall be delivered by hand, by overnight courier or by US mail postage prepaid, address to:

BellSouth Telecommunications, Inc.

Account Team
600 North 19th Street
Birmingham, Alabama 35203

and

General Attorney - COU
Suite 4300
675 W. Peachtree St.
Atlanta, GA 30375

Access Point, Inc.

Richard E. Brown-CEO
1100 Crescent Green, Suite 109
Cary, NC 27511

or at such other address as the intended recipient previously shall have designated by written notice to the other Party.

22.2 Unless otherwise provided in this Agreement, notice by mail shall be effective on the date it is officially recorded as delivered by return receipt or equivalent, and in the absence of such record of delivery, it shall be presumed to have been delivered the fifth day, or next business day after the fifth day, after it was deposited in the mails.

22.3 Notwithstanding the foregoing, BellSouth may provide API notice via Internet posting of price changes, changes to the terms and conditions of services available for resale per Commission Orders. BellSouth will also post changes to business processes and policies, notices of new service offerings, and changes to service offerings not requiring an amendment to this Agreement, notices required to be posted to BellSouth's website, and any other information of general applicability to CLECs.

23. Rule of Construction

No rule of construction requiring interpretation against the drafting Party hereof shall apply in the interpretation of this Agreement.

24. Headings of No Force or Effect

The headings of Articles and Sections of this Agreement are for convenience of reference only, and shall in no way define, modify or restrict the meaning or interpretation of the terms or provisions of this Agreement.

25. Multiple Counterparts

This Agreement may be executed multiple counterparts, each of which shall be deemed an original, but all of which shall together constitute but one and the same document.

26. Implementation of Agreement

If API is a facilities based provider or a facilities based and resale provider, this section shall apply. Within 60 days of the execution of this Agreement, the Parties may adopt a schedule for the implementation of the Agreement. The schedule shall state with specificity time frames for submission of including but not limited to, network design, interconnection points, collocation arrangement requests, pre-sales testing and full operational time frames for the business and residential markets. An implementation template which may be used for the implementation schedule is contained in Attachment 10 of this Agreement.

27. Filing of Agreement

27.1 Upon execution of this Agreement it shall be filed with the appropriate state regulatory agency pursuant to the requirements of Section 252 of the Act, and the Parties shall share equally any filing fees therefor. If the regulatory agency imposes any filing or public interest notice fees regarding the filing or approval of the Agreement, API shall be responsible for publishing the required notice and the publication and/or notice costs shall be borne by API. Notwithstanding the foregoing, this Agreement shall not be submitted for approval by the appropriate state regulatory agency unless and until such time as API is duly certified as a local exchange carrier in such state, except as otherwise required by a state Commission.

27.2 For electronic filing purposes in the State of Louisiana, the CLEC Louisiana Certification Number is required and must be provided by API prior to filing of the Agreement. The CLEC Louisiana Certification Number for API is _____.

28. Compliance with Applicable Law

Each Party shall comply at its own expense with Applicable Law.

29. Necessary Approvals

Each Party shall be responsible for obtaining and keeping in effect all approvals from, and rights granted by, governmental authorities, building and property owners, other carriers, and any other persons that may be required in connection with the performance of its obligations under this Agreement. Each Party shall reasonably cooperate with the other Party in obtaining and maintaining any required approvals and rights for which such Party is responsible.

30. Good Faith Performance

Each Party shall act in good faith in its performance under this Agreement and, in each case in which a Party's consent or agreement is required or requested hereunder, such Party shall not unreasonably withhold or delay such consent or agreement.

31. Nonexclusive Dealings

This Agreement does not prevent either Party from providing or purchasing services to or from any other person nor, except as provided in Section 252(i) of the Act, does it obligate either Party to provide or purchase any services (except insofar as the Parties are obligated to provide access to Interconnection, services and Network Elements to API as a requesting carrier under the Act).

32. Survival

The Parties' obligations under this Agreement which by their nature are intended to continue beyond the termination or expiration of this Agreement shall survive the termination or expiration of this Agreement.

33. Entire Agreement

This Agreement and its Attachments, incorporated herein by this reference, sets forth the entire understanding and supersedes prior Agreements between the Parties relating to the subject matter contained herein and merges all prior discussions between them. Any orders placed under prior agreements between the Parties shall be governed by the terms of this Agreement. Neither Party shall be bound by any definition, condition, provision, representation, warranty, covenant or promise other than as expressly stated in this Agreement or as is contemporaneously or subsequently set forth in writing and executed by a duly authorized officer or representative of the Party to be bound thereby.

This Agreement may include attachments with provisions for the following services:

Network Elements and Other Services
Local Interconnection
Resale
Collocation

The following services are included as options for purchase by API. API may elect to purchase said services by written request to its Account Manager if applicable.

Optional Daily Usage File (ODUF)
Enhanced Optional Daily Usage File (EODUF)
Access Daily Usage File (ADUF)
Line Information Database (LIDB) Storage
Centralized Message Distribution Service (CMDS)
Calling Name (CNAM)
LNP Data Base Query Service

IN WITNESS WHEREOF, the Parties have executed this Agreement the day and year written below.

BellSouth Telecommunications, Inc.	**Access Point, Inc.**
By: on file	By: on file
Name: Christine Boltz	Name: Richard E. Brown
Title: Managing Director	Title: CEO
Date: 05/03/01	Date: 4/19/01

Attachment 1

Resale

TABLE OF CONTENTS

1. DISCOUNT RATES 3

2. DEFINITION OF TERMS 3

3. GENERAL PROVISIONS 3

4. BELLSOUTH'S PROVISION OF SERVICES TO API 7

5. MAINTENANCE OF SERVICES 8

6. ESTABLISHMENT OF SERVICE 9

7. PAYMENT AND BILLING ARRANGEMENTS 10

8. DISCONTINUANCE OF SERVICE 13

9. LINE INFORMATION DATABASE (LIDB) 14

10. RAO HOSTING…… 14

11. OPTIONAL DAILY USAGE FILE (ODUF) 14

12. ENHANCED OPTIONAL DAILY USAGE FILE (EODUF) 15

Exhibit A – Applicable Discounts/OSS Rates 16

Exhibit B – Resale Restrictions 19

Exhibit C – Line Information Database (LIDB) Storage Agreement 20

Exhibit D – Optional Daily Usage File (ODUF) 25

Exhibit E – Enhanced Option Daily Usage File (EODUF) 29

Exhibit F – ODUF/EODUF/CMDS Rates ..... Rate Table

RESALE

1. Discount Rates

The discount rates applied to API purchases of BellSouth Telecommunications Services for the purpose of resale shall be as set forth in Exhibit A. Such discounts have been determined by the applicable Commission to reflect the costs avoided by BellSouth when selling a service for wholesale purposes.

2. Definition of Terms

2.1 COMPETITIVE LOCAL EXCHANGE COMPANY (CLEC) means a telephone company certificated by the Commission to provide local exchange service within BellSouth's franchised area.

2.2 CUSTOMER OF RECORD means the entity responsible for placing application for service; requesting additions, rearrangements, maintenance or discontinuance of service; payment in full of charges incurred such as non-recurring, monthly recurring, toll, directory assistance, etc.

2.3 DEPOSIT means assurance provided by a customer in the form of cash, surety bond or bank letter of credit to be held by BellSouth.

2.4 END USER means the ultimate user of the Telecommunications Service.

2.5 END USER CUSTOMER LOCATION means the physical location of the premises where an End User makes use of the telecommunications services.

2.6 NEW SERVICES means functions, features or capabilities that are not currently offered by BellSouth. This includes packaging of existing services or combining a new function, feature or capability with an existing service.

2.7 RESALE means an activity wherein a certificated CLEC, such as API, subscribes to the telecommunications services of BellSouth and then offers those telecommunications services to the public.

3. General Provisions

3.1 All of the negotiated rates, terms and conditions set forth in this Attachment pertain to the resale of BellSouth’s retail telecommunications services and other services specified in this Attachment. Subject to effective and applicable FCC and Commission rules and orders, BellSouth shall make available to API for

resale those telecommunications services BellSouth makes available, pursuant to its General Subscriber Services Tariff and Private Line Services Tariff, to customer who are not telecommunications carriers. Such services shall be available at BellSouth's tariffed rates less the discount set forth in Exhibit A to this Agreement and subject to the exclusions and limitations set forth in Exhibit B to this Agreement.

3.2 API may purchase resale services from BellSouth for their own use in operating their business. The resale discount will apply to those services under the following conditions:

3.2.1 API must resell services to other End Users.

3.2.2 API must order services through resale interfaces, i.e., the Local Carrier Service Center (LCSC) and/or appropriate Resale Account Teams pursuant to Section 3 of the General Terms and Conditions.

3.2.3 API cannot be a competitive local exchange telecommunications company for the single purpose of selling to themselves.

3.3 API will be the customer of record for all services purchased from BellSouth. Except as specified herein, BellSouth will take orders from, bill and receive payment from API for said services.

3.4 API will be BellSouth's single point of contact for all services purchased pursuant to this Agreement. BellSouth shall have no contact with the End User except to the extent provided for herein. Each Party shall provide to the other a nation wide (50 states) toll-free contact number for purposes of repair and maintenance.

3.5 BellSouth will continue to bill the End User for any services that the End User specifies it wishes to receive directly from BellSouth. BellSouth maintains the right to serve directly any End User within the service area of API. BellSouth will continue to market directly its own telecommunications products and services and in doing so may establish independent relationships with End Users of API. Neither Party shall interfere with the right of any person or entity to obtain service directly from the other Party.

3.5.1 When a subscriber of API or BellSouth elects to change his/her carrier to the other Party, both Parties agree to release the subscriber's service to the other Party concurrent with the due date of the service order, which shall be established based on the standard interval for the subscriber's requested service as set forth in BellSouth Product and Services Interval Guide.

3.5.2 BellSouth and API will refrain from contacting subscribers who have placed or whose selected carrier has placed on their behalf an order to change his/her service provider from BellSouth or API to the other Party until such time that the order for service has been completed.

3.6 Current telephone numbers may normally be retained by the End User and are assigned to the service furnished. However, neither Party nor the End User has a property right to the telephone number or any other call number designation associated with services furnished by BellSouth, and no right to the continuance of service through any particular central office. BellSouth reserves the right to change such numbers, or the central office designation associated with such numbers, or both, whenever BellSouth deems it necessary to do so in the conduct of its business and in accordance with BellSouth practices and procedures on a nondiscriminatory basis.

3.7 For the purpose of the resale of BellSouth's telecommunications services by API, BellSouth will provide API with on line access to telephone numbers for reservation on a first come first served basis. Until December 1, 2000, such reservations of telephone numbers, on a pre-ordering basis shall be for a period of ninety (90) days. After December 1, 2000, BellSouth shall provide number reservation pursuant to the appropriate FCC rules and regulations. API acknowledges that there may be instances where there is a shortage of telephone numbers in a particular Common Language Location Identifier Code (CLLIC) and in such instances BellSouth may request that API cancel its reservations of numbers. API shall comply with such request.

3.8 Further, upon API's request, and for the purpose of the resale of BellSouth's telecommunications services by API, BellSouth will reserve up to 100 telephone numbers per CLLIC, for API's sole use. Until December 1, 2000, such telephone number reservations shall be valid for ninety (90) days from the reservation date. After December 1, 2000, BellSouth shall provide number reservation pursuant to the appropriate FCC rules and regulations. API acknowledges that there may be instances where there is a shortage of telephone numbers in a particular CLLIC and in such instances BellSouth shall use its best efforts to reserve for a ninety (90) day period a sufficient quantity of API's reasonable need in that particular CLLIC.

3.9 Service is furnished subject to the condition that it will not be used for any unlawful purpose.

3.10 Service will be discontinued if any law enforcement agency advises that the service being used is in violation of the law.

3.11 BellSouth can refuse service when it has grounds to believe that service will be used in violation of the law.

3.12 BellSouth will cooperate with law enforcement agencies with subpoenas and court orders relating to API's End Users, pursuant to Section 7 of the General Terms and Conditions.

3.13 If API or its End Users utilize a BellSouth resold telecommunications service in a manner other than that for which the service was originally intended as described in BellSouth's retail tariffs, API has the responsibility to notify BellSouth. BellSouth will only provision and maintain said service consistent with the terms and conditions of the tariff describing said service.

3.14 Facilities and/or equipment utilized by BellSouth to provide service to API remain the property of BellSouth.

3.15 White page directory listings for API End Users will be provided in accordance with Section 5 of the General Terms and Conditions.

3.16 BellSouth provides electronic access to customer record information. Access is provided through the Local Exchange Navigation System (LENS) and the Telecommunications Access Gateway (TAG). Customer Record Information includes but is not limited to, customer specific information in CRIS and RSAG. In addition, API shall provide to BellSouth access to customer record information including electronic access where available. Otherwise, upon request by BellSouth API shall provide paper copies of customer record information within a reasonable period of time. Customer Record Information is equivalent to but not limited to the type of customer specific information contained in CRIS and RSAG. The Parties agree not to view, copy, or otherwise obtain access to the customer record information of any customer without that customer's permission, and further agrees that API and BellSouth will obtain access to customer record information only in strict compliance with applicable laws, rules, or regulations of the State in which the service is provided.

3.17 All costs incurred by BellSouth to develop and implement operational interfaces shall be recovered from CLECs who utilize the interfaces. Charges for use of Operational Support Systems (OSS) shall be as set forth in Exhibit A of this Attachment.

3.18 Where available to BellSouth's End Users, BellSouth shall provide the following telecommunications services at a discount to allow for voice mail services**:**

- Message Waiting Indicator ("MWI"), stutter dialtone and message waiting light feature capabilities
- Call Forward Busy Line ("CF/B")
- Call Forward Don't Answer ("CF/DA")

Further, BellSouth messaging services set forth in BellSouth's Messaging Service Information Package shall be made available for resale without the wholesale discount.

3.19 BellSouth shall provide branding for, or shall unbrand, voice mail services for API per the Bona Fide Request/New Business Request process as set forth in Section 6 of the General Terms and Conditions.

3.20 BellSouth's Inside Wire Maintenance Service Plan is available for resale at rates, terms and conditions as set forth by BellSouth and without the wholesale discount.

3.21 In the event API acquires an end user whose service is provided pursuant to a BellSouth Special Assembly, BellSouth shall make available to API that Special Assembly at the wholesale discount at API's option. API shall be responsible for all terms and conditions of such Special Assembly including but not limited to termination liability if applicable.

3.22 BellSouth shall provide 911/E911 for API customers in the same manner that it is provided to BellSouth customers. BellSouth shall provide and validate API customer information to the PSAP. BellSouth shall use its service order process to update and maintain, on the same schedule that it uses for its customers, the API customer service information in the ALI/DMS (Automatic Location Identification/Location Information) databases used to support 911/E911 services.

3.23 BellSouth shall bill, and API shall pay, the End User line charge associated with implementing Number Portability as set forth in BellSouth's FCC No. 1 tariff. This charge is not subject to the wholesale discount.

3.24 Pursuant to 47 CFR Section 51.617, BellSouth will bill to API, and API shall pay, End User common line charges identical to the End User common line charges BellSouth bills its End Users.

4. BellSouth's Provision of Services to API

4.1 Resale of BellSouth services shall be as follows:

4.1.1 The resale of telecommunications services shall be limited to users and uses conforming to the class of service restrictions.

4.1.2 Hotel and Hospital PBX services are the only telecommunications services available for resale to Hotel/Motel and Hospital End Users, respectively. Similarly, Access Line Service for Customer Provided Coin Telephones is the only local service available for resale to Payphone Service Provider (PSP) customers. Shared Tenant Service customers can only be sold those local exchange access services available in BellSouth's A23 Shared Tenant Service Tariff in the states of Florida, Georgia, North Carolina and South Carolina, and in A27 in the states of Alabama, Kentucky, Louisiana, Mississippi and Tennessee.

4.1.3 BellSouth reserves the right to periodically audit services purchased by API to establish authenticity of use. Such audit shall not occur more than once in a calendar year. API shall make any and all records and data available to BellSouth or BellSouth's auditors on a reasonable basis. BellSouth shall bear the cost of said audit. Any information provided by API for purposes of such audit shall be deemed Confidential Information pursuant to the General Terms and Conditions of this Agreement.

4.2 Subject to Exhibit B hereto, resold services can only be used in the same manner as specified in BellSouth's Tariffs. Resold services are subject to the same terms and conditions as are specified for such services when furnished to an individual End User of BellSouth in the appropriate section of BellSouth's Tariffs. Specific tariff features (e.g. a usage allowance per month) shall not be aggregated across multiple resold services.

4.3 API may resell services only within the specific service area as defined in its certificate of operation approved by the Commission.

5. Maintenance of Services

5.1 API will adopt and adhere to the standards contained in the applicable BellSouth Operational Understanding regarding maintenance of service. The BellSouth Operational Understanding can be accessed via the internet @ http://www.interconnection.bellsouth.com.

5.2 Services resold pursuant to this Attachment and BellSouth's General Subscriber Service Tariff and Private Line Service Tariff and facilities and equipment provided by BellSouth shall be maintained by BellSouth.

5.3 API or its End Users may not rearrange, move, disconnect, remove or attempt to repair any facilities owned by BellSouth except with the written consent of BellSouth.

5.4 API accepts responsibility to notify BellSouth of situations that arise that may result in a service problem.

5.5 API will contact the appropriate repair centers in accordance with procedures established by BellSouth.

5.6 For all repair requests, API shall adhere to BellSouth's prescreening guidelines prior to referring the trouble to BellSouth.

5.7 BellSouth will bill API for handling troubles that are found not to be in BellSouth's network pursuant to its standard time and material charges. The

standard time and material charges will be no more than what BellSouth charges to its retail customers for the same services.

5.8 BellSouth reserves the right to contact API's End Users, if deemed necessary, for maintenance purposes.

6. Establishment of Service

6.1 After receiving certification as a local exchange company from the appropriate regulatory agency, API will provide the appropriate BellSouth service center the necessary documentation to enable BellSouth to establish a master account for API's resold services. Such documentation shall include the Application for Master Account, proof of authority to provide telecommunications services, an Operating Company Number ("OCN") assigned by the National Exchange Carriers Association ("NECA") and a tax exemption certificate, if applicable. When necessary deposit requirements are met, as described in Section 6.6 below, BellSouth will begin taking orders for the resale of service.

6.2 Service orders will be in a standard format designated by BellSouth.

6.3 API shall provide to BellSouth a blanket letter of authorization ("LOA") certifying that API will have End User authorization prior to viewing the End User's customer service record or switching the End User's service. BellSouth will not require End User confirmation prior to establishing service for API's End User customer. API must, however, be able to demonstrate End User authorization upon request.

6.4 BellSouth will accept a request directly from the End User for conversion of the End User's service from API to BellSouth or will accept a request from another CLEC for conversion of the End User's service from API to such other CLEC. Upon completion of the conversion BellSouth will notify API that such conversion has been completed.

6.5 If BellSouth is informed that an unauthorized change in local service to API has occurred, BellSouth will reestablish service with the appropriate local service provider and will assess API as the CLEC initiating the alleged unauthorized change, the unauthorized change charge described in FCC Tariff No. 1, Section 13 or applicable state tariff. Appropriate nonrecurring charges, as set forth in Section A4 of the General Subscriber Service Tariff, will also be assessed to API. In accordance with FCC Slamming Liability Rules, the relevant governmental agency will determine if an unauthorized change has occurred. Resolution of all relevant issues shall be handled directly with the authorized CLEC and API.

6.6 BellSouth reserves the right to secure the account with a suitable form of security deposit, unless satisfactory credit has already been established.

6.6.1 Such security deposit shall take the form of cash for cash equivalent, an irrevocable Letter of Credit or other forms of security acceptable to BellSouth. Any such security deposit may be held during the continuance of the service as security for the payment of any and all amounts accruing for the service.

6.6.2 If a security deposit is required, such security deposit shall be made prior to the inauguration of service.

6.6.3 Such security deposit shall be two months' estimated billing.

6.6.4 The fact that a security deposit has been made in no way relieves API from complying with BellSouth's regulations as to advance payments and the prompt payment of bills on presentation nor does it constitute a waiver or modification of the regular practices of BellSouth providing for the discontinuance of service for non-payment of any sums due BellSouth.

6.6.5 BellSouth reserves the right to increase the security deposit requirements when, in its reasonable judgment, changes in API's financial status so warrant and/or gross monthly billing has increased beyond the level initially used to determine the security deposit.

6.6.6 In the event service to API is terminated due to API's default on its account, any security deposits held will be applied to API's account.

6.6.7 Interest on a cash or cash equivalent security deposit shall accrue and be paid in accordance with the terms in the appropriate BellSouth tariff.

7. Payment And Billing Arrangements

7.1 Prior to submitting orders to BellSouth for local service, a master account must be established for API. API is required to provide the following before a master account is established: proof of PSC/PUC certification, the Application for Master Account, an Operating Company Number (“OCN”) assigned by the National Exchange Carriers Association (“NECA”) and a tax exemption certificate, if applicable.

7.2 BellSouth shall bill API on a current basis all applicable charges and credits.

7.3 Payment of all charges will be the responsibility of API. API shall make payment to BellSouth for all services billed. BellSouth is not responsible for payments not received by API from API's End User. BellSouth will not become involved in billing disputes that may arise between API and its End User. Payments made to BellSouth as payment on account will be credited to an accounts receivable master account and not to an End User's account.

7.4 BellSouth will render bills each month on established bill days for each of API's accounts.

7.5 BellSouth will bill API in advance for all services to be provided during the ensuing billing period except charges associated with service usage, which will be billed in arrears. Charges will be calculated on an individual End User account level, including, if applicable, any charge for usage or usage allowances. BellSouth will also bill API, and API will be responsible for and remit to BellSouth, all charges applicable to resold services including but not limited to 911 and E911 charges, End Users common line charges, federal subscriber line charges, telecommunications relay charges (TRS), and franchise fees.

7.6 The payment will be due by the next bill date (i.e., same date in the following month as the bill date) and is payable in immediately available funds. Payment is considered to have been made when received by BellSouth.

7.6.1 If the payment due date falls on a Sunday or on a Holiday which is observed on a Monday, the payment due date shall be the first non-Holiday day following such Sunday or Holiday. If the payment due date falls on a Saturday or on a Holiday which is observed on Tuesday, Wednesday, Thursday, or Friday, the payment due date shall be the last non-Holiday day preceding such Saturday or Holiday. If payment is not received by the payment due date, a late payment charge, as set forth in section 7.8 following, shall apply.

7.6.2 If API requests multiple billing media or additional copies of bills, BellSouth will provide these at an appropriate charge to API.

7.6.3 Billing Disputes

7.6.3.1 Each Party agrees to notify the other Party upon the discovery of a billing dispute. In the event of a billing dispute, the Parties will endeavor to resolve the dispute within sixty (60) calendar days of the Bill Date on which such disputed charges appear. Resolution of the dispute is expected to occur at the first level of management resulting in a recommendation for settlement of the dispute and closure of a specific billing period. If the issues are not resolved within the allotted time frame, the following resolution procedure will begin:

7.6.3.2 If the dispute is not resolved within sixty (60) days of the Bill Date, the dispute will be escalated to the second level of management for each of the respective Parties for resolution. If the dispute is not resolved within ninety (90) days of the Bill Date, the dispute will be escalated to the third level of management for each of the respective Parties for resolution

7.6.3.3 If the dispute is not resolved within one hundred and twenty (120) days of the Bill Date, the dispute will be escalated to the fourth level of management for each of the respective Parties for resolution.

7.6.3.4 If a Party disputes a charge and does not pay such charge by the payment due date, such charges shall be subject to late payment charges as set forth in the Late Payment Charges provision of this Attachment. If a Party disputes charges and the dispute is resolved in favor of such Party, the other Party shall credit the bill of the disputing Party for the amount of the disputed charges along with any late payment charges assessed no later than the second Bill Date after the resolution of the dispute. Accordingly, if a Party disputes charges and the dispute is resolved in favor of the other Party, the disputing Party shall pay the other Party the amount of the disputed charges and any associated late payment charges assessed no later than the second bill payment due date after the resolution of the dispute. BellSouth shall only assess interest on previously assessed late payment charges in a state where it has authority pursuant to its tariffs.

7.7 Upon proof of tax exempt certification from API, the total amount billed to API will not include any taxes due from the End User to reflect the tax exempt certification and local tax laws. API will be solely responsible for the computation, tracking, reporting, and payment of taxes applicable to API's End User.

7.8 If any portion of the payment is received by BellSouth after the payment due date as set forth preceding, or if any portion of the payment is received by BellSouth in funds that are not immediately available to BellSouth, then a late payment charge shall be due to BellSouth. The late payment charge shall be the portion of the payment not received by the payment due date times a late factor and will be applied on a per bill basis. The late factor shall be as set forth in Section A2 of the General Subscriber Services Tariff or Section B2 of the Private Line Service Tariff, as applicable. API will be charged a fee for all returned checks as set forth in Section to A2 of the General Subscriber Services Tariff or in applicable state law.

7.9 Any switched access charges associated with interexchange carrier access to the resold local exchange lines will be billed by, and due to, BellSouth.

7.10 BellSouth will not perform billing and collection services for API as a result of the execution of this Agreement. All requests for billing services should be referred to the appropriate entity or operational group within BellSouth.

7.11 In general, BellSouth will not become involved in disputes between API and API's End User customers relating to resold services. If a dispute does arise that cannot be settled without the involvement of BellSouth, API shall contact the designated Service Center for resolution. BellSouth will assist in the resolution of the dispute and will work with API to resolve the matter in as timely a manner as possible. API may be required to submit documentation to substantiate the claim.

8. Discontinuance of Service

8.1 The procedures for discontinuing service to an End User are as follows:

8.1.1 BellSouth will deny service to API's End User on behalf of, and at the request of, API. Upon restoration of the End User's service, restoral charges will apply and will be the responsibility of API.

8.1.2 At the request of API, BellSouth will disconnect a API End User customer.

8.1.3 All requests by API for denial or disconnection of an End User for nonpayment must be in writing.

8.1.4 API will be made solely responsible for notifying the End User of the proposed disconnection of the service.

8.1.5 BellSouth will continue to process calls made to the Annoyance Call Center and will advise API when it is determined that annoyance calls are originated from one of its End User's locations. BellSouth shall be indemnified, defended and held harmless by API and/or the End User against any claim, loss or damage arising from providing this information to API. It is the responsibility of API to take the corrective action necessary with its End Users who make annoying calls. (Failure to do so will result in BellSouth's disconnecting the End User's service.)

8.1.6 BellSouth may disconnect and reuse facilities when the facility is in a denied state and BellSouth has received an order to establish new service or transfer of service from an End User or an End User's CLEC at the same address served by the denied facility.

8.2 The procedures for discontinuing service to API are as follows:

8.2.1 BellSouth reserves the right to suspend or terminate service in the event of prohibited, unlawful or improper use of the facilities or service, abuse of the facilities, or any other violation or noncompliance by API of the rules and regulations of BellSouth's Tariffs.

8.2.2 BellSouth reserves the right to suspend or terminate service for nonpayment. If payment of account is not received by the bill day in the month after the original bill day, BellSouth may provide written notice to API, that additional applications for service will be refused and that any pending orders for service will not be completed if payment is not received by the fifteenth day following the date of the notice. In addition BellSouth may, at the same time, provide written notice to the person designated by API to receive notices of noncompliance that BellSouth may discontinue the provision of existing services to API, if payment is not received by the thirtieth day following the date of the notice.

8.2.3 In the case of such discontinuance, all billed charges, as well as applicable termination charges, shall become due.

8.2.4 If BellSouth does not discontinue the provision of the services involved on the date specified in the thirty days notice and API's noncompliance continues, nothing contained herein shall preclude BellSouth's right to discontinue the provision of the services to API without further notice.

8.2.5 Upon discontinuance of service on a API's account, service to API's End Users will be denied. BellSouth will also reestablish service at the request of the End User or API upon payment of the appropriate connection fee and subject to BellSouth's normal application procedures. API is solely responsible for notifying the End User of the proposed disconnection of the service.

8.2.6 If within fifteen days after an End User's service has been denied no contact has been made in reference to restoring service, the End User's service will be disconnected.

9. Line Information Database (LIDB)

9.1 BellSouth will store in its Line Information Database (LIDB) records relating to service only in the BellSouth region. The LIDB Storage Agreement is included in this Attachment as Exhibit C.

9.2 BellSouth will provide LIDB Storage upon written request to API's Account Manager stating a requested activation date.

10. RAO Hosting

10.1 RAO Hosting is not required for resale in the BellSouth region.

11. Optional Daily Usage File (ODUF)

11.1 The Optional Daily Usage File (ODUF) Agreement with terms and conditions is included in this Attachment as Exhibit D. Rates for ODUF are as set forth in Exhibit F of this Attachment.

11.2 BellSouth will provide ODUF service upon written request to its Account Manager stating a requested activation date.

12. Enhanced Optional Daily Usage File (EODUF)

12.1 The Enhanced Optional Daily Usage File (EODUF) service Agreement with terms and conditions is included in this Attachment as Exhibit E. Rates for EODUF are as set forth in Exhibit F of this Attachment.

12.2 BellSouth will provide EODUF service upon written request to its Account Manager stating a requested activation date.

APPLICABLE DISCOUNTS

The telecommunications services available for purchase by API for the purposes of resale to API End Users shall be available at the following discount off of the retail rate. If API cancels an order for telecommunications services for the purpose of resale, any costs incurred by BellSouth in conjunction with the provisioning of that order will be recovered in accordance with the applicable sections of the GSST and the PLST.

DISCOUNT*

STATE	RESIDENCE	BUSINESS	CSAs***
ALABAMA	16.3%	16.3%	
FLORIDA	21.83%	16.81%	
GEORGIA	20.3%	17.3%	
KENTUCKY	16.79%	15.54%	
LOUISIANA	20.72%	20.72%	9.05%
MISSISSIPPI	15.75%	15.75%	
NORTH CAROLINA	21.5%	17.6%	
SOUTH CAROLINA	14.8%	14.8%	8.98%
TENNESSEE**	16%	16%	

* When a CLEC provides Resale service in a cross boundary area (areas that are part of the local serving area of another state's exchange) the rates, regulations and discounts for the tariffing state will apply. Billing will be from the serving state.

** In Tennessee, if API provides its own operator services and directory services, the discount shall be 21.56%. API must provide written notification to BellSouth within 30 days prior to providing its own operator services and directory services to qualify for the higher discount rate of 21.56%.

*** Unless noted in this column, the discount for Business will be the applicable discount rate for CSAs.

OPERATIONAL SUPPORT SYSTEMS (OSS) RATES

BellSouth has developed and made available the following mechanized systems by which API may submit LSRs electronically.

LENS	Local Exchange Navigation System
EDI	Electronic Data Interchange
TAG	Telecommunications Access Gateway

LSRs submitted by means of one of these interactive interfaces will incur an OSS electronic ordering charge as specified in the Table below. An individual LSR will be identified for billing purposes by its Purchase Order Number (PON). LSRs submitted by means other than one of these interactive interfaces (mail, fax, courier, etc.) will incur a manual order charge as specified in the table below:

OPERATIONAL SUPPORT SYSTEMS (OSS) RATES	**Electronic** **Per LSR received from the CLEC by one of the OSS interactive interfaces**	**Manual** **Per LSR received from the CLEC by means other than one of the OSS interactive interfaces**
OSS LSR Charge	**$3.50**	**$19.99**
USOC	**SOMEC**	**SOMAN**

Note: In addition to the OSS charges, applicable discounted service order and related discounted charges apply per the tariff.

Denial/Restoral OSS Charge

In the event API provides a list of customers to be denied and restored, rather than an LSR, each location on the list will require a separate PON and, therefore will be billed as one LSR per location.

Cancellation OSS Charge

API will incur an OSS charge for an accepted LSR that is later canceled by API.

Note: Supplements or clarifications to a previously billed LSR will not incur another OSS charge.

Threshold Billing Plan

API will incur the mechanized rate for all LSRs, both mechanized and manual, if the percentage of mechanized LSRs to total LSRs meets or exceeds the threshold percentages shown below:

Year	Ratio: Mechanized/Total LSRs
2000	80%
2001	90%

The threshold plan will be discontinued in 2002.

BellSouth will track the total LSR volume for each CLEC for each quarter. At the end of that time period, a Percent Electronic LSR calculation will be made for that quarter based on the LSR data tracked in the LCSC. If this percentage exceeds the threshold volume, all of that CLEC's future manual LSRs for the following quarter will be billed at the mechanized LSR rate. To allow time for obtaining and analyzing the data and updating the billing system, this billing change will take place on the first day of the second month following the end of the quarter (e.g. May 1 for 1Q, Aug 1 for 2Q, etc.). There will be no adjustments to the amount billed for previously billed LSRs.

Exclusions and Limitations
On Services Available for Resale

	Type of Service	AL		FL		GA		KY		LA		MS		NC		SC		TN	
		Resale	Discount	Resale	Discount	Resale	Discount	Resale	Discount	Resale	Discount	Resale	Discount	Resale	Discount	Resale	Discount	Resale	Discount
1	Grandfathered Services (Note 1)	Yes	Yes	Yes	Yes	Yes	Yes	Yes	Yes	Yes	Yes	Yes	Yes	Yes	Yes	Yes	Yes	Yes	Yes
2	Promotions - > 90 Days(Note 2)	Yes	Yes	Yes	Yes	Yes	Yes	Yes	Yes	Yes	Yes	Yes	Yes	Yes	Yes	Yes	Yes	Yes	Note 3
3	Promotions - ≤ 90 Days (Note 2)	Yes	No	Yes	No	Yes	No	Yes	No	Yes	No	Yes	No	Yes	No	Yes	No	Yes	No
4	Lifeline/Link Up Services	Yes	Yes	Yes	Yes	Yes	Yes	Yes	Note 4	Yes	Yes	Yes	Yes	Yes	Yes	Yes	Yes	Yes	Yes
5	911/E911 Services	Yes	Yes	Yes	Yes	Yes	Yes	Yes	Yes	No	No	Yes	Yes	Yes	Yes	Yes	Yes	Yes	Yes
6	N11 Services	Yes	Yes	Yes	Yes	Yes	Yes	No	No	No	No	Yes	Yes	Yes	Yes	No	No	Yes	Yes
7	MemoryCall®Service	Yes	No	Yes	No	Yes	No	Yes	No	Yes	No	Yes	No	Yes	No	Yes	No	Yes	No
8	Mobile Services	Yes	No	Yes	No	Yes	No	Yes	No	Yes	No	Yes	No	Yes	No	Yes	No	Yes	No
9	Federal Subscriber Line Charges	Yes	No	Yes	No	Yes	No	Yes	No	Yes	No	Yes	No	Yes	No	Yes	No	Yes	No
10	Non-RecurCharges	Yes	Yes	Yes	Yes	Yes	Yes	Yes	Yes	Yes	Yes	Yes	Yes	Yes	Yes	Yes	Yes	Yes	No
11	End User Line Chg-Number Portability	Yes	No	Yes	No	Yes	No	Yes	No	Yes	No	Yes	No	Yes	No	Yes	No	Yes	No
12	Public Telephone Access Svc(PTAS)	Yes	Yes	Yes	Yes	Yes	Yes	Yes	Yes	Yes	Yes	Yes	Yes	Yes	Yes	Yes	No	Yes	Yes
13	Inside Wire Maint Service Plan	Yes	No	Yes	No	Yes	No	Yes	No	Yes	No	Yes	No	Yes	No	Yes	No	Yes	No

	Applicable Notes:
1.	**Grandfathered services** can be resold only to existing subscribers of the grandfathered service.
2.	Where available for resale, **promotions** will be made available only to End Users who would have qualified for the promotion had it been provided by BellSouth directly.
3.	In Tennessee, long-term **promotions** (offered for more than ninety (90) days) may be obtained at one of the following rates:
	(a) the stated tariff rate, less the wholesale discount;
	(b) the promotional rate (the promotional rate offered by BellSouth will not be discounted further by the wholesale discount rate)
4.	**Lifeline/Link Up** services may be offered only to those subscribers who meet the criteria that BellSouth currently applies to subscribers of these services as set forth in Sections A3 and A4 of the BellSouth General Subscriber Services Tariff.
5.	Some of BellSouth's local exchange and toll telecommunications services are not available in certain central offices and areas.

LINE INFORMATION DATA BASE (LIDB)

STORAGE AGREEMENT

I. SCOPE

A. This Agreement sets forth the terms and conditions pursuant to which BellSouth agrees to store in its LIDB certain information at the request of API and pursuant to which BellSouth, its LIDB customers and API shall have access to such information. API understands that BellSouth provides access to information in its LIDB to various telecommunications service providers pursuant to applicable tariffs and agrees that information stored at the request of API, pursuant to this Agreement, shall be available to those telecommunications service providers. The terms and conditions contained herein shall hereby be made a part of this Interconnection/Resale Agreement upon notice to API's account team to activate this LIDB Storage Agreement. The General Terms and Conditions of the Interconnection/Resale Agreement shall govern this LIDB Storage Agreement. The terms and conditions contained in the attached Addendum is hereby made a part of this LIDB Storage Agreement as if fully incorporated herein.

B. LIDB is accessed for the following purposes:

1. Billed Number Screening
2. Calling Card Validation
3. Fraud Control

C. BellSouth will provide seven days per week, 24-hours per day, fraud monitoring on Calling Cards, bill-to-third and collect calls made to numbers in BellSouth's LIDB, provided that such information is included in the LIDB query. BellSouth will establish fraud alert thresholds and will notify API of fraud alerts so that API may take action it deems appropriate. API understands and agrees BellSouth will administer all data stored in the LIDB, including the data provided by API pursuant to this Agreement, in the same manner as BellSouth's data for BellSouth's End User customers. BellSouth shall not be responsible to API for any lost revenue which may result from BellSouth's administration of the LIDB pursuant to its established practices and procedures as they exist and as they may be changed by BellSouth in its sole discretion from time to time.

API understands that BellSouth currently has in effect numerous billing and collection agreements with various interexchange carriers and billing clearing houses. API further understands that these billing and collection customers of BellSouth query BellSouth's LIDB to determine whether to accept various billing options from End Users. Additionally, API understands that presently BellSouth has no method to differentiate between BellSouth's own billing and line data in the LIDB and such data which it includes in the LIDB on API's behalf pursuant to this Agreement. Therefore, until such time as BellSouth can and does implement in its LIDB and its supporting systems the means to differentiate API's data from BellSouth's data and the Parties to this Agreement execute appropriate amendments hereto, the following terms and conditions shall apply:

(a) API agrees that it will accept responsibility for telecommunications services billed by BellSouth for its billing and collection customers for API's End User accounts which are resident in LIDB pursuant to this Agreement. API authorizes BellSouth to place such charges on API's bill from BellSouth and agrees that it shall pay all such charges. Charges for which API hereby takes responsibility include, but are not limited to, collect and third number calls.

(b) Charges for such services shall appear on a separate BellSouth bill page identified with the name of the entity for which BellSouth is billing the charge.

(c) API shall have the responsibility to render a billing statement to its End Users for these charges, but API's obligation to pay BellSouth for the charges billed shall be independent of whether API is able or not to collect from API's End Users.

(d) BellSouth shall not become involved in any disputes between API and the entities for which BellSouth performs billing and collection. BellSouth will not issue adjustments for charges billed on behalf of an entity to API. It shall be the responsibility of API and the other entity to negotiate and arrange for any appropriate adjustments.

II. FEES FOR SERVICE AND TAXES

A. API will not be charged a fee for storage services provided by BellSouth to API, as described in Section I of this Agreement.

B. Sales, use and all other taxes (excluding taxes on BellSouth's income) determined by BellSouth or any taxing authority to be due to any federal, state or local taxing jurisdiction with respect to the provision of the service set forth herein will be paid by

API in accordance with the tax provisions set forth in the General Terms and Conditions of this Agreement.

III. MISCELLANEOUS

A. It is understood and agreed to by the Parties that BellSouth may provide similar services to other companies.

B. All terms, conditions and operations under this Agreement shall be performed in accordance with, and subject to, all applicable local, state or federal legal and regulatory tariffs, rulings, and other requirements of the federal courts, the U. S. Department of Justice and state and federal regulatory agencies. Nothing in this Agreement shall be construed to cause either Party to violate any such legal or regulatory requirement and either Party's obligation to perform shall be subject to all such requirements.

C. This LIDB Storage Agreement constitutes the entire Agreement between API and BellSouth with respect to the subject matter hereof and supersedes all prior Agreements or contracts, oral or written representations, statements, negotiations, understandings, proposals and undertakings with respect to LIDB Storage.

RESALE ADDENDUM

TO LINE INFORMATION DATA BASE (LIDB)

STORAGE AGREEMENT

I. GENERAL

This Addendum sets forth the terms and conditions for API's provision of billing number information to BellSouth for inclusion in BellSouth's LIDB. BellSouth will store in its LIDB the billing number information provided by API, and BellSouth will provide responses to on-line, call-by-call queries to this information for purposes specified in Section I.B. of the Agreement.

II. DEFINITIONS

A. Billing number - a number used by BellSouth for the purpose of identifying an account liable for charges. This number may be a line or a special billing number.

B. Line number - a ten-digit number assigned by BellSouth that identifies a telephone line associated with a resold local exchange service, or with a SPNP arrangement.

C. Special billing number - a ten-digit number that identifies a billing account established by BellSouth in connection with a resold local exchange service or with a SPNP arrangement.

D. Calling Card number - a billing number plus PIN number assigned by BellSouth.

E. PIN number - a four digit security code assigned by BellSouth which is added to a billing number to compose a fourteen digit calling card number.

F. Toll billing exception indicator - associated with a billing number to indicate that it is considered invalid for billing of collect calls or third number calls or both, by API.

G. Billed Number Screening - refers to the activity of determining whether a toll billing exception indicator is present for a particular billing number.

H. Calling Card Validation - refers to the activity of determining whether a particular calling card number exists as stated or otherwise provided by a caller.

I. Billing number information - information about billing number or Calling Card number as assigned by BellSouth and toll billing exception indicator provided to BellSouth by API.

III. RESPONSIBILITIES OF PARTIES

A. BellSouth will include billing number information associated with resold exchange lines or SPNP arrangements in its LIDB. API will request any toll billing exceptions via the Local Service Request (LSR) form used to order resold exchange lines, or the SPNP service request form used to order SPNP arrangements.

B. Under normal operating conditions, BellSouth shall include the billing number information in its LIDB upon completion of the service order establishing either the resold local exchange service or the SPNP arrangement, provided that BellSouth shall not be held responsible for any delay or failure in performance to the extent such delay or failure is caused by circumstances or conditions beyond BellSouth's reasonable control. BellSouth will store in its LIDB an unlimited volume of the working telephone numbers associated with either the resold local exchange lines or the SPNP arrangements. For resold local exchange lines or for SPNP arrangements, BellSouth will issue line-based calling cards only in the name of API. BellSouth will not issue line-based calling cards in the name of API's individual End Users. In the event that API wants to include calling card numbers assigned by API in the BellSouth LIDB, a separate agreement is required.

C. BellSouth will provide responses to on-line, call-by-call queries to the stored information for the specific purposes listed in the next paragraph.

D. BellSouth is authorized to use the billing number information to perform the following functions for authorized users on an on-line basis:

1. Validate a 14 digit Calling Card number where the first 10 digits are a line number or special billing number assigned by BellSouth, and where the last four digits (PIN) are a security code assigned by BellSouth.

2. Determine whether API has identified the billing number as one which should not be billed for collect or third number calls, or both.

Optional Daily Usage File

1. Upon written request from API, BellSouth will provide the Optional Daily Usage File (ODUF) service to API pursuant to the terms and conditions set forth in this section.

2. API shall furnish all relevant information required by BellSouth for the provision of the Optional Daily Usage File.

3. The Optional Daily Usage Feed will contain billable messages that were carried over the BellSouth Network and processed in the BellSouth Billing System, but billed to a API customer.

   Charges for delivery of the Optional Daily Usage File will appear on API's monthly bills. The charges are as set forth in Exhibit F to this Attachment.

4. The Optional Daily Usage Feed will contain both rated and unrated messages. All messages will be in the standard Alliance for Telecommunications Industry Solutions (ATIS) EMI record format.

5. Messages that error in API's billing system will be the responsibility of API. If, however, API should encounter significant volumes of errored messages that prevent processing by API within its systems, BellSouth will work with the to determine the source of the errors and the appropriate resolution.

6. The following specifications shall apply to the Optional Daily Usage Feed.

6.1 Usage To Be Transmitted

6.1.1 The following messages recorded by BellSouth will be transmitted to API:

- Message recording for per use/per activation type services (examples: Three Way Calling, Verify, Interrupt, Call Return, etc.)
- Measured billable Local
- Directory Assistance messages
- IntraLATA Toll

- WATS and 800 Service
- N11
- Information Service Provider Messages
- Operator Services Messages
- Operator Services Message Attempted Calls (UNE only)
- Credit/Cancel Records
- Usage for Voice Mail Message Service

6.1.2 Rated Incollects (originated in BellSouth and from other companies) can also be on Optional Daily Usage File. Rated Incollects will be intermingled with BellSouth recorded rated and unrated usage. Rated Incollects will not be packed separately.

6.1.3 BellSouth will perform duplicate record checks on records processed to Optional Daily Usage File. Any duplicate messages detected will be deleted and not sent to API.

6.1.4 In the event that API detects a duplicate on Optional Daily Usage File they receive from BellSouth, API will drop the duplicate message (API will not return the duplicate to BellSouth).

6.2 Physical File Characteristics

6.2.1 The Optional Daily Usage File will be distributed to API via an agreed medium with CONNECT:Direct being the preferred transport method. The Daily Usage Feed will be a variable block format (2476) with an LRECL of 2472. The data on the Daily Usage Feed will be in a non-compacted EMI format (175 byte format plus modules). It will be created on a daily basis (Monday through Friday except holidays). Details such as dataset name and delivery schedule will be addressed during negotiations of the distribution medium. There will be a maximum of one dataset per workday per OCN.

6.2.2 Data circuits (private line or dial-up) may be required between BellSouth and API for the purpose of data transmission. Where a dedicated line is required, API will be responsible for ordering the circuit, overseeing its installation and coordinating the installation with BellSouth. API will also be responsible for any charges associated with this line. Equipment required on the BellSouth end to attach the line to the mainframe computer and to transmit successfully ongoing will be negotiated on a case by case basis. Where a dial-up facility is required, dial circuits will be installed in the BellSouth data center by BellSouth and the associated charges assessed to API.

Additionally, all message toll charges associated with the use of the dial circuit by API will be the responsibility of API. Associated equipment on the BellSouth end, including a modem, will be negotiated on a case by case basis between the Parties. All equipment, including modems and software, that is required on API end for the purpose of data transmission will be the responsibility of API.

6.3 Packing Specifications

6.3.1 A pack will contain a minimum of one message record or a maximum of 99,999 message records plus a pack header record and a pack trailer record. One transmission can contain a maximum of 99 packs and a minimum of one pack.

6.3.2 The OCN, From RAO, and Invoice Number will control the invoice sequencing. The From RAO will be used to identify to API which BellSouth RAO is sending the message. BellSouth and API will use the invoice sequencing to control data exchange. BellSouth will be notified of sequence failures identified by API and resend the data as appropriate.

THE DATA WILL BE PACKED USING ATIS EMI RECORDS.

6.4 Pack Rejection

6.4.1 API will notify BellSouth within one business day of rejected packs (via the mutually agreed medium). Packs could be rejected because of pack sequencing discrepancies or a critical edit failure on the Pack Header or Pack Trailer records (i.e. out-of-balance condition on grand totals, invalid data populated). Standard ATIS EMI Error Codes will be used. API will not be required to return the actual rejected data to BellSouth. Rejected packs will be corrected and retransmitted to API by BellSouth.

6.5 Control Data

API will send one confirmation record per pack that is received from BellSouth. This confirmation record will indicate API received the pack and the acceptance or rejection of the pack. Pack Status Code(s) will be populated using standard ATIS EMI error codes for packs that were rejected by API for reasons stated in the above section.

6.6 Testing

6.6.1 Upon request from API, BellSouth shall send test files to API for the Optional Daily Usage File. The Parties agree to review and discuss the file's content and/or format. For testing of usage results, BellSouth shall request that API set up a production (LIVE) file. The live test may consist of API's employees making test calls for the types of services API requests on the Optional Daily Usage File. These test calls are logged by API, and the logs are provided to BellSouth. These logs will be used to

verify the files. Testing will be completed within 30 calendar days from the date on which the initial test file was sent.

Enhanced Optional Daily Usage File

1. Upon written request from API, BellSouth will provide the Enhanced Optional Daily Usage File (EODUF) service to API pursuant to the terms and conditions set forth in this section. EODUF will only be sent to existing ODUF subscribers who request the EODUF option.

2. API shall furnish all relevant information required by BellSouth for the provision of the Enhanced Optional Daily Usage File.

3. The Enhanced Optional Daily Usage File (EODUF) will provide usage data for local calls originating from resold Flat Rate Business and Residential Lines.

4. Charges for delivery of the Enhanced Optional Daily Usage File will appear on API's monthly bills. The charges are as set forth in Exhibit F to this Attachment.

5. All messages will be in the standard Alliance for Telecommunications Industry Solutions (ATIS) EMI record format.

6. Messages that error in the billing system of API will be the responsibility of API. If, however, API should encounter significant volumes of errored messages that prevent processing by API within its systems, BellSouth will work with API to determine the source of the errors and the appropriate resolution.

7. The following specifications shall apply to the Optional Daily Usage Feed.

7.1 Usage To Be Transmitted

7.1.1 The following messages recorded by BellSouth will be transmitted to API:

Customer usage data for flat rated local call originating from API's End User lines (1FB or 1FR). The EODUF record for flat rate messages will include:

Date of Call

From Number

To Number

Connect Time

Conversation Time

Method of Recording

From RAO

Rate Class

Message Type

Billing Indicators

Bill to Number

7.1.2 BellSouth will perform duplicate record checks on EODUF records processed to Optional Daily Usage File. Any duplicate messages detected will be deleted and not sent to API.

7.1.3 In the event that API detects a duplicate on Enhanced Optional Daily Usage File they receive from BellSouth, API will drop the duplicate message (API will not return the duplicate to BellSouth).

7.2 Physical File Characteristics

7.2.1 The Enhanced Optional Daily Usage Feed will be distributed to API over their existing Optional Daily Usage File (ODUF) feed. The EODUF messages will be intermingled among API's Optional Daily Usage File (ODUF) messages. The EODUF will be a variable block format (2476) with an LRECL of 2472. The data on the EODUF will be in a non-compacted EMI format (175 byte format plus modules). It will be created on a daily basis (Monday through Friday except holidays).

7.2.2 Data circuits (private line or dial-up) may be required between BellSouth and API for the purpose of data transmission. Where a dedicated line is required, API will be responsible for ordering the circuit, overseeing its installation and coordinating the installation with BellSouth. API will also be responsible for any charges associated with this line. Equipment required on the BellSouth end to attach the line to the mainframe computer and to transmit successfully ongoing will be negotiated on a case by case basis. Where a dial-up facility is required, dial circuits will be installed in the BellSouth data center by BellSouth and the associated charges assessed to API. Additionally, all message toll charges associated with the use of the dial circuit by API will be the responsibility of API. Associated equipment on the BellSouth end, including a modem, will be negotiated on a case by case basis between the Parties. All equipment, including modems and software, that is required on API's end for the purpose of data transmission will be the responsibility of API.

7.3 Packing Specifications

7.3.1 A pack will contain a minimum of one message record or a maximum of 99,999 message records plus a pack header record and a pack trailer record. One transmission can contain a maximum of 99 packs and a minimum of one pack.

7.3.2 The Operating Company Number (OCN), From Revenue Accounting Office (RAO), and Invoice Number will control the invoice sequencing. The From RAO will be used to identify to API which BellSouth RAO is sending the message. BellSouth and API will use the invoice sequencing to control data exchange. BellSouth will be notified of sequence failures identified by API and resend the data as appropriate.

THE DATA WILL BE PACKED USING ATIS EMI RECORDS.

BELLSOUTH/API RATES
ODUF/EODUF

		RATES BY STATE								
DESCRIPTION	**USOC**	**AL**	**FL**	**GA**	**KY**	**LA**	**MS**	**NC**	**SC**	**TN**
ODUF/EODUF/CMDS										
ODUF: Recording, per message	N/A	$0.0002	$0.008	$0.0001275	$0.0008611	$0.00019	$0.0001179	$0.0003	$0.0002862	$0.008
ODUF: Message Processing, per message	N/A	$0.0033	$0.004	$0.0082548	$0.0032357	$0.0024	$0.0032089	$0.0032	$0.0032344	$0.004
EODUF: Message Processing, per message	N/A	$0.004	$0.004	$0.0034555	$0.004	$0.004	$0.004	$0.004	$0.004	$0.004
ODUF: Message Processing, per magnetic tape provisioned	N/A	$55.19	$54.95	$28.85	$55.68	$47.30	$54.62	$54.61	$54.72	$54.95
ODUF: Data Transmission (CONNECT:DIRECT), per message	N/A	$0.00004	$0.001	$0.0000434	$0.0000365	$0.00003	$0.0000354	$0.00004	$0.0000357	$0.001
* Volume and term arrangements are also available.										

NOTES:
If no rate is identified in the contract, the rate for the specific service or function will be as set forth in applicable BellSouth tariff or as negotiated by the Parties upon request by either Party.

Attachment 2

Network Elements and Other Services

TABLE OF CONTENTS

1. INTRODUCTION.....3

2. UNBUNDLED LOOPS, INTEGRATED DIGITAL LOOP CARRIERS, NETWORK INTERFACES DEVICE, UNBUNDLED LOOP CONCENTRATION (ULC) SYSTEM, SUB LOOPS AND DARK FIBER.... ERROR! BOOKMARK NOT DEFINED.

3. HIGH FREQUENCY SPECTRUM NETWORK ELEMENT.....24

4. SWITCHING.....28

5. UNBUNDLED NETWORK ELEMENT COMBINATIONS.....37

6. TRANSPORT, CHANNELIZATION AND DARK FIBER.....44

7. BELLSOUTH SWA 8XX TOLL FREE DIALING TEN DIGIT SCREENING SERVICE 51

8 LINE INFORMATION DATABASE (LIDB).....52

9 SIGNALING.....55

10. OPERATOR CALL PROCESSING, INWARD OPERATOR SERVICES AND DIRECTORY ASSISTANCE SERVICES.....63

11. CALLING NAME (CNAM) DATABASE SERVICE 69

12. BASIC 911 AND E911 71

13. TRUE-UP.....72

LIDB Storage Agreement..... Exhibit A

CNAM Database Service..... Exhibit B

Rates..... Exhibit C

ACCESS TO NETWORK ELEMENTS AND OTHER SERVICES

1. Introduction

1.1 This Attachment sets forth the unbundled network elements and combinations of unbundled network elements that BellSouth agrees to offer to API in accordance with its obligations under Section 251(c)(3) of the Act. The specific terms and conditions that apply to the unbundled network elements are described below in this Attachment 2. The price for each unbundled network element and combination of unbundled Network Elements are set forth in Exhibit C of this Agreement.

1.2 For purposes of this Agreement**, "**Network Element**"** is defined to mean a facility or equipment provided by BellSouth on an unbundled basis as is used by the CLEC in the provision of a telecommunications service. These unbundled network elements are consistent with the requirements of the FCC 51.319 rule. For purposes of this Agreement, combinations of Network Elements shall be referred to as "Combinations."

1.2.1 Except as otherwise required by law, BellSouth shall not impose limitation restrictions or requirements or request for the use of the network elements or combinations that would impair the ability of API to offer telecommunications service in the manner API intends.

1.2.2 Except upon request by API, BellSouth shall not separate requested network elements that BellSouth currently combines.

1.2.2.1 Unless otherwise ordered by an appropriate state or federal regulatory agency, currently combined Network Elements are defined as elements that are already combined within BellSouth's network to a given location.

1.3 BellSouth shall, upon request of API, and to the extent technically feasible, provide to API access to its network elements for the provision of API's telecommunications service. If no rate is identified in the contract, the rate for the specific service or function will be as set forth in the applicable BellSouth tariff or as negotiated by the Parties upon request by either Party.

1.4 API may purchase network elements and other services from BellSouth for the purpose of combining such network elements in any manner API chooses to provide telecommunication services to its intended users, including recreating existing BellSouth services. With the exception of the sub-loop elements which are located outside of the central office, BellSouth shall deliver the network elements purchased by API for combining to the designated API collocation space. The network elements shall be provided as set forth in this Attachment.

1.5 BellSouth shall comply with the requirements as set forth in the technical references within Attachment 2 to the extent that they are consistent with the greater of BellSouth's actual performance or applicable industry standards.

1.6 In the event that any effective legislative, regulatory, judicial or other legal action modifies or redefines the "Network Elements" in a manner which materially affects the terms of this Attachment or the Network Elements and/or prices set forth herein, either Party may, on thirty (30) days written notice, require renegotiation of such terms, and the Parties shall renegotiate in good faith such new terms in accordance with such legislative, regulatory, judicial or other legal action. In the event such new terms are not renegotiated within ninety (90) days after the notice for renegotiation, either Party may petition the Commission for resolution of the dispute between the Parties. Each Party reserves the right to seek judicial review of any Commission ruling concerning this Attachment.

1.7 API will adopt and adhere to the standards contained in the applicable BellSouth Operational Understanding regarding maintenance of service.

1.8 Standards for Network Elements

1.8.1 BellSouth shall comply with the requirements set forth in the technical references, as well as any performance or other requirements identified in this Agreement, to the extent that they are consistent with the greater of BellSouth's actual performance or applicable industry standards.

1.8.2 If one or more of the requirements set forth in this Agreement are in conflict, the Parties shall mutually agree on which requirement shall apply. If the Parties cannot reach agreement, the dispute resolution process set forth in Section 12 of the General Terms and Conditions of this Agreement, incorporated herein by this reference, shall apply.

1.9 **Rates**

The prices that API shall pay to BellSouth for Network Elements and Other Services are set forth in Exhibit C to this Attachment. If API purchases a service(s) from a tariff, all terms and conditions and rates as set forth in such tariff shall apply.

1.10 **Operational Support Systems (OSS)**

The terms, conditions and rates for OSS are as set forth in Section 2.13 of this Attachment.

2. Unbundled Loops, Network Interfaces Device, Unbundled Loop Concentration (ULC) System, Sub loops and Dark Fiber

All of the negotiated rates, terms and conditions set forth in this Section pertain to the provision of unbundled loops.

2.1 **Unbundled Loops**

2.1.1 Definition

2.1.2 The local loop network element ("Loop(s)") is defined as a transmission facility between a distribution frame (or its equivalent) in BellSouth's central office and the loop demarcation point at an end-user customer premises, including inside wire owned by BellSouth. The local loop network element includes all features, functions, and capabilities of the transmission facilities, including dark fiber and attached electronics (except those used for the provision of advanced services, such as Digital Subscriber Line Access Multiplexers) and line conditioning.

2.1.3 The provisioning of service to a CLEC's collocation space will require cross-office cabling and cross-connections within the central office to connect the loop to a local switch or to other transmission equipment. These cross-connects are a separate component, that are not considered a part of the loop, and thus, have a separate charge.

2.1.4 BellSouth Order Coordination referenced in Attachment 2 includes two types: "Order Coordination" (OC) and "Order Coordination - Time Specific" (OC-TS).

2.1.5 "Order Coordination" refers to standard BellSouth service order coordination involving the reuse of facilities where API is requesting that their loop order be provisioned over an existing circuit that is currently providing service to the end user. Order coordination for physical conversions will be scheduled at BellSouth's discretion during normal working hours on the committed due date and API will be advised. OC will be provided as a standard item on SL2 voice grade loops and all Unbundled Digital Loops (UDLs). OC will be provided as a chargeable option on SL1 voice grade loops, and all Unbundled Copper Loops.

2.1.6 "Order Coordination – Time Specific" refers to service order coordination in which API requests a specific time for a service order conversion to take place. BellSouth will make every effort to accommodate API's specific conversion time request. However, BellSouth reserves the right to negotiate with API a conversion time based on load and appointment control when necessary. Loops on a single service order of 14 or more loops will be provisioned on a project basis. This is a chargeable option for any coordinated order and is billed in addition to the OC charge. API may specify a time between 9:00 a.m. and 4:00 p.m. (location time) Monday through Friday (excluding holidays). If API specifies a time outside this window, or selects a time or quantity of loops that requires BellSouth technicians to work outside normal work hours, overtime charges will apply in addition to the OC and OC-TS charges. Overtime charges will be applied

according to actual costs based on type of force group required to perform the work, overtime hours worked and any special circumstances.

If API requests work to be done for any UNE loop that requires BellSouth technicians to work outside normal work hours, overtime charges will be applied according to actual costs based on type of force group required to perform the work, overtime hours worked and any special circumstances.

	Order Coordination (OC)	**Order Coordination – Time Specific (OC-TS)**	**Test Points**	**DLR**	**Charge for Dispatch and Testing if No Trouble Found**
SL-1	Chargeable option	Chargeable Option*	Not available	Chargeable Option – ordered as Engineering Information Document	Charged for Dispatch inside & outside Central Office
SL-2	Included	Chargeable Option*	Included	Included	Charged for Dispatch outside Central Office
Unbundled Digital Loop	Included	Chargeable Option* (except on Universal Digital Channel)	Included (where appropriate)	Included	Charged for Dispatch outside Central Office
Unbundled Copper Loop	Chargeable Option	Not available	Included	Included	Charged for Dispatch outside Central Office

*Order Coordination-Time Specific charge for orders due on same day at same location will be applied on a per LSR basis. For UVL-SL1, API must order OC when requesting OC-TS.

2.1.7 Where facilities are available, BellSouth will install loops in compliance with BellSouth's Interval Guide available at the website at http://www.interconnection.bellsouth.com. For orders of 14 or more loops, the installation will be handled on a project basis and the intervals will be set by the BellSouth project manager for that order. Some loops require a Service Inquiry (SI) to determine if facilities are available prior to issuing the order. The interval for the SI process is separate from the installation interval. For expedite requests by API, expedite charges will apply for intervals less than 5 days. The charges outlined in BellSouth's FCC No. 1 Tariff, Section 5, will apply. If API cancels an order for network elements and other services, any costs incurred by BellSouth in

conjunction with the provisioning of that order will be recovered in accordance with FCC No. 1 Tariff, Section 5.

2.1.8 If API modifies an order after being sent a Firm Order Confirmation (FOC) from BellSouth, any costs incurred by BellSouth to accommodate the modification will be paid by API.

2.1.9 BellSouth will offer Unbundled Voice Loops (UVL) in two different service levels - Service Level One (SL1) and Service Level Two (SL2).

2.1.10 SL1 loops are 2-wire loop start circuits, will be non-designed, and will not have remote access test points. OC will be offered as a chargeable option on SLI loops when reuse of existing facilities has been requested by API. API may also order OC-TS when a specified conversion time is requested. OC-TS is a chargeable option for any coordinated order and is billed in addition to the OC charge. An Engineering Information (EI) document can be ordered as chargeable option. The EI document provides loop make up information which is similar to the information normally provided in a Design Layout Record. Upon issuance of a non-coordinated order in the service order system, SL1 loops will be activated on the due date in the same manner and time frames that BellSouth normally activates POTS-type loops for its customers.

2.1.11 SL2 loops may be 2-wire or 4-wire circuits, shall have remote access test points, and will be designed with a design layout record provided to API. SL2 circuits can be provisioned with loop start, ground start or reverse battery signaling. OC is provided as a standard feature on SL2 loops. The OC feature will allow API to coordinate the installation of the loop with the disconnect of an existing customer's service and/or number portability service. In these cases, BellSouth will perform the order conversion with standard order coordination at its discretion during normal work hours.

2.1.12 BellSouth will also offer Unbundled Digital Loops (UDL) to API.

2.1.12.1 UDLs are service specific and will be designed, will be provisioned with test points (where appropriate), and will come standard with OC and a DLR. The various UDLs are intended to support a specific digital transmission scheme or service. The UDL loops are as follows:

2.1.12.2 UDC/IDSL. Due to technical limitations associated with certain Digital Loop Carrier (DLC) systems, some ISDN-capable loops that are provisioned using DLC systems may not support Integrated Digital Subscriber Line (IDSL) service. BellSouth will not reconfigure its ISDN-capable loop to support IDSL service.

2.1.12.3 Instead, BellSouth agrees to offer the Universal Digital Channel (UDC), which may also be referred to as an IDSL-capable loop as part of its UDL offerings. The UDC loop is intended to be compatible with IDSL service and has the same

physical characteristics and transmission specifications as BellSouth's ISDN-capable loop. These specifications are listed in BellSouth's TR73600.

2.1.12. 4 Like the ISDN-capable loop, the UDC may be provisioned on copper or through a DLC system. However, when UDCs are provisioned using a DLC system, BellSouth will ensure that they are only provisioned on time slots that are compatible with data-only services such as IDSL.

2.1.12.5 HDSL-capable. This is a designed loop that is provisioned according to Carrier Serving Area (CSA) criteria and may be up to 12,000 feet long and may have up to 2,500 feet of bridged tap (inclusive of loop length). It may be a 2-wire or 4-wire circuit and will come standard with a test point, Order Coordination, and a DLR.

2.1.12.6 ADSL-capable. This is a designed loop that is provisioned according to Revised Resistance Design (RRD) criteria and may be up to 18kft long and may have up to 6kft of bridged tap (inclusive of loop length). It may be a 2-wire or 4-wire circuit and will come standard with a test point, Order Coordination, and a DLR.

2.1.12.7 DS1. This is a designed 4-wire loop that is provisioned according to industry standards for DS1 or Primary Rate ISDN services and will come standard with a test point, Order Coordination, and a DLR.

2.1.12.8 DS0. These are designed 4-wire loops that may configured as 64kbps, 56kbps, 19kbps, and other sub-rate speeds associated with digital data services and will come standard with a test point, Order Coordination, and a DLR.

2.1.13 As a chargeable option on all loops except the Universal Digital Channel (UDC) and all Unbundled Copper Loops (UCL), BellSouth will offer OC-TS. This will allow API the ability to specify the time that the coordinated conversion takes place. The OC-TS charge for orders due on the same day at the same location will be applied on a per Local Service Request (LSR) basis.

2.1.14 In addition to the UVLs and UDLs, BellSouth shall make available Unbundled Copper Loops (UCLs). The UCL will be a copper twisted pair loop that is unencumbered by any intervening equipment (e.g., filters, load coils, range extenders, digital loop carrier, or repeaters). The UCL will be offered in two versions - Short and Long. A short UCL (18 kft or less) will be provisioned according to Resistance Design parameters, may have up to 6kft of bridged tap and will have up to 1300 ohms of resistance. The long UCL (beyond 18kft) will be any dry copper pair longer than 18kft and may have up to 12kft of bridged tap and up to 2800 ohms of resistance. Unbundled Loop Modifications (ULM) may be used when a CLEC wants to condition copper loops by removing load coils and other intervening equipment. In almost every case, the UCL long will require

ULM to remove load coils. BellSouth will only ensure electrical continuity and balance relative to tip and ring on UCLs.

2.1.15 The UCL is a designed circuit, is provisioned with a test point and comes standard with a DLR. OC will be offered as a chargeable option on all UCL loops. OC is required on UCLs where a reuse of existing facilities has been requested by API. Order Coordination – Time Specific (OC-TS) will not be offered on UCLs.

2.1.16 The UCL is a dry copper loop and is not intended to support any particular telecommunications service. API may use the UCL loop for a variety of services, including xDSL (e.g., ADSL and HDSL) services, by attaching appropriate terminal equipment of API's choosing. API will determine the type of service that will be provided over the loop.

2.1.17 Because the UCL loop shall be an unbundled loop offering that is separate and distinct from BellSouth's ADSL and HDSL capable loop offerings, API agrees that BellSouth's UCL loop will not be held to the service level and performance expectations that apply to its ADSL and HDSL unbundled loop offerings. BellSouth shall only be obligated to maintain copper continuity and provide balance relative to tip and ring on UCL loops.

2.1.18 All UNE loops offered by BellSouth shall be provided to API in accordance with BellSouth's Technical Reference 73600.

2.1.19 API will be responsible for testing and isolating troubles on the loops. Once API has isolated a trouble to the BellSouth provided loop, API will issue a trouble to BellSouth on the loop. BellSouth will take the actions necessary to repair the loop if a trouble actually exists. BellSouth will repair these loops in the same time frames that BellSouth repairs similarly situated loops to its customers.

2.1.20 If API reports a trouble on SL1 loops and no trouble actually exists, BellSouth will charge API for any dispatching and testing (both inside and outside the CO) required by BellSouth in order to confirm the loop's working status.

2.1.21 CLEC must test and isolate trouble to the BellSouth portion of the SL2 loop before reporting repair to UNE Center. At the time of the trouble report, API will be required to provide the results of the CLEC test which indicate a problem on the BellSouth provided loop. If API reports a trouble on SL2 loops and no trouble actually exists, BellSouth will charge API for any dispatching and testing, (outside the CO) required by BellSouth in order to confirm the loop's working status.

2.1.22 <u>Technical Requirements</u>

2.1.22.1 To the extent available within BellSouth's Network at a particular location, BellSouth will offer loops capable of supporting telecommunications services such as: POTS, Centrex, basic rate ISDN, analog PBX, voice grade private line, ADSL, HDSL, DS1 and digital data (up to 64 kb/s). If a requested loop type is

not available, then the CLEC can use the Special Construction process to request that BellSouth place facilities or otherwise modify facilities in order to meet API's request.

2.1.22.2 API will be responsible for providing BellSouth with a Service Profile Identifier (SPID) associated with a particular ISDN-capable loop and end user. With the SPID, BellSouth will be able to adequately test the circuit and ensure that it properly supports ISDN service.

2.1.22.3 The loop will support the transmission, signaling, performance and interface requirements of the services described in 2.1.2 above. It is recognized that the requirements of different services are different, and that a number of types or grades of loops are required to support these services. Services provided over the loop by API will be consistent with industry standards and BellSouth's TR73600.

2.1.22.4 API may utilize the unbundled loops to provide any telecommunication service it wishes. However, BellSouth will only provision, maintain and repair the loops to the standards that are consistent with the type of loop ordered. For example, if API orders an ISDN-capable loop but wants to use the loop for a service other than ISDN, BellSouth will only support that the loop is capable of providing ISDN service. For non-service specific loops (e.g. UCL, loops modified by API using the Special Construction process), BellSouth will only support that the loop has copper continuity and balanced tip-and-ring.

2.1.22.5 In some instances, API will require access to a copper twisted pair loop unfettered by any intervening equipment (e.g., filters, load coils, range extenders, etc.), so that API can use the loop for a variety of services by attaching appropriate terminal equipment at the ends. API will determine the type of service that will be provided over the loop. In some cases, API may be required to pay additional charges for the removal of certain types of equipment. BellSouth's Unbundled Loop Modifications (ULM) process will be used to determine the costs and feasibility of these activities.

2.1.22.6 In those cases where API has requested that BellSouth modify a loop so that it no longer meets the technical parameters of the original loop type (e.g., voice grade, ISDN, ADSL, etc.) the resulting modified loop will be ordered and maintained as a UCL.

2.1.22.7 The loop shall be provided to API in accordance with BellSouth's TR73600 Unbundled Local Loop Technical Specification and applicable industry standard technical references.

2.2 **Unbundled Loop Modifications (Line Conditioning)**

2.2.1 Subject to applicable and effective FCC rules and orders, BellSouth shall condition loops, as requested by API, whether or not BellSouth offers advanced

services to the End User on that loop.

2.2.2 Loop conditioning is defined as the removal from the loop of any devices that may diminish the capability of the loop to deliver high-speed switched wireline telecommunications capability, including xDSL service. Such devices include, but are not limited to, load coils, bridge taps, low pass filters, and range extenders.

2.2.3 The Unbundled Loop Modifications (ULM) offering provides the following elements: 1) removal of equipment on loops equal to or less than 18kft; 2) removal of equipment of loops longer than 18kft; and 3) removal of bridged-taps on loops of any length.

2.2.4 BellSouth shall recover the cost of line conditioning requested by API through a recurring charge and/or nonrecurring charge(s) in accordance with the FCC's forward-looking pricing principles promulgated pursuant to Section 252 (d) (1) of the Act and in compliance with FCC Rule 52.507 (e).

2.3 **Integrated Digital Loop Carriers**

2.3.1 Where BellSouth uses Integrated Digital Loop Carrier (IDLC) systems to provide the local loop and BellSouth has a suitable alternate facility available, BellSouth will make arrangements to permit API to order a contiguous local loop. To the extent it is technically feasible, these arrangements will provide API with the capability to serve end users at a level that is at parity with the level of service BellSouth provides its customers. If no alternate facility is available, BellSouth will utilize its Special Construction (SC) process to determine the additional costs required to provision the loop facilities. API will then have the option of paying the SC rates to place the loop facilities or API may chose some other method of providing service to the end-user (e.g., Resale, private facilities, etc.).

2.4 **Network Interface Device**

2.4.1 <u>Definition</u>

The NID is defined as any means of interconnection of end-user customer inside wire to BellSouth's distribution plant, such as a cross-connect device used for that purpose. The NID is a single-line termination device or that portion of a multiple-line termination device required to terminate a single line or circuit at the premises. The NID features two independent chambers or divisions that separate the service provider's network from the End User's on-premises wiring. Each chamber or division contains the appropriate connection points or posts to which the service provider and the end user each make their connections. The NID provides a protective ground connection and is capable of terminating cables such as twisted pair cable.

2.4.2 BellSouth shall permit API to connect API's loop facilities the end-user's inside wire through the BellSouth NID or at any other technically feasible point.

2.4.3 Access to Network Interface Device (NID)

2.4.3.1 Due to the wide variety of NIDs utilized by BellSouth (based on subscriber size and environmental considerations), API may access the end user's wire by any of the following means: **1)** BellSouth shall allow API to connect its loops directly to BellSouth's multi-line residential NID enclosures that have additional space and are not used by BellSouth or any other telecommunications carriers to provide service to the premise. It is the responsibility of API to leave undisturbed the existing form of electrical protection and to maintain the physical integrity of the NID; **2)** Where an adequate length of the end user's inside wire is present and environmental conditions permit, either Party may remove the inside wire from the other Party's NID and connect that wire to that Party's own NID; **3)** Enter the subscriber access chamber or "side" of "dual chamber" NID enclosures for the purpose of extending a connecterized or spliced jumper wire from the inside wiring through a suitable "punch-out" hole of such NID enclosures; or **4)**Request BellSouth to make other rearrangements to the inside wiring terminations or terminal enclosure on a time and materials cost basis to be charged to the requesting Party (i.e., API, its agent, the building owner or the subscriber). Such charges will be billed to the requesting Party.

2.4.3.2 In no case shall either Party remove or disconnect the other Party's loop facilities from either Party's NIDs, enclosures, or protectors unless the applicable Commission has expressly permitted the same and the disconnecting Party provides prior notice to the other Party. In such cases, it shall be the responsibility of the Party disconnecting loop facilities to leave undisturbed the existing form of electrical protection and to maintain the physical integrity of the NID. It will be the CLEC's responsibility to ensure there is no safety hazard and will hold BellSouth harmless for any liability associated with the removal of the BellSouth loop from the BellSouth NID. Furthermore, it shall be the responsibility of the disconnecting Party, once the other Party's loop has been disconnected from the NID, to reconnect the disconnected loop to a nationally- recognized–testing-laboratory-listed station protector, which has been grounded as per Article 800 of the National Electrical Code. If no spare station protector exists in the NID, the disconnected loop must be appropriately cleared, capped and stored. If CLEC does not wish to accept these responsibilities, other options exist in which BellSouth installs a NID for the CLEC as a chargeable option. 2.4.3.3In no case shall either Party remove or disconnect ground wires from BellSouth's NIDs, enclosures, or protectors.2.4.3.4In no case shall either Party remove or disconnect NID modules, protectors, or terminals from BellSouth's NID enclosures.
Technical Requirements

2.4.3.3 The NID shall provide an accessible point of interconnection and shall maintain a connection to ground.

2.4.3.4 If an existing NID is accessed, it shall be capable of transferring electrical analog or digital signals between the subscriber's inside wiring and the Distribution Media and/or cross connect to API's NID

2.4.3.5 Where a BellSouth NID exists, it is provided in its "as is" condition. API may request BellSouth do additional work to the NID on a time and material basis.. When API deploys its own local loops with respect to multiple-line termination devices, API shall specify the quantity of NIDs connections that it requires within such device.

2.4.4 Interface Requirements

2.4.4.1 The NID shall be equal to or better than all of the requirements for NIDs set forth in the applicable industry standard technical references.

2.5 Unbundled Loop Concentration (ULC) System

2.5.1 BellSouth will provide to API Unbundled Loop Concentration (ULC). Loop concentration systems in the central office concentrate the signals transmitted over local loops onto a digital loop carrier system. The concentration device is placed inside a BellSouth central office. BellSouth will offer ULC with a TR008 interface or a TR303 interface.

2.5.2 ULC will be offered in two sizes. System A will allow up to 96 BellSouth loops to be concentrated onto multiple DS1s. The high-speed connection from the concentrator will be at the electrical DS1 level and will connect to API at API's collocation site. System B will allow up to 192 BellSouth loops to be concentrated onto multiple DS1s. System A may be upgraded to a System B. A minimum of two DS1s is required for each system (i.e., System A requires two DS1s and System B would require an additional two DS1s or four in total). All DS1 interfaces will terminate to the CLEC's collocation space. ULC service is offered with concentration (2 DS1s for 96 channels) or without concentration (4 DS1s for 96 channels) and with or without protection. A Line Interface element will be required for each loop that is terminated onto the ULC system. Rates for ULC are as set forth in this Attachment.

2.6 **Sub-loop Elements**

2.6.1 Where facilities permit and subject to applicable and effective FCC rules and orders, BellSouth shall offer access to its Unbundled Sub Loop (USL) and Unbundled Sub-loop Concentration (USLC) System. BellSouth shall provide non-discriminatory access, in accordance with FCC Rule 51.311 and Section 251(c) (3) of the Act, to the sub-loop on an unbundled basis and pursuant to the following terms and conditions and the rates approved by the Commission and set forth in this Attachment.

2.6.2 Sub-loop components include but are not limited to the following:

2.6.2.1 Unbundled Sub-Loop Distribution;

2.6.2.2 Unbundled Sub-Loop Concentration/Multiplexing Functionality; and

2.6.2.3 Unbundled Sub-Loop Feeder.

2.7 **Unbundled Sub-Loop (distribution facilities)**

2.7.1 Definition

2.7.1.1 Subject to applicable and effective FCC rules and orders, the unbundled sub-loop distribution facility is dedicated transmission facility that BellSouth provides from a customer's point of demarcation to a BellSouth cross-connect device. The BellSouth cross-connect device may be located within a remote terminal (RT) or a stand-alone cross-box in the field or in the equipment room of a building. The unbundled sub-loop distribution media is a copper twisted pair that can be provisioned as a 2 Wire or 4 Wire facility. Following are the current sub-loop distribution offerings:

2.7.1.1.1 Voice grade Unbundled Sub-Loop Distribution (USL-D) is a sub-loop facility from the cross-box in the field up to and including the point of demarcation, at the end user's premises.

2.7.1.1.2 Unbundled Sub-Loop distribution facilities were originally built as part of the entire voice grade loop from the BellSouth central office to the customer network interface. Therefore, the voice grade Unbundled Sub-Loop may have load coils, which are necessary for transmission of voice grade services.

2.7.1.1.3 Unbundled Copper Sub-Loop (UCSL) is a non-loaded copper facility of any length provided from the cross-box in the field up to and including the end-user's point of demarcation.

2.7.1.1.3.1 If available, this facility will not have any intervening equipment such as load coils between the end-user and the cross-box.

2.7.2 If API requests a UCSL and a non-loaded pair is not available, API may order Unbundled Sub-Loop Modification to remove load coils and/or bridge tap from an existing sub-loop facility. If load coils are removed from an existing sub-loop, that sub-loop will be classified as a UCSL. API may order Loop Make-up to determine what loop modifications will be required.

2.7.3 Unbundled Sub-Loop distribution facilities shall support functions associated with provisioning, maintenance and testing of the Unbundled Sub-Loop. For access to Voice Grade USL-D and UCSL, API would be required to deliver a cable to the BellSouth remote terminal or cross-box in the field to provide continuity to API's feeder facilities. This cable would be connected, by a BellSouth technician, within the BellSouth RT/cross-box during the set-up process. API's cable pairs

can then be connected to BellSouth's USL within the BellSouth cross-box by the BellSouth technician.

2.7.4 Unbundled Sub-Loop – Intrabuilding Network Cable (USL-INC) (a.k.a. riser cable) is the distribution facility inside a subscriber's building or between buildings on one customer's same premises (continuous property not separated by a public street or road). USL-INC includes the facility from the cross-connect device in the building equipment room up to and including the point of demarcation, at the end user's premises.

2.7.4.1 In a scenario that requires connection in a building equipment room, BellSouth will install a cross connect panel for the purpose of accessing USL-INC pairs. The cross-connect panel will function as a single point of interconnection (SPOI) for USL-INC and will be accessible by multiple carriers as space permits. BellSouth will place cross-connect blocks in 25-pair increments for API's use on this cross-connect panel. API will be responsible for connecting its facilities to the 25-pair cross-connect block(s).

2.7.5 BellSouth will provide Unbundled Sub-Loops where possible. Through the firm order Service Inquiry (SI) process, BellSouth will determine if it is feasible to place the required facilities where API has requested access to Unbundled Sub-Loops. If existing capacity is sufficient to meet the CLEC demand, then BellSouth will perform the set-up work as described in Section 2.7.6. If any work must be done to modify existing BellSouth facilities or add new facilities (other than adding the cross-connect panel in a building equipment room as noted in Section 2.7) to accommodate API's request for Unbundled Sub-Loops, API may request BellSouth's Special Construction (SC) process to determine additional costs required to provision the Unbundled Sub-Loops. API will have the option of paying the SC charges to modify the BellSouth facilities.

2.7.6 Set-up work must be completed before API can order sub-loop pairs. During the set-up in a BellSouth cross-connect box in the field, the BellSouth technician will perform the necessary work to splice the CLEC's cable into the cross-connect box. For the set-up inside a building equipment room, BellSouth will perform the necessary work to install the cross-connect panel and the connecting block(s) that will be used to provide access to the requested USLs.

2.7.6.1 Once the set-up is complete, the CLEC will request sub-loop pairs through submission of a Local Service Request (LSR) form to the Local Carrier Service Center (LCSC). Order Coordination is required with USL pair provisioning when API requests reuse of an existing facility and is in addition to the USL pair rate. For expedite requests by API for sub-loop pairs, expedite charges will apply for intervals less than 5 days.

2.7.6.2 Unbundled Sub-Loop shall be equal to or better than each of the applicable requirements set forth in the applicable industry standard technical references.

2.7.6.3 Unbundled Sub-Loops will be provided in accordance with technical reference TR73600.

2.8 **Unbundled Network Terminating Wire (UNTW)**

2.8.1 BellSouth agrees to offer its Unbundled Network Terminating Wire (UNTW) to API pursuant to the following terms and conditions at rates as set forth in this Attachment.

2.8.2 Definition

2.8.2.1 Subject to applicable and effective FCC rules and orders, UNTW is a dedicated transmission facility that BellSouth provides from the Wiring Closet /Garden Terminal (or other type of cross-connect point) at the point of termination of BellSouth's loop distribution facilities to the end user's point of demarcation. UNTW is the final portion of the loop owned by BellSouth.

2.8.3 Requirements

2.8.3.1 On a multi-unit premises where Provisioning Party owns the network terminating wire, and by request of Requesting Party, Provisioning Party will provide access to UNTW pairs on an Access Terminal that is suitable for use by multiple carriers at each Garden Terminal or Wiring Closet.

2.8.3.2 In new construction where possible, both Parties may at their option and with the property owner's agreement install their own Network Terminating Wire (NTW). In existing construction, the Provisioning Party shall not be required to install new or additional NTW beyond existing NTW to provision the services of the Requesting Party.

2.8.3.3 Upon notice from the Requesting Party to the Provisioning Party that the Requesting Party desires access to the Provisioning Party's UNTW pairs in a multi-unit premises, representatives of both Parties will participate in a meeting at the site of the requested access. The purpose of the site visit will include discussion of the procedures for Access Terminal installation, location and addresses of the Access Terminals and to discuss an estimated completion date. Upon completion of site visit, the Requesting Party will submit a Service Inquiry (SI) to the person or organization designated by the Provisioning Party to receive the SI. The SI will initiate the work for the Provisioning Party to begin the Access Terminal installation. In multi-tenant unit (MTU) scenarios, Provisioning Party will provide access to UNTW pairs on an Access Terminal(s). By request of the Requesting Party, an Access Terminal will be installed either adjacent to each Provisioning Party's Garden Terminal or inside each Wiring Closet on the requested MTU. All the UNTW pairs served by a Garden Terminal/Wiring Closet will be made available on the Access Terminals. Requesting Party will deliver and connect its central office facilities to the UNTW pairs within the Access

Terminal. Requesting Party may access any available pair on an Access Terminal unless the Provisioning Party or another service provider is using the pair to concurrently provide service. Prior to connecting Requesting Party's service on a pair previously used by Provisioning Party, Requesting Party is responsible for ensuring the end-user is no longer using Provisioning Party's service or another CLEC's service before accessing UNTW pairs.

2.8.3.4 Access Terminal installation intervals will be established on an individual case basis.

2.8.3.5 Requesting Party is responsible for obtaining the property owner's permission for Provisioning Party to install an Access Terminal(s) on behalf of the Requesting Party. The submission of the SI by the Requesting Party will serve as certification by the Requesting Party that such permission has been obtained. If the property owner objects to Access Terminal installations that are in progress or subsequent to completion and demands removal of Access Terminals, API will be responsible for costs associated with removing Access Terminals and restoring property to original state prior to Access Terminals being installed.

2.8.3.6 Requesting Party will be billed for non-recurring and recurring charges for accessing UNTW pairs at the time the Requesting Party activates the pair(s). API will report use of the UNTW pairs on a Local Service Request (LSR) form submitted to BellSouth's Local Carrier Service Center (LCSC).

2.8.3.7 Requesting Party will isolate and report repair problems to the UNE center. Requesting Party must tag the UNTW pair that requires repair. If Provisioning Party dispatches a technician on a reported trouble call and no UNTW trouble is found, Provisioning Party will charge Requesting Party for time spent on the dispatch and testing the UNTW pair(s).

2.8.3.8 If Requesting Party initiates the Access Terminal installation and the Requesting Party has not activated at least one pair on the Access Terminal installed pursuant to Requesting Party's request for an Access Terminal within 6 months of installation of the Access Terminal, Provisioning Party will bill Requesting Party a non-recurring charge equal to the actual cost of provisioning the Access Terminal.

2.8.3.9 If Provisioning Party determines that Requesting Party is using the UNTW pairs without reporting such usage to BellSouth, the following charges shall apply in addition to any fines which may be established by state commissions and any other remedies at law or in equity available to the Provisioning Party:

2.8.3.10 If Requesting Party issued a LSR to disconnect an end-user from BellSouth in order to use a UNTW pair, Requesting Party will be billed for the use of the pair back to the disconnect order date.

2.8.3.11 If Requesting Party activated a UNTW pair on which Provisioning Party was not previously providing service, Requesting Party will be billed for the use of that pair back to the date the end-user began receiving service using that pair. Upon request, Requesting Party will provide copies of its billing record to substantiate such date. If Requesting Party fails to provide such records, then Provisioning Party will bill the Requesting Party back to the date of the Access Terminal installation.

2.9 **Unbundled Sub-Loop Concentration System (USLC)**

2.9.1 Where facilities permit and where necessary to comply with an effective Commission order, BellSouth will provide API with the ability to concentrate its sub-loops onto multiple DS1s back to the BellSouth Central Office. The DS1s will then be terminated into API's collocation space. TR-008 and TR303 interface standards are available.

2.9.2 USLC, using the Lucent Series 5 equipment, will be offered in two different systems. System A will allow up to 96 of API's sub-loops to be concentrated onto multiple DS1s. System B will allow an additional 96 of API's sub-loops to be concentrated onto multiple DS1s. One System A may be supplemented with one System B and they both must be physically located in a single Series 5 dual channel bank. A minimum of two DS1s is required for each system (i.e., System A requires two DS1s and System B would require an additional two DS1s or four in total). The DS1 level facility that connects the RT site with the serving wire center is known as a Feeder Interface. All DS1 Feeder Interfaces will terminate to the CLEC's collocation space within the SWC that serves the RT where the CLEC's sub-loops are connected. USLC service is offered with or without concentration and with or without a protection DS1.

2.9.3 In these scenarios API would be required to place a cross-box, remote terminal (RT), or other similar device and deliver a cable to the BellSouth RT. This cable would be connected, by a BellSouth technician, to a cross-connect panel within the BellSouth RT/cross-box and would allow API's sub-loops to then be placed on the ULSC and transported to their collocation space at a DS1 level.

2.10 **Unbundled Sub-Loop Feeder**

2.10.1 Definition

2.10.1.1 Unbundled Sub-Loop Feeder (USLF) provides connectivity between BellSouth's central office and its cross-box (or other access point) that serves an end user location.

2.10.2 USLF is intended to be utilized for voice traffic and can be configured as 2-wire voice (USLF-2W/V) or 4-wire voice (USLF-4W/V).

2.10.3 USLF can also be utilized for digital traffic and can be configured as 2-wire ISDN (USLF-2W/I); 2-wire Copper (USLF-2W/C); 4-wire Copper (USLF-4W/C) facilities: 4-wire DS0 level loop (USLF-4W/D0); or 4-wire DS1 and ISDN (USLF-4W/DI).

2.10.4 USLF will provide the facilities needed to provision a 2W or 4W communications pathway from the BellSouth central office to the BellSouth cross-box. This element will allow for the connection of API's loop distribution elements onto BellSouth's feeder system.

2.10.5 Requirements

2.10.5.1 API will extend its compatible cable to BellSouth's cross-box. The cable will then be connected to a panel inside the BellSouth cross-box to the requested level of feeder element. In those cases when there is no room in the BellSouth cross-box to accommodate the additional cross-connect panels mentioned above, BellSouth will utilize its Special Construction process to determine the costs to provide the sub-loop feeder element to API. API will then have the option of paying the special construction charges or canceling the order.

2.10.5.2 USLF will be a designed circuit and BellSouth will provide a Design Layout Record (DLR) for this element.

2.10.5.3 BellSouth will provide USLF elements in accordance with applicable industry standards for these types of facilities. Where industry standards do not exist, BellSouth's TR73600 will be used to determine performance parameters.

2.11 Dark Fiber

2.11.1 Definition

2.11.1.1 Dark Fiber is optical transmission facilities without attached signal regeneration, multiplexing, aggregation or other electronics that connects two points within BellSouth's network. Dark Fiber is unused strands of optical fiber. It may be strands of optical fiber existing in aerial or underground structure. No line terminating elements terminated to such strands to operationalize its transmission capabilities will be available.

2.11.2 Requirements

2.11.2.1 BellSouth shall make available Dark Fiber where it exists in BellSouth's network and where, as a result of future building or deployment, it becomes available. If BellSouth has plans to use the fiber within a two –year planning period, there is no requirement to provide said fiber to API.

2.11.2.2 If the requested dark fiber has any lightwave repeater equipment interspliced to it, BellSouth will remove such equipment at API's request subject to time and materials charges.

2.11.2.3 API may test the quality of the Dark Fiber to confirm its usability and performance specifications.

2.11.2.4 BellSouth shall use its best efforts to provide to API information regarding the location, availability and performance of Dark Fiber within ten (10) business days for a records-based answer and twenty (20) business days for a field-based answer, after receiving a request from API ("Request"). Within such time period, BellSouth shall send written confirmation of availability of the Dark Fiber ("Confirmation"). From the time of the Request to one hundred and twenty (120) days after Confirmation, BellSouth shall hold such requested Dark Fiber for API's use and may not allow any other Party to use such media, including BellSouth. If a Dark Fiber firm order is not received within the one hundred and twenty day period, the fiber will revert to BellSouth's Dark Fiber inventory.

2.11.2.5 BellSouth shall use its best efforts to make Dark Fiber available to API within thirty (30) business days after it receives written confirmation from API that the Dark Fiber previously deemed available by BellSouth is wanted for use by API. This includes identification of appropriate connection points (e.g., Light Guide Interconnection (LGX) or splice points) to enable API to connect or splice API provided transmission media (e.g., optical fiber) or equipment to the Dark Fiber.

2.11.2.6 Dark Fiber shall meet the manufacturer's design specifications.

2.11.2.7 API may splice and test Dark Fiber obtained from BellSouth using API or API designated personnel. BellSouth shall provide appropriate interfaces to allow splicing and testing of Dark Fiber. BellSouth shall provide an excess cable length of 25 feet minimum (for fiber in underground conduit) to allow the uncoiled fiber to reach from the manhole to a splicing van.

2.12 **Rates**

The prices that API shall pay to BellSouth for Network Elements and Other Services are set forth in Exhibit C to this Attachment.

2.13 **Operational Support Systems (OSS)**

2.13.1 BellSouth has developed and made available the following electronic interfaces by which API may submit LSRs electronically.

LENS	Local Exchange Navigation System
EDI	Electronic Data Interchange
TAG	Telecommunications Access Gateway

2.13.2 LSRs submitted by means of one of these electronic interfaces will incur an OSS electronic ordering charge as specified in the table below. An individual LSR will be identified for billing purposes by its Purchase Order Number (PON). LSRs submitted by means other than one of these interactive interfaces (mail, fax, courier, etc.) will incur a manual order charge as specified in the table below:

OPERATIONAL SUPPORT SYSTEMS	**AL, GA, LA, MS, NC, SC**	**FL, KY, TN**
OSS LSR charge, per LSR received from the CLEC by one of the OSS interactive interfaces	$3.50 SOMEC	$3.50 SOMEC
Incremental charge per LSR received from the CLEC by means other than one of the OSS interactive interfaces	See applicable rate element	$19.99 SOMAN

2.13.3 Denial/Restoral OSS Charge

2.13.3.1 In the event API provides a list of customers to be denied and restored, rather than an LSR, each location on the list will require a separate PON and, therefore will be billed as one LSR per location.

2.13.4 Cancellation OSS Charge

2.13.4.1 API will incur an OSS charge for an accepted LSR that is later canceled by API.

Note: Supplements or clarifications to a previously billed LSR will not incur another OSS charge.

2.13.5 Network Elements and Other Services Manual Additive

2.13.5.1 The Commissions in some states have ordered per-element manual additive non-recurring charges (NRC) for Network Elements and Other Services ordered by means other than one of the interactive interfaces. These ordered Network Elements and Other Services manual additive NRCs will apply in these states, rather than the charge per LSR. The per-element charges are listed on the Rate Tables in Exhibit C.

2.14 **Preordering Loop Makeup (LMU)**

2.14.1 Description of Service

2.14.1.1 BellSouth shall make available to API loop makeup (LMU) data for BellSouth's network facilities. This section addresses LMU as a *preordering* transaction, distinct from API ordering any other service(s). Loop Makeup *Service Inquiries (LMUSI) for preordering loop makeup* are likewise unique from other preordering functions with associated service inquiries (SI) as described in this Agreement.

2.14.1.2 BellSouth will provide API with loop makeup information consisting of the composition of the loop material (copper/fiber); the existence, location and type of equipment on the loop, including but not limited to digital loop carrier or other remote concentration devises, feeder/distribution interfaces, bridge taps, load coils, pair-gain devices; the loop length; and the wire gauge. The LMUSI may be utilized by API for the purpose of determining whether the loop requested is capable of supporting DSL service or other advanced data services. The determination shall be made solely by API and BellSouth shall not be liable in any way for the performance of the advanced data services provisioned over said loop.

2.14.1.3 BellSouth's LMU information is provided to API as it exists either in BellSouth's databases or in its hard copy facility records. BellSouth does not guarantee accuracy or reliability of the LMU information provided.

2.14.1.4 BellSouth offers LMU information for the sole purpose of allowing API to determine whether, in API's judgment, BellSouth's loops will support the specific services that API wishes to provide over those loops. API may choose to use equipment that it deems will enable it to provide a certain type and level of service over a particular BellSouth loop; however, such configurations may not match BellSouth's or the industry's standards and specifications for the intended type and level of service. Accordingly, API shall be responsible for insuring that the specific loop type (ADSL, HDSL, or otherwise) ordered on the LSR matches the LMU of the facility requested. API bears full responsibility for being knowledgeable of BellSouth's technical standards and the specifications of BellSouth's loops. API bears full responsibility for making the appropriate ordering decisions of matching BellSouth loops with API's equipment for accomplishing API's end goal for the intended service it wishes to provide its end-user(s). API is fully responsible for any of its service configurations that may differ from BellSouth's technical standard for the loop type ordered.

2.14.2 <u>Submitting Loop Makeup Service Inquiries</u>

2.14.2.1 API will be able to obtain LMU information by submitting a LMUSI mechanically or manually. **Mechanized** LMUSIs should be submitted through BellSouth's Operational Support Systems interfaces. After obtaining the resulting loop data from the mechanized LMUSI process, if API determines that it needs further loop data information in order to make a determination of loop service capability, API may initiate a separate manual SI for a separate nonrecurring charge as set forth in Section 2.14.3. Mechanized LMU has been made available for limited deployment to those CLECs that have effective X-Digital Subscriber Line (xDSL)

Beta Test Agreements in place with BellSouth. CLECs will be notified once a successful Beta Test has been completed, and mechanized LMU shall then be available to API.

2.14.2.2 **Manual** LMUSIs shall be submitted on the preordering manual LMUSI form by means of fax or electronic-mail to BellSouth's Complex Resale Support Group (CRSG)/Account Team utilizing the Preordering Loop Makeup Service Inquiry form. The standard service interval for the return of a Loop Makeup Manual Service Inquiry is seven business days. This service interval is distinct from the interval applied to the subsequent service order. Manual LMUSIs are not subject to expedite requests.

2.14.3 LMUSI Types and Associated Charges

API may request LMU information by submitting LMUSIs in accordance with the rate elements in Exhibit C.

2.14.3.1 API will be assessed a nonrecurring charge for each facility queried as specified in Exhibit C. Rates for all states are interim and subject to true-up pending approval of final rates by the respective State Commissions. True-ups will be retroactive to the effective date of this Agreement.

2.14.3.2 API may reserve facilities for up to four (4) days in connection with a LMUSI. Reserved facilities for which API does not plan to place a UNE local service request (LSR) should be cancelled by API. Should API wish to cancel a reservation on a spare facility, the cancellation will require a facility reservation number (RESID/FRN).

2.14.3.3 The reservation holding timeframe is a maximum of four days from the time that BellSouth's LMU data is returned to API for the facility queried. During this holding time and prior to API's placing an LSR, the reserved facilities are rendered unavailable to other customers, whether for CLEC(s) or for BellSouth. Notwithstanding the foregoing, BellSouth does not guarantee that a reservation will assure API's ability to order the exact facility reserved.

2.14.3.4 If API does not submit an LSR for a UNE service on a reserved facility within the four-day reservation timeframe, the reservation of that spare facility will become invalid and the facility will be released.

2.14.3.5 Charges for preordering LMUSI are separate from any charges associated with ordering other services from BellSouth.

2.14.4 Ordering of Other UNE Services

2.14.4.1 Whenever API has reserved a facility through BellSouth's preordering LMU service, should API seek to place a subsequent UNE LSR on a reserved facility, API shall provide BellSouth the RESID/FRN of the single spare facility on the

appropriate UNE LSR., API will be billed the appropriate rate element for the specific type UNE loop ordered by API as set forth in this Attachment. API will not be billed any additional Loop Makeup charges for the loop so ordered. Should API choose to place a UNE LSR having previously submitted a request for *preordering LMU without a reservation*, API will be billed the appropriate rate element for the specific UNE loop ordered as well as additional Loop Makeup charges as set forth in this Attachment. Rates are provided in Exhibit C in this Attachment.

2.14.4.2 Where API submits an LSR to order facilities reserved during the LMUSI process, BellSouth will use its best efforts to assign to API the facility reserved as indicated on the return of the LMU. Multi-facility reservations per single RESID/FRN as provided with the mechanized LMUSI process are less likely to result in the specific assignment requested by API. For those occasions when BellSouth cannot assign the specific facility reserved by API during the LMU pre-ordering transaction, due to incomplete or incorrect information provided by API during the ordering process, BellSouth will assign to API, subject to availability, a facility that meets the BellSouth technical standards of the BellSouth type loop as ordered by API. If the ordered loop type is not available, API may utilize the Unbundled Loop Modification process or the Special Construction process, as applicable, to obtain the loop type ordered.

2.15 **Rates**

The prices that API shall pay to BellSouth for Network Elements and Other Services are set forth in Exhibit C to this Attachment. If API purchases a service(s) from a tariff, all terms and conditions and rates as set forth in such tariff shall apply.

2.16 **Operational Support Systems (OSS)**

The terms, conditions and rates for OSS are as set forth in Section 2.13 of this Attachment.

3. High Frequency Spectrum Network Element

3.1 General

3.1.1 BellSouth shall provide API access to the high frequency portion of the local loop as an unbundled network element only where BellSouth is the voice service provider to the end user ("High Frequency Spectrum") at the rates set forth in Exhibit C. BellSouth shall provide API with the High Frequency Spectrum irrespective of whether BellSouth chooses to offer xDSL services on the loop.

3.1.2 The High Frequency Spectrum is defined as the frequency range above the voiceband on a copper loop facility carrying analog circuit-switched voiceband transmissions. Access to the High Frequency Spectrum is intended to allow API the ability to provide Digital Subscriber Line ("xDSL") data services to the end user for which BellSouth provides voice services. The High Frequency Spectrum shall be available for any version of xDSL presumed acceptable for deployment pursuant to 47 CFR Section 51.230, including, but not limited to, ADSL, HDSL, and any other xDSL technology that is presumed to be acceptable for deployment pursuant to FCC rules. BellSouth will continue to have access to the low frequency portion of the loop spectrum (from 300 Hertz to at least 3000 Hertz, and potentially up to 3400 Hertz, depending on equipment and facilities) for the purposes of providing voice service. API shall only use xDSL technology that is within the PSD mask parameters set forth in T1.413 or other applicable industry standards. API shall provision xDSL service on the High Frequency Spectrum in accordance with the applicable Technical Specifications and Standards.

3.1.3 The following loop requirements are necessary for API to be able to access the High Frequency Spectrum: an unconditioned, 2-wire copper loop. An unconditioned loop is a copper loop with no load coils, low-pass filters, range extenders, DAMLs, or similar devices and minimal bridged taps consistent with ANSI T1.413 and T1.601. BellSouth will provide API access to the Unbundled Loop Modification (Line Conditioning), in accordance with Section 2.2 of this Agreement. BellSouth is not required to condition a loop for access to the high frequency spectrum if conditioning of that loop significantly degrades BellSouth's voice service. If API requests that BellSouth condition a loop longer than 18,000 ft. and such conditioning significantly degrades the voice services on the loop, API shall pay for the loop to be restored to its original state.

3.1.4 API's termination point is the point of termination for API on the toll main distributing frame in the central office ("Termination Point"). BellSouth will use jumpers to connect API's connecting block to the splitter. The splitter will route the High Frequency Spectrum on the circuit to API's xDSL equipment in API's collocation space.

3.1.5 API shall have access to the splitter for test purposes, irrespective of where the splitter is placed in the BellSouth premises.

3.2 Provisioning of High Frequency Spectrum and Splitter Space

3.2.1 BellSouth will provide API with access to the High Frequency Spectrum as follows:

3.2.1.1 BellSouth will install splitters within forty-two (42) calendar days of API's submission of such order to the BellSouth Complex Resale Support Group; provided, however, that in the event BellSouth did not have reasonable notice that a particular central office was to have a splitter installed therein, the forty-two (42)

day interval shall not apply. Collocation itself or an application for collocation will serve as reasonable notice.

3.2.1.2 Once a splitter is installed on behalf of API in a central office, API shall be entitled to order the High Frequency Spectrum on lines served out of that central office.

3.2.1.2.1 BellSouth will bill and API shall pay the SOMAN and SOMEC charges as described in Section 2.13 of this Agreement when API orders High Frequency Spectrum for end-user service.

3.2.1.3 BellSouth will select, purchase, install, and maintain a central office POTS splitter and provide API access to data ports on the splitter. At least 30 days before making a change in splitter suppliers, BellSouth will provide API with a carrier notification letter, informing API of change. API shall purchase ports on the splitter as set forth more fully below.

3.2.1.4 BellSouth will install the splitter in (i) a common area close to the API collocation area, if possible; or (ii) in a BellSouth relay rack as close to the API DS0 termination point as possible. For purposes of this section, a common area is defined as an area in the central office in which both Parties have access to a common test access point. BellSouth will cross-connect the splitter data ports to a specified API DS0 at such time that a API end user's service is established.

3.2.1.5 The High Frequency Spectrum shall only be available on loops on which BellSouth is also providing, and continues to provide, analog voice service directly to the end user. In the event the end-user terminates its BellSouth provided voice service for any reason, and API desires to continue providing xDSL service on such loop, API shall be required to purchase a full stand-alone loop unbundled network element. In the event BellSouth disconnects the end-user's voice service pursuant to its tariffs or applicable law, and API desires to continue providing xDSL service on such loop, API shall be permitted to continue using the line by purchasing the full stand-alone loop unbundled network element. To the extent commercially practicable, BellSouth shall give API notice in a reasonable time prior to disconnect, which notice shall give API an adequate opportunity to notify BellSouth of its intent to purchase such loop. In those cases in which BellSouth no longer provides voice service to the end user and API purchases the full stand-alone loop, API may elect the type of loop it will purchase. API will pay the appropriate recurring and non-recurring rates for such loop as set forth in Exhibit C to this Attachment. In the event API purchases a voice grade loop, API acknowledges that such loop may not remain xDSL compatible.

3.2.1.6 Only one competitive local exchange carrier shall be permitted access to the High Frequency Spectrum of any particular loop.

3.3 Ordering

3.3.1 To order High Frequency Spectrum on a particular loop, API must have a DSLAM collocated in the central office that serves the end-user of such loop. API may order splitters in a central office once it has installed its Digital Subscriber Line Access Multiplexer ("DSLAM") in that central office. BellSouth will install these splitters within the interval provided in paragraph 3.2.1.1.

3.3.2 BellSouth will devise a splitter order form that allows API to order splitter ports in increments of 24 ports.

3.3.2.1 BellSouth will provide API the Local Service Request ("LSR") format to be used when ordering the High Frequency Spectrum.

3.3.3 BellSouth will provide access to the High Frequency Spectrum within the following target intervals: BellSouth will return a manual Firm Order Confirmation ("FOC") in no more than two (2) business days after receipt of a valid, error free manual LSR. When API submits an electronic LSR for High Frequency Spectrum, BellSouth will return a FOC in four (4) hours ninety-five percent (95%) of the time, or, for orders that do not flow-through, in two (2) business days. BellSouth will provide API with access to the High Frequency Spectrum at the following target intervals:

3.3.3.1 For 1-5 lines at the same address within three (3) business days from BellSouth's issuance of a FOC; 6-10 lines at same address within 5 business days from BellSouth's issuance of a FOC; and more than 10 lines at the same address is to be negotiated.

3.3.4 BellSouth will provide to API BellSouth's Loop Qualification System that BellSouth uses to qualify loops for its own ADSL offering as described below.

3.3.5 BellSouth will provide API access to the Preordering Loop Makeup (LMU), in accordance with Section 2.14 of this Agreement. BellSouth shall bill and API shall pay the rates for such services, as described in Exhibit C.

3.4 Maintenance and Repair

3.4.1 API shall have access, for test, repair, and maintenance purposes, to any loop as to which it has access to the High Frequency Spectrum. API may access the loop at the point where the combined voice and data signal exits the central office splitter.

3.4.2 BellSouth will be responsible for repairing voice services and the physical line between the network interface device at the customer's premises and the Termination Point of demarcation in the central office. API will be responsible for repairing data services. Each Party will be responsible for maintaining its own equipment.

3.4.3 API shall inform its end users to direct data problems to API, unless both voice and data services are impaired, in which event the end users should call BellSouth.

3.4.4 Once a Party has isolated a trouble to the other Party's portion of the loop, the Party isolating the trouble shall notify the end user that the trouble is on the other Party's portion of the loop.

3.4.5 In the event API's deployment of xDSL on the High Frequency Spectrum significantly degrades the performance of other advanced services or of BellSouth's voice service on the same loop, BellSouth shall notify API and allow twenty-four (24) hours to cure the trouble. If API fails to resolve the trouble, BellSouth may discontinue API's access to the High Frequency Spectrum on such loop.

3.5 **Rates**

The prices that API shall pay to BellSouth for Network Elements and Other Services are set forth in Exhibit C to this Attachment. If API purchases a service(s) from a tariff, all terms and conditions and rates as set forth in such tariff shall apply.

3.6 **Operational Support Systems (OSS)**

The terms, conditions and rates for OSS are as set forth in Section 2.13 of this Attachment.

4. Switching

All of the negotiated rates, terms and conditions set forth in this Section pertain to the provision of local and tandem switching.

4.1 **Local Switching**

4.1.1 BellSouth shall provide non-discriminatory access to local circuit switching capability, and local tandem switching capability, on an unbundled basis, except as set forth below in Section 4.1.3.3 to API for the provision of a telecommunications service. BellSouth shall provide non-discriminatory access to packet switching capability on an unbundled basis to API for the provision of a telecommunications service only in the limited circumstance described below in Section 4.4.

4.1.2 Except as otherwise provided herein, BellSouth shall not impose any restrictions on API regarding the use of Switching Capabilities purchased from BellSouth provided such use does not result in demonstrable harm to either the BellSouth

network or personnel or the use of the BellSouth network by BellSouth or any other telecommunication carrier.

4.1.3 **Local Circuit Switching Capability, including Tandem Switching Capability**

4.1.3.1 Definition

Local Circuit Switching Capability is defined as: (A) line-side facilities, which include, but are not limited to, the connection between a loop termination at a main distribution frame and a switch line card; (B) trunk-side facilities, which include, but are not limited to, the connection between trunk termination at a trunk-side cross-connect panel and a switch trunk card; and (C) all features, functions, and capabilities of the switch, which include, but are not limited to: (1) the basic switching function of connecting lines to lines, line to trunks, trunks to lines, and trunks to trunks, as well as the same basic capabilities made available to BellSouth's customers, such as a telephone number, white page listings, and dial tone; and (2) all other features that the switch is capable of providing, including but not limited to customer calling, customer local area signaling service features, and Centrex, as well as any technically feasible customized routing functions provided by the switch; (D) switching provided by remote switching modules.

4.1.3.2 Notwithstanding BellSouth's general duty to unbundle local circuit switching, BellSouth shall not be required to unbundle local circuit switching for API when API serves end-users with four (4) or more voice-grade (DS-0) equivalents or lines in locations served by BellSouth's local circuit switches, which are in the following MSAs: Atlanta, GA; Miami, FL; Orlando, FL; Ft. Lauderdale, FL; Charlotte-Gastonia-Rock Hill, NC; Greensboro-Winston Salem-High Point, NC; Nashville, TN; and New Orleans, LA, and BellSouth has provided non-discriminatory cost based access to the Enhanced Extended Link (EEL) throughout Density Zone 1 as determined by NECA Tariff No. 4 as in effect on January 1, 1999.

4.1.3.3 In the event that API orders local circuit switching for a single end user account name at a single physical end user location with four (4) or more 2-wire voice-grade loops from a BellSouth central office in an MSA listed above, BellSouth shall charge API the market based rate in Exhibit C for use of the local circuit switching functionality for the affected facilities.

4.1.3.4 A featureless port is one that has a line port, switching facilities, and an interoffice port. A featured port is a port that includes all features then capable or a number of then capable features specifically requested by API. Any features that are not currently then capable but are technically feasible through the switch can be requested through the NBR/BFR process.

4.1.3.5 BellSouth will provide to API customized routing of calls: (i) to a requested directory assistance services platform; (ii) to an operator services platform

pursuant to Section 10 of Attachment 2; (iii) for API's PIC'ed toll traffic in a two (2) PIC environment to an alternative OS/DA platform designated by API. API customers may use the same dialing arrangements as BellSouth customers.

4.1.3.6 Remote Switching Module functionality is included in Switching Capability. The switching capabilities used will be based on the line side features they support.

4.1.3.7 Switching Capability will also be capable of routing local, intraLATA, interLATA, and calls to international customer's preferred carrier; call features (e.g. call forwarding) and Centrex capabilities.

4.1.3.8 Where required to do so in order to comply with an effective Commission order, BellSouth will provide to API purchasing local BellSouth switching and reselling BellSouth local exchange service under Attachment 1, selective routing of calls to a requested directory assistance services platform or operator services platform. API customers may use the same dialing arrangements as BellSouth customers, but obtain a API branded service.

4.1.4 Technical Requirements

4.1.4.1 The requirements set forth in this Section apply to Local Switching, but not to the Data Switching function of Local Switching.

4.1.4.2 Local Switching shall be equal to or better than the requirements for Local Switching set forth in the applicable industry standard technical references.

4.1.4.3 When applicable, BellSouth shall route calls to the appropriate trunk or lines for call origination or termination.

4.1.4.4 Subject to this section, BellSouth shall route calls on a per line or per screening class basis to (1) BellSouth platforms providing Network Elements or additional requirements (2) Operator Services platforms, (3) Directory Assistance platforms, and (4) Repair Centers. Any other routing requests by API will be made pursuant to the BFR/NBR Process as set forth in General Terms and Conditions.

4.1.4.5 BellSouth shall provide unbranded recorded announcements and call progress tones to alert callers of call progress and disposition.

4.1.4.6 BellSouth shall activate service for API customer or network interconnection on any of the Local Switching interfaces. This includes provisioning changes to change a customer from BellSouth's services to API's services without loss of switch feature functionality as defined in this Agreement.

4.1.4.7 BellSouth shall perform routine testing (e.g., Mechanized Loop Tests (MLT) and test calls such as 105, 107 and 108 type calls) and fault isolation on a mutually agreed upon schedule.

4.1.4.8 BellSouth shall repair and restore any equipment or any other maintainable component that may adversely impact Local Switching.

4.1.4.9 BellSouth shall control congestion points such as those caused by radio station call-ins, and network routing abnormalities. All traffic shall be restricted in a non-discriminatory manner.

4.1.4.10 BellSouth shall perform manual call trace and permit customer originated call trace.

4.1.4.11 Special Services provided by BellSouth will include the following:

4.1.4.11.1 Telephone Service Prioritization;

4.1.4.11.2 Related services for handicapped;

4.1.4.11.3 Soft dial tone where required by law; and

4.1.4.11.4 Any other service required by law.

4.1.4.12 BellSouth shall provide Switching Service Point (SSP) capabilities and signaling software to interconnect the signaling links destined to the Signaling Transfer Point Switch (STPS). These capabilities shall adhere to the technical specifications set forth in the applicable industry standard technical references.

4.1.4.13 BellSouth shall provide interfaces to adjuncts through Telcordia (formerly BellCore) standard interfaces. These adjuncts can include, but are not limited to, the Service Circuit Node and Automatic Call Distributors.

4.1.4.14 BellSouth shall provide performance data regarding a customer line, traffic characteristics or other measurable elements to API, upon a reasonable request from API. API will pay BellSouth for all costs incurred to provide such performance data through the Business Opportunity Request process.

4.1.4.15 BellSouth shall offer Local Switching that provides feature offerings at parity to those provided by BellSouth to itself or any other Party.

4.1.4.16 BellSouth shall offer to API all AIN triggers in connection with its SMS/SCE offering which are supported by BellSouth for offering AIN-based services

4.1.4.17 Where capacity exists, BellSouth shall assign each API customer line the class of service designated by API (e.g., using line class codes or other switch specific provisioning methods), and shall route directory assistance calls from API customers to API directory assistance operators at API's option.

4.1.4.18 Where capacity exists, BellSouth shall assign each API customer line the class of services designated by API (e.g., using line class codes or other switch specific

provisioning methods) and shall route operator calls from API customers to API operators at API's option. For example, BellSouth may translate 0- and 0+ intraLATA traffic, and route the call through appropriate trunks to API Operator Services Position System (OSPS). Calls from Local Switching must pass the ANI-II digits unchanged.

4.1.4.19 Local Switching shall be offered in accordance with the technical specifications set forth in the applicable industry standard references.

4.1.5 Interface Requirements. BellSouth shall provide the following interfaces to loops:

4.1.5.1 Standard Tip/Ring interface including loopstart or groundstart, on-hook signaling (e.g., for calling number, calling name and message waiting lamp);

4.1.5.2 Coin phone signaling;

4.1.5.3 Basic Rate Interface ISDN adhering to appropriate Telcordia (formerly BellCore) Technical Requirements;

4.1.5.4 Two-wire analog interface to PBX;

4.1.5.5 Four-wire analog interface to PBX;

4.1.5.6 Four-wire DS1 interface to PBX or customer provided equipment (e.g. computers and voice response systems);

4.1.5.7 Primary Rate ISDN to PBX adhering to ANSI standards Q.931, Q.932 and appropriate Telcordia (formerly BellCore) Technical Requirements;

4.1.5.8 Switched Fractional DS1 with capabilities to configure Nx64 channels (where N = 1 to 24); and

4.1.5.9 Loops adhering to Telcordia (formerly BellCore) TR-NWT-08 and TR-NWT-303 specifications to interconnect Digital Loop Carriers.

4.1.6 BellSouth shall provide access to the following but not limited to:

4.1.6.1 SS7 Signaling Network or Multi-Frequency trunking if requested by API;

4.1.6.2 Interface to API operator services systems or Operator Services through appropriate trunk interconnections for the system; and

4.1.6.3 Interface to API Directory Assistance Services through the API switched network or to Directory Assistance Services through the appropriate trunk interconnections for the system; and 950 access or other API required access to interexchange carriers as requested through appropriate trunk interfaces.

4.2 **Tandem Switching**

4.2.1 Definition

Tandem Switching is the function that establishes a communications path between two switching offices through a third switching office (the Tandem switch).

4.2.2 Technical Requirements

Tandem Switching shall have the same capabilities or equivalent capabilities as those described in Bell Communications Research TR-TSY-000540 Issue 2R2, Tandem Supplement, 6/1/90. The requirements for Tandem Switching include, but are not limited to the following:

4.2.2.1 Tandem Switching shall provide signaling to establish a tandem connection;

4.2.2.2 Tandem Switching will provide screening as jointly agreed to by API and BellSouth;

4.2.2.3 Tandem Switching shall provide Advanced Intelligent Network triggers supporting AIN features where such routing is not available from the originating end office switch, to the extent such Tandem switch has such capability;

4.2.2.4 Tandem Switching shall provide access to Toll Free number portability database as designated by API;

4.2.2.5 Tandem Switching shall provide all trunk interconnections discussed under the "Network Interconnection" section (e.g., SS7, MF, DTMF, DialPulse, PRI-ISDN, DID, and CAMA-ANI (if appropriate for 911));

4.2.2.6 Tandem Switching shall provide connectivity to PSAPs where 911 solutions are deployed and the tandem is used for 911; and

4.2.2.7 Where appropriate, Tandem Switching shall provide connectivity to transit traffic to and from other carriers.

4.2.3 Tandem Switching shall accept connections (including the necessary signaling and trunking interconnections) between end offices, other tandems, IXCs, ICOs, CAPs and CLEC switches.

4.2.4 Tandem Switching shall provide local tandeming functionality between two end offices including two offices belonging to different CLECs (e.g., between a CLEC end office and the end office of another CLEC).

4.2.5 Tandem Switching shall preserve CLASS/LASS features and Caller ID as traffic is processed.

4.2.6 Tandem Switching shall record billable events and send them to the area billing centers designated by API. Tandem Switching will provide recording of all billable events as jointly agreed to by API and BellSouth.

4.2.7 Upon a reasonable request from API, BellSouth shall perform routine testing and fault isolation on the underlying switch that is providing Tandem Switching and all its interconnections. The results and reports of the testing shall be made immediately available to API.

4.2.8 BellSouth shall maintain API's trunks and interconnections associated with Tandem Switching at least at parity to its own trunks and interconnections.

4.2.9 BellSouth shall control congestion points and network abnormalities. All traffic will be restricted in a non-discriminatory manner.

4.2.10 Selective Call Routing through the use of line class codes is not available through the use of tandem switching. Selective Call Routing through the use of line class codes is an end office capability only. Detailed primary and overflow routing plans for all interfaces available within BellSouth's switching network shall be mutually agreed to by API and BellSouth.

4.2.11 Tandem Switching shall process originating toll-free traffic received from API's local switch.

4.2.12 In support of AIN triggers and features, Tandem Switching shall provide SSP capabilities when these capabilities are not available from the Local Switching Network Element, to the extent such Tandem Switch has such capability.

4.2.13 Interface Requirements

4.2.13.1 Tandem Switching shall provide interconnection to the E911 PSAP where the underlying Tandem is acting as the E911 Tandem.

4.2.13.2 Tandem Switching shall interconnect, with direct trunks, to all carriers with which BellSouth interconnects.

4.2.13.3 BellSouth shall provide all signaling necessary to provide Tandem Switching with no loss of feature functionality.

4.2.13.4 Tandem Switching shall interconnect with API's switch, using two-way trunks, for traffic that is transiting via BellSouth's network to interLATA or intraLATA carriers. At API's request, Tandem Switching shall record and keep records of traffic for billing.

4.2.13.5 Tandem Switching shall provide an alternate final routing pattern for API's traffic overflowing from direct end office high usage trunk groups.

4.2.13.6 Tandem Switching shall be equal to or better than the requirements for Tandem Switching set forth in the applicable technical references.

4.3 **AIN Selective Carrier Routing for Operator Services, Directory Assistance and Repair Centers**

4.3.1 BellSouth will provide AIN Selective Carrier Routing at the request of API. AIN Selective Carrier Routing will provide API with the capability of routing operator calls, 0+ and 0- and 0+ NPA (LNPA) 555-1212 directory assistance, 1+411 directory assistance and 611 repair center calls to pre-selected destinations.

4.3.2 API shall order AIN Selective Carrier Routing through its Account Team. AIN Selective Carrier Routing must first be established regionally and then on a per central office, per state basis.

4.3.3 AIN Selective Carrier Routing is not available in DMS 10 switches.

4.3.4 Where AIN Selective Carrier Routing is utilized by API, the routing of API's end user calls shall be pursuant to information provided by API and stored in BellSouth's AIN Selective Carrier Routing Service Control Point database. AIN Selective Carrier Routing shall utilize a set of Line Class Codes (LCCs) unique to a basic class of service assigned on an 'as needed' basis. The same LCCs will be assigned in each central office where AIN Selective Carrier Routing is established.

4.3.5 Upon ordering of AIN Selective Carrier Routing Regional Service, API shall remit to BellSouth the Regional Service Order non-recurring charges set forth in Exhibit C of this Attachment. There shall be a non-recurring End Office Establishment Charge per office due at the addition of each central office where AIN Selective Carrier Routing will be utilized. Said non-recurring charge shall be as set forth in Exhibit C of this Attachment. For each API end user activated, there shall be a non-recurring End User Establishment charge as set forth in Exhibit C of this Attachment, payable to BellSouth pursuant to the terms of the General Terms and Conditions, incorporated herein by this reference. API shall pay the AIN Selective Carrier Routing Per Query Charge set forth in Exhibit C of this Attachment.

4.3.6 This Regional Service Order non-recurring charge will be non-refundable and will be paid with 1/2 due up-front with the submission of all fully completed required forms, including: Regional Selective Carrier Routing (SCR) Order Request-Form A, Central Office AIN Selective Carrier Routing (SCR) Order Request - Form B, AIN_SCR Central Office Identification Form - Form C, AIN_SCR Routing Options Selection Form - Form D, and Routing Combinations Table - Form E. BellSouth has 30 days to respond to the client's fully completed firm order as a Regional Service Order. With the delivery of this firm order response to the client, BellSouth considers that the delivery schedule of this service commences.

The remaining 1/2 of the Regional Service Order payment must be paid when at least 90% of the Central Offices listed on the original order have been turned up for the service.

4.3.7 The non-recurring End Office Establishment Charge will be billed to the client following BellSouth's normal monthly billing cycle for this type of order.

4.3.8 End-User Establishment Orders will not be turned-up until the second payment is received for the Regional Service Order. The non-recurring End-User Establishment Charges will be billed to the client following BellSouth's normal monthly billing cycle for this type of order.

4.3.9 Additionally, the AIN Selective Carrier Routing Per Query Charge will be billed to the client following the normal billing cycle for per query charges.

4.3.10 All other network components needed, for example, unbundled switching and unbundled local transport, etc, will be billed per contracted rates.

4.4 **Packet Switching Capability**

4.4.1 Definition

The packet switching capability network element is defined as the function of routing or forwarding packets, frames, cells or other data units based on address or other routing information contained in the packets, frames, cells or other data units.

4.4.2 BellSouth shall be required to provide non-discriminatory access to unbundled packet switching capability only where each of the following conditions are satisfied:

4.4.2.1 BellSouth has deployed digital loop carrier systems, including but not limited to, integrated digital loop carrier or universal digital loop carrier systems; or has deployed any other system in which fiber optic facilities replace copper facilities in the distribution section (e.g., end office to remote terminal, pedestal or environmentally controlled vault);

4.4.2.2 There are no spare copper loops capable of supporting the xDSL services API seeks to offer;

4.4.2.3 BellSouth has not permitted API to deploy a DSLAM at the remote terminal, pedestal or environmentally controlled vault or other interconnection point, nor has API obtained a virtual collocation arrangement at these sub-loop interconnection points as defined by 47 CFR § 51.319 (b); and

4.4.2.4 BellSouth has deployed packet switching capability for its own use.

4.4.3 If there is a dispute as to whether BellSouth must provide Packet Switching, such dispute will be resolved according to the dispute resolution process set forth in Section 12 of the General Terms and Conditions of this Agreement, incorporated herein by this reference.

4.5 **Interoffice Transmission Facilities**

BellSouth shall provide nondiscriminatory access, in accordance with FCC Rule 51.311 and Section 251(c)(3) of the Act, to interoffice transmission facilities on an unbundled basis to API for the provision of a telecommunications service.

4.6 **Rates**

The prices that API shall pay to BellSouth for Network Elements and Other Services are set forth in Exhibit C to this Attachment. If API purchases a service(s) from a tariff, all terms and conditions and rates as set forth in such tariff shall apply.

4.7 **Operational Support Systems (OSS)**

The terms, conditions and rates for OSS are as set forth in Section 2.13 of this Attachment.

5. Unbundled Network Element Combinations

5.1. Unbundled Network Element Combinations shall include: 1) Enhanced Extended Links (EELs); 2) UNE Loops/Special Access Combinations; 3) Loop/Port Combinations; and 4) Transport Combinations.

5.2. For purposes of this Section, references to "Currently Combined" network elements shall mean that such network elements are in fact already combined by BellSouth in the BellSouth network to provide service to a particular end user at a particular location.

5.3. Enhanced Extended Links (EELs)

5.3.1 Where facilities permit and where necessary to comply with an effective FCC and/or State Commission order, or as otherwise mutually agreed by the Parties, BellSouth shall offer access to loop and transport combinations, also known as the Enhanced Extended Link ("EEL") as defined in Section 5.3.2 below.

5.3.2 Subject to Section 5.3.3 below, BellSouth will provide access to the EEL in the combinations set forth in Section 5.3.4 following. This offering is intended to provide connectivity from an end user's location through that end user's SWC to API's POP serving wire center. The circuit must be connected to API's switch for the purpose of provisioning telephone exchange service to API's end-user customers. The EEL will be connected to API's facilities in API's collocation

space at the POP SWC, or API may purchase BellSouth's access facilities between API's POP and API's collocation space at the POP SWC.

5.3.3 BellSouth shall provide EEL combinations to API in Georgia regardless of whether or not such EELs are Currently Combined. In all other states, BellSouth shall make available to API those EEL combinations described in Section 5.3.4 below only to the extent such combinations are Currently Combined. Furthermore, BellSouth will make available EEL combinations to API in density Zone 1, as defined in 47 CFR 69.123 as of January 1, 1999, in the Atlanta, GA; Miami, FL; Orlando, FL; Ft. Lauderdale, FL; Charlotte-Gastonia-Rock Hill, NC; Greensboro-Winston Salem-High Point, NC; Nashville, TN; and New Orleans, LA, MSAs regardless of whether or not such EELs are Currently Combined. Except as stated above, EELs will be provided to API only to the extent such network elements are Currently Combined.

5.3.4 EEL Combinations

5.3.4.1 DS1 Interoffice Channel + DS1 Channelization + 2-wire VG Local Loop

5.3.4.2 DS1 Interoffice Channel + DS1 Channelization + 4-wire VG Local Loop

5.3.4.3 DS1 Interoffice Channel + DS1 Channelization + 2-wire ISDN Local Loop

5.3.4.4 DS1 Interoffice Channel + DS1 Channelization + 4-wire 56 kbps Local Loop

5.3.4.5 DS1 Interoffice Channel + DS1 Channelization + 4-wire 64 kbps Local Loop

5.3.4.6 DS1 Interoffice Channel + DS1 Local Loop

5.3.4.7 DS3 Interoffice Channel + DS3 Local Loop

5.3.4.8 STS-1 Interoffice Channel + STS-1 Local Loop

5.3.4.9 DS3 Interoffice Channel + DS3 Channelization + DS1 Local Loop

5.3.4.10 STS-1 Interoffice Channel + DS3 Channelization + DS1 Local Loop

5.3.4.11 2-wire VG Interoffice Channel + 2-wire VG Local Loop

5.3.4.12 4wire VG Interoffice Channel + 4-wire VG Local Loop

5.3.4.13 4-wire 56 kbps Interoffice Channel + 4-wire 56 kbps Local Loop

5.3.4.14 4-wire 64 kbps Interoffice Channel + 4-wire 64 kbps Local Loop

5.3.5 EEL combinations for DS1 level and above will be available only when API provides and handles at least one third of the end user's local traffic over the facility provided. In addition, on the DS1 loop portion of the combination, at least

fifty (50) percent of the activated channels must have at least five (5) percent local voice traffic individually and, for the entire DS1 facility, at least ten (10) percent of the traffic must be local voice traffic.

5.3.6 When combinations of loop and transport network elements include multiplexing, each of the individual DS1 circuits must meet the above criteria.

5.3.7 Special Access Service Conversions

5.3.7.1 API may not convert special access services to combinations of loop and transport network elements, whether or not API self-provides its entrance facilities (or obtains entrance facilities from a third party), unless API uses the combination to provide a significant amount of local exchange service, in addition to exchange access service, to a particular customer. To the extent API requests to convert any special access services to combinations of loop and transport network elements at UNE prices, API shall provide to BellSouth a letter certifying that API is providing a significant amount of local exchange service (as described in this Section) over such combinations. The certification letter shall also indicate under what local usage option API seeks to qualify for conversion of special access circuits. API shall be deemed to be providing a significant amount of local exchange service over such combinations if one of the following options is met:

5.3.7.1.1 API certifies that it is the exclusive provider of an end user's local exchange service. The loop-transport combinations must terminate at API's collocation arrangement in at least one BellSouth central office. This option does not allow loop-transport combinations to be connected to BellSouth's tariffed services. Under this option, API is the end user's only local service provider, and thus, is providing more than a significant amount of local exchange service. API can then use the loop-transport combinations that serve the end user to carry any type of traffic, including using them to carry 100 percent interstate access traffic; or

5.3.7.1.2 API certifies that it provides local exchange and exchange access service to the end user customer's premises and handles at least one third of the end user customer's local traffic measured as a percent of total end user customer local dialtone lines; and for DS1 circuits and above, at least 50 percent of the activated channels on the loop portion of the loop-transport combination have at least 5 percent local voice traffic individually, and the entire loop facility has at least 10 percent local voice traffic. When a loop-transport combination includes multiplexing, each of the individual DS1 circuits must meet this criteria. The loop-transport combination must terminate at API's collocation arrangement in at least one BellSouth central office. This option does not allow loop-transport combinations to be connected to BellSouth tariffed services; or

5.3.7.1.3 API certifies that at least 50 percent of the activated channels on a circuit are used to provide originating and terminating local dialtone service and at least 50 percent of the traffic on each of these local dialtone channels is local voice traffic,

and that the entire loop facility has at least 33 percent local voice traffic. When a loop-transport combination includes multiplexing, each of the individual DS1 circuits must meet this criteria. This option does not allow loop-transport combinations to be connected to BellSouth's tariffed services. Under this option, collocation is not required. API does not need to provide a defined portion of the end user's local service, but the active channels on any loop-transport combination, and the entire facility, must carry the amount of local exchange traffic specified in this option.

5.3.7.2 In addition, there may be extraordinary circumstances where API is providing a significant amount of local exchange service, but does not qualify under any of the three options set forth in Section 5.3.7.1. In such case, API may petition the FCC for a waiver of the local usage options set forth in the June 2, 2000 Order. If a waiver is granted, then upon API's request the Parties shall amend this Agreement to the extent necessary to incorporate the terms of such waiver for such extraordinary circumstance.

5.3.7.3 BellSouth may at its sole discretion audit API records in order to verify the type of traffic being transmitted over combinations of loop and transport network elements. The audit shall be conducted by a third party independent auditor, and API shall be given thirty days written notice of scheduled audit. Such audit shall occur no more than one time in a calendar year, unless results of an audit find noncompliance with the significant amount of local exchange service requirement. In the event of noncompliance, API shall reimburse BellSouth for the cost of the audit. If, based on its audits, BellSouth concludes that API is not providing a significant amount of local exchange traffic over the combinations of loop and transport network elements, BellSouth may file a complaint with the appropriate Commission, pursuant to the dispute resolution process as set forth in the Interconnection Agreement. In the event that BellSouth prevails, BellSouth may convert such combinations of loop and transport network elements to special access services and may seek appropriate retroactive reimbursement from API.

5.3.7.4 API may convert special access circuits to combinations of loop and transport UNEs pursuant to the terms of this Section and subject to the termination provisions in the applicable special access tariffs, if any.

5.3.8 Rates

5.3.8.1 Georgia

5.3.8.2 The non-recurring and recurring rates for the EEL Combinations of network elements set forth in 5.3.4, whether Currently Combined or new, are as set forth in Exhibit C of this Attachment.

5.3.8.3 On an interim basis, for combinations of loop and transport network elements not set forth in Section 5.3.4, where the elements are not Currently Combined but are

ordinarily combined in BellSouth's network, the non-recurring and recurring charges for such UNE combinations shall be the sum of the stand-alone non-recurring and recurring charges of the network elements which make up the combination. These interim rates shall be subject to true-up based on the Commission's review of BellSouth's cost studies.

5.3.8.4 To the extent that API seeks to obtain other combinations of network elements that BellSouth ordinarily combines in its network which have not been specifically priced by the Commission when purchased in combined form, API, at its option, can request that such rates be determined pursuant to the BFR/NBR process set forth in this Agreement.

5.3.8.5 All Other States

5.3.8.5.1 Subject to Section 5.3.2 and 5.3.3 preceding, for all other states, the non-recurring and recurring rates for the Currently Combined EEL combinations set forth in Section 5.3.4 and other Currently Combined network elements will be the sum of the recurring rates for the individual network elements plus a non recurring charge set forth in Exhibit C of this Attachment.

5.3.8.6 Multiplexing

5.3.8.6.1 Where multiplexing functionality is required in connection with loop and transport combinations, such multiplexing will be provided at the rates and on the terms set forth in this Agreement.

5.4 **Other Network Element Combinations**

5.4.1.1 In the state of Georgia, BellSouth shall make available to API, in accordance with Section 5.4.2.1 below: (1) combinations of network elements other than EELs that are Currently Combined; and (2) combinations of network elements other than EELs that are not Currently Combined but that BellSouth ordinarily combines in its network. In all other states, BellSouth shall make available to API, in accordance with Section 5.4.2.2 below, combinations of network elements other than EELs only to the extent such combinations are Currently Combined.

5.4.2 Rates

5.4.2.1 Georgia

5.4.2.1.1 The non-recurring and recurring rates for Other Network Element combinations, whether Currently Combined or new, are as set forth in Exhibit C of this Attachment.

5.4.2.1.2 On an interim basis, for Other Network Element combinations where the elements are not Currently Combined but are ordinarily combined in BellSouth's network, the non-recurring and recurring charges for such UNE combinations shall be the

sum of the stand-alone non-recurring and recurring charges of the network elements which make up the combination. These interim rates shall be subject to true-up based on the Commission's review of BellSouth's cost studies.

5.4.2.1.3 To the extent that API seeks to obtain other combinations of network elements that BellSouth ordinarily combines in its network which have not been specifically priced by the Commission when purchased in combined form, API, at its option, can request that such rates be determined pursuant to the BFR/NBR process set forth in this Agreement.

5.4.2.2 All Other States

5.4.2.2.1 For all other states, the non-recurring and recurring rates for the Other Network Element Combinations that are Currently Combined will be the sum of the recurring rates for the individual network elements plus a non recurring charge set forth in Exhibit C of this Attachment.

5.5 **UNE/Special Access Combinations**

5.5.1 Additionally, BellSouth shall make available to API a combination of an unbundled loop and tariffed special access interoffice facilities. To the extent API will require multiplexing functionality in connection with such combination, BellSouth will provide access to multiplexing within the central office pursuant to the terms, conditions and rates set forth in its Access Services Tariffs. The tariffed special access interoffice facilities and any associated tariffed services, including but not limited to multiplexing, shall not be eligible for conversion to UNEs as described in Section 5.3.7.

5.5.2 Rates

5.5.2.1 The non-recurring and recurring rates for UNE/Special Access Combinations will be the sum of the unbundled loop rates as set forth in Exhibit C and the interoffice transport rates and multiplexing rates as set forth in the Access Services Tariff.

5.6 **Port/Loop Combinations**

5.6.1 At API's request, BellSouth shall provide access to combinations of port and loop network elements, as set forth in Section 5.6.3 below, that are Currently Combined in BellSouth's network except as specified in Sections 5.6.1.1 and 5.6.1.2 below.

5.6.1.1 BellSouth shall not provide combinations of port and loop network elements on an unbundled basis in locations where, pursuant to FCC rules, BellSouth is not required to provide circuit switching as an unbundled network element.

5.6.1.2 In accordance with effective and applicable FCC rules, BellSouth shall not be required to provide circuit switching as an unbundled network element in density

Zone 1, as defined in 47 CFR 69.123 as of January 1, 1999 of the Atlanta, GA; Miami, FL; Orlando, FL; Ft. Lauderdale, FL; Charlotte-Gastonia-Rock Hill, NC; Greensboro-Winston Salem-High Point, NC; Nashville, TN; and New Orleans, LA, MSAs to API if API's customer has 4 or more DS0 equivalent lines.

5.6.2 Combinations of port and loop network elements provide local exchange service for the origination or termination of calls. BellSouth shall make available the following loop and port combinations at the terms and at the rates set forth below:

5.6.2.1 In Georgia, BellSouth shall provide to API combinations of port and loop network elements to API on an unbundled basis regardless of whether or not such combinations are Currently Combined except in those locations where BellSouth is not required to provide circuit switching, as set forth in Section 5.6.1.2 above. The rates for such combinations shall be the cost based rates set forth in Exhibit C of this Attachment.

5.6.2.2 In all other states, BellSouth shall provide to API combinations of port and loop network elements on an unbundled basis if such combinations are Currently Combined, except in those locations where BellSouth is not required to provide unbundled circuit switching, as set forth in Sections 5.6.1.1 and 5.6.1.2 above. The rates for such combinations shall be the cost based rates set forth in Exhibit C of this Attachment.

5.6.2.3 In all states other than Georgia, except in those locations where BellSouth is not required to provide unbundled circuit switching, as set forth in Sections 5.6.1.1 and 5.6.1.2, BellSouth shall provide to API combinations of port and loop network elements that are not Currently Combined. The rates for such combinations shall be negotiated by the Parties.

5.6.2.4 In those locations where BellSouth is not required to provide unbundled circuit switching, as set forth in Sections 5.6.1.1 and 5.6.1.2, BellSouth shall provide to API combinations of port and loop network elements whether or not such combinations are Currently Combined. The rates for Currently Combined combinations are the market based rates as set forth in Exhibit C. The rates for not Currently Combined combinations shall be negotiated by the Parties.

5.6.3 Combination Offerings

5.6.3.1 2-wire voice grade port, voice grade loop, unbundled end office switching, unbundled end office trunk port, common transport per mile per MOU, common transport facilities termination, tandem switching, and tandem trunk port.

5.6.3.2 2-wire voice grade DID port, voice grade loop, unbundled end office switching, unbundled end office trunk port, common transport per mile per MOU, common transport facilities termination, tandem switching, and tandem trunk port.

5.6.3.3 2-wire CENTREX port, voice grade loop, unbundled end office switching, unbundled end office trunk port, common transport per mile per MOU, common transport facilities termination, tandem switching, and tandem trunk port.

5.6.3.4 2-wire ISDN Basic Rate Interface, voice grade loop, unbundled end office switching, unbundled end office trunk port, common transport per mile per MOU, common transport facilities termination, tandem switching, and tandem trunk port.

5.6.3.5 2-wire ISDN Primary Rate Interface, DS1 loop, unbundled end office switching, unbundled end office trunk port, common transport per mile per MOU, common transport facilities termination, tandem switching, and tandem trunk port.

5.6.3.6 4-wire DS1 Trunk port, DS1 Loop, unbundled end office switching, unbundled end office trunk port, common transport per mile per MOU, common transport facilities termination, tandem switching, and tandem trunk port.

5.7 **Rates**

The prices that API shall pay to BellSouth for Network Elements and Other Services are set forth in Exhibit C to this Attachment. If API purchases a service(s) from a tariff, all terms and conditions and rates as set forth in such tariff shall apply.

5.8 **Operational Support Systems (OSS)**

The terms, conditions and rates for OSS are as set forth in Section 2.13 of this Attachment.

6. Transport, Channelization and Dark Fiber

All of the negotiated rates, terms and conditions set forth in this Section pertain to the provision of unbundled transport and dark fiber.

6.1 **Transport**

6.1.1 Interoffice transmission facility network elements include:

6.1.1.1 Dedicated transport, defined as BellSouth's transmission facilities, is dedicated to a particular customer or carrier that provides telecommunications between wire centers or switches owned by BellSouth, or between wire centers and switches owned by BellSouth and API.

6.1.1.2 Dark Fiber transport, defined as BellSouth's optical transmission facilities without attached signal regeneration, multiplexing, aggregation or other electronics;

6.1.1.3 Common (Shared) transport, defined as transmission facilities shared by more than one carrier, including BellSouth, between end office switches, between end office switches and tandem switches, and between tandem switches, in BellSouth's network.

6.2 BellSouth shall:

6.2.1 Provide API exclusive use of interoffice transmission facilities dedicated to a particular customer or carrier, or shared use of the features, functions, and capabilities of interoffice transmission facilities shared by more than one customer or carrier;

6.2.2 Provide all technically feasible transmission facilities, features, functions, and capabilities that API could use to provide telecommunications services;

6.2.3 Permit, to the extent technically feasible, API to connect such interoffice facilities to equipment designated by API, including but not limited to, API's collocated facilities; and

6.2.4 Permit, to the extent technically feasible, API to obtain the functionality provided by BellSouth's digital cross-connect systems in the same manner that BellSouth provides such functionality to interexchange carriers.

6.3 **Common (Shared) Transport**

6.3.1 <u>Definition of Common (Shared) Transport</u>

6.3.1.1 Common (Shared) Transport is an interoffice transmission path between two BellSouth end-offices, BellSouth end-office and a local tandem, or between two local tandems. Where BellSouth Network Elements are connected by intra-office wiring, such wiring is provided as a part of the Network Elements and is not Common (Shared) Transport.

6.3.2 <u>Technical Requirements of Common (Shared) Transport</u>

6.3.2.1 Common (Shared) Transport provided on DS1 or VT1.5 circuits, shall, at a minimum, meet the performance, availability, jitter, and delay requirements specified for Central Office to Central Office ("CO to CO") connections in the appropriate industry standards.

6.3.2.2 Common (Shared) Transport provided on DS3 circuits, STS-1 circuits, and higher transmission bit rate circuits, shall, at a minimum, meet the performance, availability, jitter, and delay requirements specified for CO to CO connections in the appropriate industry standards.

6.3.2.3 BellSouth shall be responsible for the engineering, provisioning, and maintenance of the underlying equipment and facilities that are used to provide Common (Shared) Transport.

6.3.2.4 At a minimum, Common (Shared) Transport shall meet all of the requirements set forth in the applicable industry standard technical references.

6.4 **Dedicated Transport**

6.4.1 Definitions

6.4.2 Dedicated Transport is defined as BellSouth transmission facilities dedicated to a particular customer or carrier that provide telecommunications between wire centers owned by BellSouth or requesting telecommunications carriers, or between switches owned by BellSouth or requesting telecommunications carriers.

6.4.3 Unbundled Local Channel

6.4.4 Unbundled Local Channel is the dedicated transmission path between API's Point of Presence and the BellSouth Serving Wire Center's collocation.

6.4.5 Unbundled Interoffice Channel.

6.4.6 Unbundled Interoffice Channel is the dedicated transmission path that provides telecommunication between BellSouth's Serving Wire Centers' collocations.

6.4.7 BellSouth shall offer Dedicated Transport in each of the following ways:

6.4.7.1 As capacity on a shared UNE facility.

6.4.7.2 As a circuit (e.g., DS0, DS1, DS3) dedicated to API. This circuit shall consist of an Unbundled Local Channel or an Unbundled Interoffice Channel or both.

6.4.8 When Dedicated Transport is provided it shall include:

6.4.8.1 Transmission equipment such as, line terminating equipment, amplifiers, and regenerators;

6.4.8.2 Inter-office transmission facilities such as optical fiber, copper twisted pair, and coaxial cable.

6.4.9 Rates for Dedicated Transport are listed in this Attachment. For those states that do not contain rates in this Attachment the rates in the applicable State Access Tariff will apply as interim rates. When final rates are developed, these interim rates will be subject to true up, and the Parties will amend the Agreement to reflect the new rates.

6.4.10 Technical Requirements

6.4.10.1 This Section sets forth technical requirements for all Dedicated Transport.

6.4.10.2 When BellSouth provides Dedicated Transport, the entire designated transmission service (e.g., DS0, DS1, DS3) shall be dedicated to API designated traffic.

6.4.10.3 BellSouth shall offer Dedicated Transport in all technologies that become available including, but not limited to, (1) DS0, DS1 and DS3 transport services, and (2) SONET at available transmission bit rates.

6.4.10.4 For DS1 or VT1.5 circuits, Dedicated Transport shall, at a minimum, meet the performance, availability, jitter, and delay requirements specified for Customer Interface to Central Office ("CI to CO") connections in the appropriate industry standards.

6.4.10.5 Where applicable, for DS3, Dedicated Transport shall, at a minimum, meet the performance, availability, jitter, and delay requirements specified for CI to CO connections in the appropriate industry standards.

6.4.10.6 BellSouth shall offer the following interface transmission rates for Dedicated Transport:

6.4.10.6.1 DS0 Equivalent;

6.4.10.6.2 DS1;

6.4.10.6.3 DS3;

6.4.10.6.4 SDH (Synchronous Digital Hierarchy) Standard interface rates in accordance with International Telecommunications Union (ITU) Recommendation G.707 and Plesiochronous Digital Hierarchy (PDH) rates per ITU Recommendation G.704.

6.4.10.6.5 When Dedicated Transport is provided, BellSouth shall design it according to BellSouth's network infrastructure to allow for the termination points specified by API.

6.4.11 At a minimum, Dedicated Transport shall meet each of the requirements set forth in the applicable industry technical references.

6.4.11.1 BellSouth Technical References:

6.4.11.2 TR-TSY-000191 Alarm Indication Signals Requirements and Objectives, Issue 1, May 1986.

6.4.11.3 TR 73501 LightGate®Service Interface and Performance Specifications, Issue D, June 1995.

6.4.11.4 TR 73525 MegaLink®Service, MegaLink Channel Service and MegaLink Plus Service Interface and Performance Specifications, Issue C, May 1996.

6.4.12 Provided that the facility is used to transport a significant amount of local exchange services API shall be entitled to convert existing interoffice transmission facilities (i.e., special access) to the corresponding interoffice transport network element option.

6.5 **Unbundled Channelization**

6.5.1 BellSouth agrees to offer access to Unbundled Channelization when available pursuant to following terms and conditions and at the rates set forth in the Attachment. Channelization will be offered with both the high and the low speed sides to be connected to collocation.

6.5.2 Definition

6.5.2.1 Unbundled Channelization (UC) provides the multiplexing capability that will allow a DS1 (1.544 Mbps) or DS3 (44.736 Mbps) or STS-1 Unbundled Network Element (UNE) or collocation cross-connect to be multiplexed or channelized at a BellSouth central office. This can be accomplished through the use of a stand-alone multiplexer or a digital cross-connect system at the discretion of BellSouth. Once UC has been installed, API can have channels activated on an as-needed basis by having BellSouth connect lower level UNEs via Central Office Channel Interfaces (COCIs).

6.5.3 Channelization capabilities will be as follows:

6.5.3.1 DS3 Channelization System: An element that channelizes a DS3 signal into 28 DS1s/STS-1s.

6.5.3.2 DS1 Channelization System: An element that channelizes a DS1 signal into 24 DS0s.

6.5.3.3 Central Office Channel Interfaces (COCI): Elements that can be activated on a channelization system.

6.5.4 DS1 Central Office Channel Interface elements can be activated on a DS3 Channelization System.

6.5.5 Voice Grade and Digital Data Central Office Channel Interfaces can be activated on a DS1 Channelization System.

6.5.6 AMI and B8ZS line coding with either Super Frame (SF) and Extended Super Frame (ESF) framing formats will be supported as options.

6.5.7 COCI will be billed on the lower level UNE order that is interfacing with the UC arrangement and will have to be compatible with those UNEs.

6.5.8 Technical Requirements

6.5.8.1 In order to assure proper operation with BellSouth provided central office multiplexing functionality, the customer's channelization equipment must adhere strictly to form and protocol standards. Separate standards exist for the multiplex channel bank, for voice frequency encoding, for various signaling schemes, and for subrate digital access.

6.5.8.2 DS0 to DS1 Channelization

6.5.8.2.1 The DS1 signal must be framed utilizing the framing structure defined in ANSI T1.107, Digital Hierarchy Formats Specifications and ANSI T1.403.02, DS1 Robbed-bit Signaling State Definitions. DS0 to DS1 Channelization requirements are essential the same as defined in BellSouth Technical Reference 73525, MegaLink® Service, MegaLink® Channel Service, MegaLink® Plus Service, and MegaLink® Light Service Interface and Performance Specification.

6.5.8.3 DS1 to DS3 Channelization

6.5.8.3.1 The DS3 signal must be framed utilizing the framing structure define in ANSI T1.107, Digital Hierarchy Formats Specifications. DS1 to DS3 Channelization requirements are essentially the same as defined in BellSouth Technical Reference 73501, LightGate® Service Interface and Performance Specifications. The asynchronous M13 multiplex format (combination of M12 and M23 formats) is specified for terminal equipment that multiplexes 28 DS1s into a DS3.

6.5.8.4 DS1 to STS Channelization

6.5.8.4.1 The STS-1 signal must be framed utilizing the framing structure define in ANSI T1.105, Synchronous Optical Network (SONET) – Basic Description Including Multiplex Structure, Rates and Formats and T1.105.02, Synchronous Optical Network (SONET) – Payload Mappings. DS1 to STS Channelization requirements are essentially the same as defined in BellSouth Technical Reference TR 73501, LightGate® Service Interface and Performance Specifications.

6.6 **Dark Fiber**

6.6.1 <u>Definition</u>

6.6.2 Dark Fiber is optical transmission facilities without attached multiplexing, aggregation or other electronics that connects two points within BellSouth's network. Dark Fiber is unused strands of optical fiber. It may be strands of optical fiber existing in aerial or underground structure. No line terminating elements

terminated to such strands to operationalize its transmission capabilities will be available.

6.6.3 Requirements

6.6.3.1 BellSouth shall make available Dark Fiber where it exists in BellSouth's network and where, as a result of future building or deployment, it becomes available. If BellSouth has plans to use the fiber within a two-year period, there is no requirement to provide said fiber to API.

6.6.3.2 If the requested dark fiber has any lightwave repeater equipment interspliced to it, BellSouth will remove such equipment at API's request subject to time and materials charges.

6.6.3.3 API may test the quality of the Dark Fiber to confirm its usability and performance specifications.

6.6.3.4 BellSouth shall use its best efforts to provide to API information regarding the location, availability and performance of Dark Fiber within ten (10) business days for a records based answer and twenty (20) business days for a field based answer, after receiving a request from API ("Request"). Within such time period, BellSouth shall send written confirmation of availability of the Dark Fiber ("Confirmation"). From the time of the Request to one hundred and twenty (120) days after Confirmation, BellSouth shall hold such requested Dark Fiber for API's use and may not allow any other Party to use such media, including BellSouth. If a Dark Fiber firm order is not received within the one hundred and twenty day period, the Dark Fiber will revert to BellSouth's Dark Fiber inventory.

6.6.3.5 BellSouth shall use its best efforts to make Dark Fiber available to API within thirty (30) business days after it receives written confirmation from API that the Dark Fiber previously deemed available by BellSouth is wanted for use by API. This includes identification of appropriate connection points (e.g., Light Guide Interconnection (LGX) or splice points) to enable API to connect or splice API provided transmission media (e.g., optical fiber) or equipment to the Dark Fiber.

6.6.3.6 Dark Fiber shall meet the manufacturer's design specifications.

6.6.3.7 API may splice and test Dark Fiber obtained from BellSouth using API or API designated personnel. BellSouth shall provide appropriate interfaces to allow splicing and testing of Dark Fiber. BellSouth shall provide an excess cable length of 25 feet minimum (for fiber in underground conduit) to allow the uncoiled fiber to reach from the manhole to a splicing van.

6.7 **Rates**

6.7.1 The prices that API shall pay to BellSouth for Network Elements and Other Services are set forth in Exhibit C to this Attachment. If API purchases a

service(s) from a tariff, all terms and conditions and rates as set forth in such tariff shall apply.

.

6.8 **Operational Support Systems (OSS)**

The terms, conditions and rates for OSS are as set forth in Section 2.13 of this Attachment.

7. BellSouth SWA 8XX Toll Free Dialing Ten Digit Screening Service

All of the negotiated rates, terms and conditions set forth in this Section pertain to the provision of 8XX Access Ten Digit Screening Services.

7.1 BellSouth SWA 8XX Toll Free Dialing Ten Digit Screening Service database

7.1.1 The BellSouth SWA 8XX Toll Free Dialing Ten Digit Screening Service database (herein known as 8XX SCP) is a SCP that contains customer record information and functionality to provide call-handling instructions for 8XX calls. The 8XX SCP IN software stores data downloaded from the national SMS and provides the routing instructions in response to queries from the SSP or tandem. The BellSouth SWA 8XX Toll Free Dialing Ten Digit Screening Service (herein know as 8XX TFD), utilizes the 8XX SCP to provide identification and routing of the 8XX calls, based on the ten digits dialed. 8XX TFD is provided with or without POTS number delivery, dialing number delivery, and other optional complex features as selected by API. BellSouth shall provide 8XX TFD in accordance with the following:

7.1.2 <u>Technical Requirements</u>

7.1.2.1 BellSouth shall provide API with access to the 8XX record information located in the 8XX SCP. The 8XX SCP contains current records as received from the national SMS and will provide for routing 8XX originating calls based on the dialed ten digit 8XX number.

7.1.2.2 The 8XX SCP is designated to receive and respond to queries using the American National Standard Specification of Signaling System Seven (SS7) protocol. The 8XX SCP shall determine the carrier identification based on all ten digits of the dialed number and route calls to the carrier, POTS number, dialing number and/or other optional feature selected by API.

7.1.2.3 The SCP shall also provide, at API's option, such additional feature as described in SR-TSV-002275 (BOC Notes on BellSouth Networks, SR-TSV-002275, Issue 2, (Telcordia (formerly BellCore), April 1994)) as are available to BellSouth. These may include but are not limited to:

7.1.2.3.1 Network Management;

7.1.2.3.2 Customer Sample Collection; and

7.1.2.3.3 Service Maintenance.

7.2 **Rates**

The prices that API shall pay to BellSouth for Network Elements and Other Services are set forth in Exhibit C to this Attachment. . If API purchases a service(s) from a tariff, all terms and conditions and rates as set forth in such tariff shall apply.

7.3 **Operational Support Systems (OSS)**

The terms, conditions and rates for OSS are as set forth in Section 2.13 of this Attachment.

8 Line Information Database (LIDB)

8.1 All of the negotiated rates, terms and conditions set forth in this Section pertain to the provision of LIDB.

8.2 BellSouth will store in its LIDB only records relating to service in the BellSouth region. The LIDB Storage Agreement is included in this Attachment.

8.2.1 Definition

8.2.2 The Line Information Database (LIDB) is a transaction-oriented database accessible through Common Channel Signaling (CCS) networks. It contains records associated with end user Line Numbers and Special Billing Numbers. LIDB accepts queries from other Network Elements and provides appropriate responses. The query originator need not be the owner of LIDB data. LIDB queries include functions such as screening billed numbers that provides the ability to accept Collect or Third Number Billing calls and validation of Telephone Line Number based non-proprietary calling cards. The interface for the LIDB functionality is the interface between BellSouth's CCS network and other CCS networks. LIDB also interfaces to administrative systems.

8.2.3 Technical Requirements

8.2.4 BellSouth will offer to API any additional capabilities that are developed for LIDB during the life of this Agreement.

8.2.4.1 BellSouth shall process API's Customer records in LIDB at least at parity with BellSouth customer records, with respect to other LIDB functions. BellSouth shall indicate to API what additional functions (if any) are performed by LIDB in the BellSouth network.

8.2.4.2 Within two (2) weeks after a request by API, BellSouth shall provide API with a list of the customer data items, which API would have to provide in order to support each required LIDB function. The list shall indicate which data items are essential to LIDB function, and which are required only to support certain services. For each data item, the list shall show the data formats, the acceptable values of the data item and the meaning of those values.

8.2.4.3 BellSouth shall provide LIDB systems for which operating deficiencies that would result in calls being blocked shall not exceed 30 minutes per year.

8.2.4.4 BellSouth shall provide LIDB systems for which operating deficiencies that would not result in calls being blocked shall not exceed 12 hours per year.

8.2.4.5 BellSouth shall provide LIDB systems for which the LIDB function shall be in overload no more than 12 hours per year.

8.2.4.6 All additions, updates and deletions of API data to the LIDB shall be solely at the direction of API. Such direction from API will not be required where the addition, update or deletion is necessary to perform standard fraud control measures (e.g., calling card auto-deactivation).

8.2.4.7 BellSouth shall provide priority updates to LIDB for API data upon API's request (e.g., to support fraud detection)**,** via password-protected telephone card, facsimile, or electronic mail within one hour of notice from the established BellSouth contact.

8.2.4.8 BellSouth shall provide LIDB systems such that no more than 0.01% of API customer records will be missing from LIDB, as measured by API audits. BellSouth will audit API records in LIDB against DBAS to identify record mismatches and provide this data to a designated API contact person to resolve the status of the records and BellSouth will update system appropriately. BellSouth will refer record of mis-matches to API within one business day of audit. Once reconciled records are received back from API, BellSouth will update LIDB the same business day if less than 500 records are received before 1:00PM Central Time. If more than 500 records are received, BellSouth will contact API to negotiate a time frame for the updates, not to exceed three business days.

8.2.4.9 BellSouth shall perform backup and recovery of all of API's data in LIDB including sending to LIDB all changes made since the date of the most recent backup copy, in at least the same time frame BellSouth performs backup and recovery of BellSouth data in LIDB for itself. Currently, BellSouth performs backups of the LIDB for itself on a weekly basis and when a new software release is scheduled, a backup is performed prior to loading the new release.

8.2.4.10 BellSouth shall provide API with LIDB reports of data, which are missing or contain errors, as well as any misrouted errors, within a reasonable time period as negotiated between API and BellSouth.

8.2.4.11 BellSouth shall prevent any access to or use of API data in LIDB by BellSouth personnel that are outside of established administrative and fraud control personnel, or by any other Party that is not authorized by API in writing.

8.2.4.12 BellSouth shall provide API performance of the LIDB Data Screening function, which allows a LIDB to completely or partially deny specific query originators access to LIDB data owned by specific data owners, for Customer Data that is part of an NPA-NXX or RAO-0/1XX wholly or partially owned by API at least at parity with BellSouth Customer Data. BellSouth shall obtain from API the screening information associated with LIDB Data Screening of API data in accordance with this requirement. BellSouth currently does not have LIDB Data Screening capabilities. When such capability is available, BellSouth shall offer it to API under the BFR/NBR as set forth in General Terms and Conditions.

8.2.4.13 BellSouth shall accept queries to LIDB associated with API customer records, and shall return responses in accordance with industry standards.

8.2.4.14 BellSouth shall provide mean processing time at the LIDB within 0.50 seconds under normal conditions as defined in industry standards.

8.2.4.15 BellSouth shall provide processing time at the LIDB within 1 second for 99% of all messages under normal conditions as defined in industry standards.

8.2.5 <u>Interface Requirements</u>

8.2.6 BellSouth shall offer LIDB in accordance with the requirements of this subsection.

8.2.6.1 The interface to LIDB shall be in accordance with the technical references contained within.

8.2.6.2 The CCS interface to LIDB shall be the standard interface described herein.

8.2.6.3 The LIDB Data Base interpretation of the ANSI-TCAP messages shall comply with the technical reference herein. Global Title Translation shall be maintained in the signaling network in order to support signaling network routing to the LIDB.

8.3 **Rates**

The prices that API shall pay to BellSouth for Network Elements and Other Services are set forth in Exhibit C to this Attachment. If API purchases a service(s) from a tariff, all terms and conditions and rates as set forth in such tariff shall apply.

8.4 **Operational Support Systems (OSS)**

The terms, conditions and rates for OSS are as set forth in Section 2.13 of this Attachment.

9. Signaling

9.1 All of the negotiated rates, terms and conditions set forth in this Section pertain to the provision of Signaling Transport Services.

9.2 BellSouth agrees to offer access to signaling and access to BellSouth's signaling databases subject to compatibility testing and at the rates set forth in this Attachment. BellSouth may provide mediated access to BellSouth signaling systems and databases. Available signaling elements include signaling links, signal transfer points and service control points. Signaling functionality will be available with both A-link and B-link connectivity.

9.3 **Signaling Link Transport**

9.3.1 Definition Signaling Link Transport is a set of two or four dedicated 56 Kbps. transmission paths between CLEC-designated Signaling Points of Interconnection (SPOI) that provides appropriate physical diversity.

9.3.2 Technical Requirements

9.3.2.1 Signaling Link Transport shall consist of full duplex mode 56 kbps transmission paths.

9.3.3 Of the various options available, Signaling Link Transport shall perform in the following two ways:

9.3.3.1 As an "A-link" which is a connection between a switch or SCP and a home Signaling Transfer Point Switch (STP) pair; and

9.3.3.2 As a "B-link" which is a connection between two STP pairs in different company networks (e.g., between two STP pairs for two Competitive Local Exchange Carriers (CLECs)).

9.3.4 Signaling Link Transport shall consist of two or more signaling link layers as follows:

9.3.4.1 An A-link layer shall consist of two links.

9.3.4.2 A B-link layer shall consist of four links.

9.3.5 A signaling link layer shall satisfy a performance objective such that:

9.3.5.1 There shall be no more than two minutes down time per year for an A-link layer; and

9.3.5.2 There shall be negligible (less than 2 seconds) down time per year for a B-link layer.

9.3.5.3 A signaling link layer shall satisfy interoffice and intraoffice diversity of facilities and equipment, such that:

9.3.5.3.1 No single failure of facilities or equipment causes the failure of both links in an A-link layer (i.e., the links should be provided on a minimum of two separate physical paths end-to-end); and

9.3.5.3.2 No two concurrent failures of facilities or equipment shall cause the failure of all four links in a B-link layer (i.e., the links should be provided on a minimum of three separate physical paths end-to-end).

9.3.5.4 Interface Requirements

9.3.5.4.1 There shall be a DS1 (1.544 Mbps) interface at the API designated SPOIs. Each 56 kbps transmission path shall appear as a DS0 channel within the DS1 interface.

9.4 **Signaling Transfer Points (STPs)**

9.4.1 Definition - Signaling Transfer Points is a signaling network function that includes all of the capabilities provided by the signaling transfer point switches (STPs) and their associated signaling links which enable the exchange of SS7 messages among and between switching elements, database elements and signaling transfer point switches.

9.4.2 Technical Requirements

9.4.2.1 STPs shall provide access to Network Elements connected to BellSouth SS7 network. These include:

9.4.2.1.1 BellSouth Local Switching or Tandem Switching;

9.4.2.1.2 BellSouth Service Control Points/DataBases;

9.4.2.1.3 Third-party local or tandem switching;

9.4.2.1.4 Third-party-provided STPs.

9.4.2.2 The connectivity provided by STPs shall fully support the functions of all other Network Elements connected to the BellSouth SS7 network. This explicitly includes the use of the BellSouth SS7 network to convey messages which neither originate nor terminate at a signaling end point directly connected to the BellSouth SS7 network (i.e., transient messages). When the BellSouth SS7

network is used to convey transient messages, there shall be no alteration of the Integrated Services Digital Network User Part (ISDNUP) or Transaction Capabilities Application Part (TCAP) user data that constitutes the content of the message.

9.4.2.3 If a BellSouth tandem switch routes calling traffic, based on dialed or translated digits, on SS7 trunks between a API local switch and third party local switch, the BellSouth SS7 network shall convey the TCAP messages that are necessary to provide Call Management features (Automatic Callback, Automatic Recall, and Screening List Editing) between API local STPs and the STPs that provide connectivity with the third party local switch, even if the third party local switch is not directly connected to BellSouth STPs.

9.4.2.4 STPs shall provide all functions of the MTP as defined in the applicable industry standard technical references.

9.4.2.5 STPs shall provide all functions of the SCCP necessary for Class 0 (basic connectionless) service, as defined in Telcordia (formerly BellCore) ANSI Interconnection Requirements. In particular, this includes Global Title Translation (GTT) and SCCP Management procedures, as specified in T1.112.4. In cases where the destination signaling point is a API or third party local or tandem switching system directly connected to BellSouth SS7 network, BellSouth shall perform final GTT of messages to the destination and SCCP Subsystem Management of the destination. In all other cases, BellSouth shall perform intermediate GTT of messages to a gateway pair of STPs in an SS7 network connected with BellSouth SS7 network, and shall not perform SCCP Subsystem Management of the destination. If BellSouth performs final GTT to a API database, then API agrees to provide BellSouth with the Destination Point Code for the API database.

9.4.2.6 STPs shall provide on a non-discriminatory basis all functions of the OMAP commonly provided by STPs, as specified in the reference in Section 12 of this Attachment. All OMAP functions will be on a "where available" basis and can include:

9.4.2.6.1 MTP Routing Verification Test (MRVT); and

9.4.2.6.2 SCCP Routing Verification Test (SRVT).

9.4.2.7 In cases where the destination signaling point is a BellSouth local or tandem switching system or database, or is a API or third party local or tandem switching system directly connected to the BellSouth SS7 network, STPs shall perform MRVT and SRVT to the destination signaling point. In all other cases, STPs shall perform MRVT and SRVT to a gateway pair of STPs in an SS7 network connected with the BellSouth SS7 network. This requirement shall be superseded by the specifications for Internetwork MRVT and SRVT if and when these

become approved ANSI standards and available capabilities of BellSouth STPs, and if mutually agreed upon by API and BellSouth.

9.4.2.8 STPs shall be on parity with BellSouth.

9.4.2.9 SS7 Advanced Intelligent Network (AIN) Access

9.4.2.9.1 When technically feasible and upon request by API, SS7 Access shall be made available in association with switching. SS7 AIN Access is the provisioning of AIN 0.1 triggers in an equipped BellSouth local switch and interconnection of the BellSouth SS7 network with the API SS7 network to exchange TCAP queries and responses with a API SCP.

9.4.2.9.2 SS7 AIN Access shall provide API SCP access to BellSouth local switch in association with switching via interconnection of BellSouth SS7 and API SS7 Networks. BellSouth shall offer SS7 access through its STPs. If BellSouth requires a mediation device on any part of its network specific to this form of access, BellSouth must route its messages in the same manner. The interconnection arrangement shall result in the BellSouth local switch recognizing the API SCP as at least at parity with BellSouth's SCP's in terms of interfaces, performance and capabilities.

9.4.3 Interface Requirements

9.4.3.1 BellSouth shall provide the following STPs options to connect API or API-designated local switching systems or STPs to the BellSouth SS7 network:

9.4.3.1.1 An A-link interface from API local switching systems; and,

9.4.3.1.2 A B-link interface from API local STPs.

9.4.3.2 Each type of interface shall be provided by one or more sets (layers) of signaling links.

9.4.3.3 The Signaling Point of Interconnection (SPOI) for each link shall be located at a cross-connect element, such as a DSX-1, in the Central Office (CO) where BellSouth STP is located. There shall be a DS1 or higher rate transport interface at each of the SPOIs. Each signaling link shall appear as a DS0 channel within the DS1 or higher rate interface. BellSouth shall offer higher rate DS1 signaling for interconnecting API local switching systems or STPs with BellSouth STPs as soon as these become approved ANSI standards and available capabilities of BellSouth STPs. BellSouth and API will work jointly to establish mutually acceptable SPOIs.

9.4.3.4 BellSouth CO shall provide intraoffice diversity between the SPOIs and BellSouth STPs, so that no single failure of intraoffice facilities or equipment shall cause the

failure of both B-links in a layer connecting to a BellSouth STP. BellSouth and API will work jointly to establish mutually acceptable SPOIs.

9.4.3.5 STPs shall provide all functions of the MTP as defined in the applicable industry standard technical references.

9.4.3.6 Message Screening

9.4.3.6.1 BellSouth shall set message screening parameters so as to accept valid messages from API local or tandem switching systems destined to any signaling point within BellSouth's SS7 network where the API switching system has a legitimate signaling relation.

9.4.3.6.2 BellSouth shall set message screening parameters so as to pass valid messages from API local or tandem switching systems destined to any signaling point or network accessed through BellSouth's SS7 network where the API switching system has a legitimate signaling relation.

9.4.3.6.3 BellSouth shall set message screening parameters so as to accept and pass/send valid messages destined to and from API from any signaling point or network interconnected through BellSouth's SS7 network where the API SCP has a legitimate signaling relation.

9.4.4 STPs shall be equal to or better than all of the requirements for STPs set forth in the applicable industry standard technical references.

9.5 **Service Control Points/Databases**

9.5.1 Definition

9.5.1.1 Databases are the Network Elements that provide the functionality for storage of, access to, and manipulation of information required to offer a particular service and/or capability. Databases include, but are not limited to: Local Number Portability, LIDB, Toll Free Number Database, Automatic Location Identification/Data Management System, Calling Name Database, access to Service Creation Environment and Service Management System (SCE/SMS) application databases and Directory Assistance.

9.5.2 A Service Control Point (SCP) is a specific type of Database functionality deployed in a Signaling System 7 (SS7) network that executes service application logic in response to SS7 queries sent to it by a switching system also connected to the SS7 network. Service Management Systems provide operational interfaces to allow for provisioning, administration and maintenance of subscriber data and service application data stored in SCPs.

9.5.3 Technical Requirements for SCPs/Databases

9.5.3.1 Requirements for SCPs/Databases within this section address storage of information, access to information (e.g. signaling protocols, response times), and administration of information (e.g., provisioning, administration, and maintenance). All SCPs/Databases shall be provided to API in accordance with the following requirements.

9.5.3.2 BellSouth shall provide physical access to SCPs through the SS7 network and protocols with TCAP as the application layer protocol.

9.5.3.3 BellSouth shall provide physical interconnection to databases via industry standard interfaces and protocols (e.g. SS7, ISDN and X.25).

9.5.3.4 The reliability of interconnection options shall be consistent with requirements for diversity and survivability.

9.5.4 Database Availability

9.5.4.1 Call processing databases shall have a maximum unscheduled unavailability of 30 minutes per year. Unavailability due to software and hardware upgrades shall be scheduled during minimal usage periods and only be undertaken upon proper notification to providers, which might be impacted. Any downtime associated with the provision of call processing related databases will impact all service providers, including BellSouth, equally.

9.5.4.2 The operational interface provided by BellSouth shall complete Database transactions (i.e., add, modify, delete) for API customer records stored in BellSouth databases within 3 days, or sooner where BellSouth provisions its own customer records within a shorter interval.

9.6 **Local Number Portability Database**

9.6.1 Definition

9.6.2 The Permanent Number Portability (PNP) database supplies routing numbers for calls involving numbers that have been ported from one local service provider to another. PNP is currently being worked in industry forums. The results of these forums will dictate the industry direction of PNP. BellSouth agrees to provide access to the PNP database at rates, terms and conditions as set forth by BellSouth and in accordance with an effective FCC or Commission directive.

9.7 **SS7 Network Interconnection**

9.7.1 Definition.

9.7.2 SS7 Network Interconnection is the interconnection of API local Signaling Transfer Point Switches (STP) and API local or tandem switching systems with BellSouth STPs. This interconnection provides connectivity that enables the

exchange of SS7 messages among BellSouth switching systems and databases (DBs), API local or tandem switching systems, and other third-party switching systems directly connected to the BellSouth SS7 network.

9.7.3 Technical Requirements

9.7.3.1 SS7 Network Interconnection shall provide connectivity to all components of the BellSouth SS7 network. These include:

9.7.3.1.1 BellSouth local or tandem switching systems;

9.7.3.1.2 BellSouth DBs; and

9.7.3.1.3 Other third-party local or tandem switching systems.

9.7.4 The connectivity provided by SS7 Network Interconnection shall fully support the functions of BellSouth switching systems and DBs and API or other third-party switching systems with A-link access to the BellSouth SS7 network.

9.7.5 If traffic is routed based on dialed or translated digits between a API local switching system and a BellSouth or other third-party local switching system, either directly or via a BellSouth tandem switching system, then it is a requirement that the BellSouth SS7 network convey via SS7 Network Interconnection the TCAP messages that are necessary to provide Call Management services (Automatic Callback, Automatic Recall, and Screening List Editing) between the API local STPs and BellSouth or other third-party local switch.

9.7.6 When the capability to route messages based on Intermediate Signaling Network Identifier (ISNI) is generally available on BellSouth STPs, the BellSouth SS7 Network shall also convey TCAP messages using SS7 Network Interconnection in similar circumstances where the BellSouth switch routes traffic based on a Carrier Identification Code (CIC).

9.7.7 SS7 Network Interconnection shall provide all functions of the MTP as specified in ANSI T1.111. This includes:

9.7.7.1 Signaling Data Link functions, as specified in ANSI T1.111.2;

9.7.7.2 Signaling Link functions, as specified in ANSI T1.111.3; and

9.7.7.3 Signaling Network Management functions, as specified in ANSI T1.111.4.

9.7.8 SS7 Network Interconnection shall provide all functions of the SCCP necessary for Class 0 (basic connectionless) service, as specified in ANSI T1.112. In particular, this includes Global Title Translation (GTT) and SCCP Management procedures, as specified in T1.112.4. Where the destination signaling point is a

BellSouth switching system or DB, or is another third-party local or tandem switching system directly connected to the BellSouth SS7 network, SS7 Network Interconnection shall include final GTT of messages to the destination and SCCP Subsystem Management of the destination. Where the destination signaling point is a API local or tandem switching system, SS7 Network Interconnection shall include intermediate GTT of messages to a gateway pair of API local STPs, and shall not include SCCP Subsystem Management of the destination.

9.7.9 SS7 Network Interconnection shall provide all functions of the Integrated Services Digital Network User Part (ISDNUP), as specified in ANSI T1.113.

9.7.10 SS7 Network Interconnection shall provide all functions of the TCAP, as specified in ANSI T1.114.

9.7.11 If and when Internetwork MTP Routing Verification Test (MRVT) and SCCP Routing Verification Test (SRVT) become approved ANSI standards and available capabilities of BellSouth STPs, SS7 Network Interconnection shall provide these functions of the OMAP.

9.7.12 SS7 Network Interconnection shall be equal to or better than the following performance requirements:

9.7.12.1 MTP Performance, as specified in ANSI T1.111.6;

9.7.12.2 SCCP Performance, as specified in ANSI T1.112.5; and

9.7.12.3 ISDNUP Performance, as specified in ANSI T1.113.5.

9.7.13 <u>Interface Requirements</u>

9.7.13.1 BellSouth shall offer the following SS7 Network Interconnection options to connect API or API-designated local or tandem switching systems or STPs to the BellSouth SS7 network:

9.7.13.1.1 A-link interface from API local or tandem switching systems; and

9.7.13.1.2 B-link interface from API STPs.

9.7.13.2 The Signaling Point of Interconnection (SPOI) for each link shall be located at a cross-connect element, such as a DSX-1, in the Central Office (CO) where the BellSouth STP is located. There shall be a DS1 or higher rate transport interface at each of the SPOIs. Each signaling link shall appear as a DS0 channel within the DS1 or higher rate interface. BellSouth shall offer higher rate DS1 signaling links for interconnecting API local switching systems or STPs with BellSouth STPs as soon as these become approved ANSI standards and available capabilities of BellSouth STPs. BellSouth and API will work jointly to establish mutually acceptable SPOI.

9.7.13.3 BellSouth CO shall provide intraoffice diversity between the SPOIs and the BellSouth STP, so that no single failure of intraoffice facilities or equipment shall cause the failure of both B-links in a layer connecting to a BellSouth STP. BellSouth and API will work jointly to establish mutually acceptable SPOI.

9.7.13.4 The protocol interface requirements for SS7 Network Interconnection include the MTP, ISDNUP, SCCP, and TCAP. These protocol interfaces shall conform to the applicable industry standard technical references.

9.7.13.5 BellSouth shall set message screening parameters to accept messages from API local or tandem switching systems destined to any signaling point in the BellSouth SS7 network with which the API switching system has a legitimate signaling relation.

9.7.13.6 SS7 Network Interconnection shall be equal to or better than all of the requirements for SS7 Network Interconnection set forth in the applicable industry standard technical references.

9.8 **Rates**

The prices that API shall pay to BellSouth for Network Elements and Other Services are set forth in Exhibit C to this Attachment. If API purchases a service(s) from a tariff, all terms and conditions and rates as set forth in such tariff shall apply.

9.9 Operational Support Systems (OSS)

The terms, conditions and rates for OSS are as set forth in Section 2.13 of this Attachment.

10. Operator Call Processing, Inward Operator Services and Directory Assistance Services

10.1 All of the negotiated rates, terms and conditions set forth in this Section pertain to the provision of Operator Call Processing, Inward Operator Services and Directory Assistance Services.

10.2 **Operator Systems**

10.2.1 Definition. Operator Systems is the Network Element that provides operator and automated call handling and billing, special services, end user telephone listings and optional call completion services. The Operator Systems, Network Element provides two types of functions: Operator Service functions and Directory Assistance Service functions, each of which are described in detail below.

10.3 **Operator Service**

10.3.1 Definition. Operator Service provides: (1) operator handling for call completion (for example, collect, third number billing, and manual credit card calls), (2) operator or automated assistance for billing after the end user has dialed the called number (for example, credit card calls); and (3) special services including but not limited to Busy Line Verification and Emergency Line Interrupt (ELI), Emergency Agency Call, Operator-assisted Directory Assistance, and Rate Quotes.

10.3.2 Requirements

10.3.2.1 When API requests BellSouth to provide Operator Services, the following requirements apply:

10.3.2.1.1 BellSouth shall complete 0+ and 0- dialed local calls.

10.3.2.1.2 BellSouth shall complete 0+ intraLATA toll calls.

10.3.2.1.3 BellSouth shall process calls that are billed to API end user's calling card that can be validated by BellSouth.

10.3.2.1.4 BellSouth shall complete person-to-person calls.

10.3.2.1.5 BellSouth shall complete collect calls.

10.3.2.1.6 BellSouth shall provide the capability for callers to bill to a third party and complete such calls.

10.3.2.1.7 BellSouth shall complete station-to-station calls.

10.3.2.1.8 BellSouth shall process emergency calls.

10.3.2.1.9 BellSouth shall process Busy Line Verify and Emergency Line Interrupt requests.

10.3.2.1.10 BellSouth shall process emergency call trace, as it does for its own end users prior to the Effective Date. Call must originate from a 911 provider.

10.3.2.1.11 BellSouth shall process operator-assisted directory assistance calls.

10.3.2.1.12 BellSouth shall adhere to equal access requirements**,** providing API local end users the same IXC access as provided to BellSouth end users.

10.3.2.1.13 BellSouth shall exercise at least the same level of fraud control in providing Operator Service to API that BellSouth provides for its own operator service.

10.3.2.1.14 BellSouth shall perform Billed Number Screening when handling Collect, Person-to-Person, and Billed-to-Third-Party calls.

10.3.2.1.15 BellSouth shall direct customer account and other similar inquiries to the customer service center designated by API.

10.3.2.1.16 BellSouth shall provide a feed of customer call records in "EMI" format to API in accordance with CLEC ODUF standards specified in Attachment 7.

10.3.3 Interface Requirements

10.3.3.1 With respect to Operator Services for calls that originate on local switching capability provided by or on behalf of API, the interface requirements shall conform to the then current established system interface specifications for the platform used to provide Operator Service and the interface shall conform to industry standards.

10.4 **Directory Assistance Service**

10.4.1 Definition. Directory Assistance Service provides local end user telephone number listings with the option to complete the call at the caller's direction separate and distinct from local switching.

10.4.2 Requirements

10.4.3 Directory Assistance Service shall provide up to two listing requests per call. If available and if requested by API's end user, BellSouth shall provide caller-optional directory assistance call completion service at rates contained in this Attachment to one of the provided listings, equal to that which BellSouth provides its end users. If not available, API may request such requirement pursuant to the BFR/NBR Process as set forth in General Terms and Conditions.

10.4.4 Directory Assistance Service Updates

10.4.4.1 BellSouth shall update end user listings changes daily. These changes include:

10.4.4.1.1 New end user connections: BellSouth will provide service to API that is equal to the service it provides to itself and its end users;

10.4.4.1.2 End user disconnections: BellSouth will provide service to API that is equal to the service it provides to itself and its end users; and

10.4.4.1.3 End user address changes: BellSouth will provide service to API that is equal to the service it provides to itself and its end users;

10.4.4.1.4 These updates shall also be provided for non-listed and non-published numbers for use in emergencies.

10.4.5 Branding for Operator Call Processing and Directory Assistance

10.4.5.1 The BellSouth Operator Systems Branding Feature provides a definable announcement to API end users using Directory Assistance (DA)/Operator Call Processing (OCP) prior to placing them in queue or connecting them to an

available operator or automated operator system. This feature allows API to have its calls custom branded with API's name on whose behalf BellSouth is providing Directory Assistance and/or Operator Call Processing. Rates for Custom Branding, Operator Call Process and Directory Assistance are set forth in this Attachment.

10.4.5.2 BellSouth offers four service levels of branding to API when ordering Directory Assistance and/or Operator Call Processing.

10.4.5.2.1 Service Level 1 - BellSouth Branding

10.4.5.2.2 Service Level 2 - Unbranded

10.4.5.2.3 Service Level 3 - Custom Branding

10.4.5.2.4 Service Level 4 - Self Branding (applicable only to API for Resale or use with an Unbundled Port when routing to an operator service provider other than BellSouth).

10.4.6 <u>For Resellers and Use with an Unbundled Port</u>

10.4.6.1 BellSouth Branding is the Default Service Level.

10.4.6.2 Unbranding, Custom Branding, and Self Branding require API to order selective routing for each originating BellSouth end office identified by API. Rates for Selective Routing are set forth in this Attachment.

10.4.6.3 Custom Branding and Self Branding require API to order dedicated trunking from each BellSouth end office identified by API, to either the BellSouth Traffic Operator Position System (TOPS) or API Operator Service Provider. Rates for trunks are set forth in applicable BellSouth tariffs.

10.4.6.4 Unbranding - Unbranded Directory Assistance and/or Operator Call Processing calls ride common trunk groups provisioned by BellSouth from those end offices identified by API to the BellSouth TOPS. These calls are routed to "No Announcement."

10.4.7 For Facilities Based Carriers

10.4.7.1 All Service Levels require API to order dedicated trunking from their end office(s) point of interface to the BellSouth TOPS Switches. Rates for trunks are set forth in applicable BellSouth tariffs.

10.4.7.2 Customized Branding includes charges for the recording of the branding announcement and the loading of the audio units in each TOPS Switch, Interactive Voice Subsystem (IVS) and Network Applications Vehicle (NAV) equipment for which API requires service.

10.4.8 Directory Assistance customized branding uses:

10.4.8.1 the recording of the name;

10.4.8.2 the front-end loading of the Digital Recorded Announcement Machine (DRAM) in each TOPS switch.

10.4.9 Operator Call Processing customized branding uses:

10.4.9.1 the recording of the name;

10.4.9.2 the front-end loading of the DRAM in the TOPS Switch;

10.4.9.3 the back-end loading in the audio units in the Automated Alternate Billing System (AABS) in the Interactive Voice Subsystem (IVS);

10.4.9.4 the 0- automation loading for the audio units in the Enhanced Billing and Access Service (EBAS) in the Network Applications Vehicle (NAV).

10.4.9.5 BellSouth will provide to API purchasing local BellSouth switching and reselling BellSouth local exchange service, selective routing of calls to a requested directory assistance services platform or operator services platform. API end users may use the same dialing arrangements as BellSouth end users, but obtain a API branded service.

10.5 **Directory Assistance Database Service (DADS)**

10.5.1 BellSouth shall make its Directory Assistance Database Service (DADS) available solely for the expressed purpose of providing Directory Assistance type services to API end users. The term “end user” denotes any entity which obtains Directory Assistance type services for its own use from a DADS customer. Directory Assistance type service is defined as Voice Directory Assistance (DA Operator assisted and Electronic Directory Assistance (Data System assisted)). API agrees that DADS will not be used for any purpose which violates federal or state laws, statutes, regulatory orders or tariffs. Except for the permitted users, API agrees not to disclose DADS to others and shall provide due care in providing for the security and confidentiality of DADS. Further, API authorizes the inclusion of API Directory Assistance listings in the BellSouth Directory Assistance products.

10.5.2 BellSouth shall provide API initially with a base file of subscriber listings which reflect all listing change activity occurring since API’s most recent update via magnetic tape, and subsequently using electronic connectivity such as Network Data Mover to be developed mutually by API and BellSouth. API agrees to assume the costs associated with CONNECT: Direct ™ connectivity, which will vary depending upon volume and mileage.

10.5.3 BellSouth will require approximately one month after receiving an order to prepare the Base File. BellSouth will provide daily updates which will reflect all listing change activity occurring since CLEC's most recent update. BellSouth shall provide updates to API on a Business, Residence, or combined Business and Residence basis. API agrees that the updates shall be used solely to keep the information current. Delivery of Daily Updates will commence the day after API receives the Base File.

10.5.4 BellSouth is authorized to include API Directory Assistance Listing Information in its DADS. Any other use by BellSouth of API Directory Assistance Listing Information is not authorized and with the exception of a request for DADS, BellSouth shall refer any request for such information to API.

10.5.5 Rates for DADS are as set forth in this Attachment.

10.6 **Direct Access to Directory Assistance Service**

10.6.1 Direct Access to Directory Assistance Service (DADAS) will provide API's directory assistance operators with the ability to search all available BellSouth subscriber listings using the Directory Assistance search format. Subscription to DADAS will allow API to utilize its own switch, operator workstations and optional audio subsystems.

10.6.2 Rates, terms and conditions for provisioning DADAS are as set forth in the FCC tariff No. 1.

10.7 **Automatic Location Identification/Data Management System (ALI/DMS)**

10.7.1 The ALI/DMS Database contains end user information (including name, address, telephone information, and sometimes special information from the local service provider or end user) used to determine to which Public Safety Answering Point (PSAP) to route the call. The ALI/DMS database is used to provide more routing flexibility for E911 calls than Basic 911. BellSouth shall provide the Emergency Services Database in accordance with the following:

10.7.2 <u>Technical Requirements</u>

10.7.2.1 BellSouth shall offer API a data link to the ALI/DMS database or permit API to provide its own data link to the ALI/DMS database. BellSouth shall provide error reports from the ALI/DMS database to API immediately after API inputs information into the ALI/DMS database. Alternately, API may utilize BellSouth, to enter end user information into the database on a demand basis, and validate end user information on a demand basis.

10.7.2.2 The ALI/DMS database shall contain the following end user information:

10.7.2.2.1 Name;

10.7.2.2.2 Address;

10.7.2.2.3 Telephone number; and

10.7.2.2.4 Other information as appropriate (e.g., whether an end user is blind or deaf or has another disability).

10.7.2.3 When BellSouth is responsible for administering the ALI/DMS database in its entirety, ported number NXXs entries for the ported numbers should be maintained unless API requests otherwise and shall be updated if API requests, provided API supplies BellSouth with the updates.

10.7.2.4 When Remote Call Forwarding (RCF) is used to provide number portability to the local end user and a remark or other appropriate field information is available in the database, the shadow or "forwarded-to" number and an indication that the number is ported shall be added to the customer record.

10.7.2.5 If BellSouth is responsible for configuring PSAP features (for cases when the PSAP or BellSouth supports an ISDN interface) it shall ensure that CLASS Automatic Recall (Call Return) is not used to call back to the ported number. Although BellSouth currently does not have ISDN interface, BellSouth agrees to comply with this requirement once ISDN interfaces are in place.

10.7.3 Interface Requirements

The interface between the E911 Switch or Tandem and the ALI/DMS database for API end users shall meet industry standards.

10.8 **Rates**

The prices that API shall pay to BellSouth for Network Elements and Other Services are set forth in Exhibit C to this Attachment. If API purchases a service(s) from a tariff, all terms and conditions and rates as set forth in such tariff shall apply.

10.9 Operational Support Systems (OSS)

The terms, conditions and rates for OSS are as set forth in Section 2.13 of this Attachment.

11. Calling Name (CNAM) Database Service

11.1 All of the negotiated rates, terms and conditions set forth in this Section pertain to the provision of CNAM.

11.2 The Agreement for CNAM with standard pricing is included as Exhibit B to this Attachment. API must provide to its account manager a written request with a

requested activation date to activate this service. If API is interested in requesting CNAM with volume and term pricing, API must contact its account manager to request a separate CNAM volume and term Agreement.

11.3 SCPs/Databases shall be equal to or better than all of the requirements for SCPs/Databases set forth in the applicable industry standard technical references.

11.4 **Service Creation Environment and Service Management System (SCE/SMS) Advanced Intelligent Network (AIN) Access**

11.4.1 BellSouth's Service Creation Environment and Service Management System (SCE/SMS) Advanced Intelligent Network (AIN) Access shall provide API the capability that will allow API and other third parties to create service applications in a BellSouth SCE and deploy those applications in a BellSouth SMS to a BellSouth SCP. The third party service applications interact with AIN triggers provisioned on a BellSouth SSP.

11.4.2 BellSouth's SCE/SMS AIN Access shall provide access to SCE hardware, software, testing and technical support (e.g., help desk, system administrator) resources available to API. Scheduling procedures shall provide API equivalent priority to these resources.

11.4.2 BellSouth SCP shall partition and protect API service logic and data from unauthorized access, execution or other types of compromise.

11.4.3 When API selects SCE/SMS AIN Access, BellSouth shall provide training, documentation, and technical support to enable API to use BellSouth's SCE/SMS AIN Access to create and administer applications. Training, documentation, and technical support will address use of SCE and SMS access and administrative functions, but will not include support for the creation of a specific service application.

11.4.4 When API selects SCE/SMS AIN Access, BellSouth shall provide for a secure, controlled access environment in association with its internal use of AIN components. API access will be provided via remote data connection (e.g., dial-in, ISDN).

11.4.5 When API selects SCE/SMS AIN Access, BellSouth shall allow API to download data forms and/or tables to BellSouth SCP via BellSouth SMS without intervention from BellSouth (e.g., service customization and end user subscription).

11.5 **Rates**

The prices that API shall pay to BellSouth for Network Elements and Other Services are set forth in Exhibit C to this Attachment. If API purchases a

service(s) from a tariff, all terms and conditions and rates as set forth in such tariff shall apply.

11.6 Operational Support Systems (OSS)

The terms, conditions and rates for OSS are as set forth in Section 2.13 of this Attachment.

12. Basic 911 and E911

12.1 All of the negotiated terms and conditions set forth in this Section pertain to the provision of Basic 911 and E911.

12.2 If API orders network elements and other services, then API is also responsible for providing E911 to its end users. BellSouth agrees to offer access to the 911/E911 network pursuant to the following terms and conditions set forth in this Attachment.

12.3 Definition

12.4 Basic 911 and E911 is an additional requirement that provides a caller access to the applicable emergency service bureau by dialing a 3-digit universal telephone number (911).

12.5 Requirements

12.5.1 Basic 911 Service Provisioning. For Basic 911 service, BellSouth will provide to API a list consisting of each municipality that subscribes to Basic 911 service. The list will also provide, if known, the E911 conversion date for each municipality and, for network routing purposes, a ten-digit directory number representing the appropriate emergency answering position for each municipality subscribing to 911. API will be required to arrange to accept 911 calls from its end users in municipalities that subscribe to Basic 911 service and translate the 911 call to the appropriate 10-digit directory number as stated on the list provided by BellSouth. API will be required to route that call to BellSouth at the appropriate tandem or end office. When a municipality converts to E911 service, API will be required to discontinue the Basic 911 procedures and being using E911 procedures.

12.5.2 E911 Service Provisioning. For E911 service, API will be required to install a minimum of two dedicated trunks originating from the API serving wire center and terminating to the appropriate E911 tandem. The dedicated trunks shall be, at a minimum, DS-0 level trunks configured either as a 2-wire analog interface or as part of a digital (1.544 Mb/s) interface. Either configuration shall use CAMA-type signaling with multifrequency ("MF") pulsing that will deliver automatic number identification ("ANI") with the voice portion of the call. If the user interface is digital, MF pulses, as well as other AC signals, shall be encoded per

the u-255 Law convention. API will be required to provide BellSouth daily updates to the E911 database. API will be required to forward 911 calls to the appropriate E911 tandem, along with ANI, based upon the current E911 end office to tandem homing arrangement as provided by BellSouth. If the E911 tandem trunks are not available, API will be required to route the call to a designated 7-digit local number residing in the appropriate Public Service Answering Point ("PSAP"). This call will be transported over BellSouth's interoffice network and will not carry the ANI of the calling party. API shall be responsible for providing BellSouth with complete and accurate data for submission to the 911/E911 database for the purpose of providing 911/E911 to its end users.

12.5.3 Rates. Charges for 911/E911 service are borne by the municipality purchasing the service. BellSouth will impose no charge on API beyond applicable charges for BellSouth trunking arrangements.

12.5.4 Basic 911 and E911 functions provided to API shall be at least at parity with the support and services that BellSouth provides to its end users for such similar functionality.

12.5.5 Detailed Practices and Procedures. The detailed practices and procedures contained in the E911 Local Exchange Carrier Guide For Facility-Based Providers as amended from time to time during the term of this Agreement will determine the appropriate practices and procedures for BellSouth and API to follow in providing 911/E911 services.

13. True-Up

This section applies only to Tennessee and other rates that are interim or expressly subject to true-up under this attachment.

13.1 The interim prices for Network Elements and Other Services and Local Interconnection shall be subject to true-up according to the following procedures:

13.2 The interim prices shall be trued-up, either up or down, based on final prices determined either by further agreement between the Parties, or by a final order (including any appeals) of the Commission which final order meets the criteria of (3) below. The Parties shall implement the true-up by comparing the actual volumes and demand for each item, together with interim prices for each item, with the final prices determined for each item. Each Party shall keep its own records upon which the true-up can be based, and any final payment from one Party to the other shall be in an amount agreed upon by the Parties based on such records. In the event of any disagreement as between the records or the Parties regarding the amount of such true-up, the Parties agree that the body having jurisdiction over the matter shall be called upon to resolve such differences, or the Parties may mutually agree to submit the matter to the Dispute Resolution process

in accordance with the provisions of Section 12 of the General Terms and Conditions and Attachment 1 of the Agreement.

13.3 The Parties may continue to negotiate toward final prices, but in the event that no such Agreement is reached within nine (9) months, either Party may petition the Commission to resolve such disputes and to determine final prices for each item. Alternatively, upon mutual agreement, the Parties may submit the matter to the Dispute Resolution Process set forth in Section 12 of the General Terms and Conditions and Attachment 1 of the Agreement, so long as they file the resulting Agreement with the Commission as a "negotiated Agreement" under Section 252(e) of the Act.

(a) 13.4An effective order of the Commission that forms the basis of a true-up shall be based upon cost studies submitted by either or both Parties to the Commission and shall be binding upon BellSouth and API specifically or upon all carriers generally, such as a generic cost proceeding.

EXHIBIT A

LINE INFORMATION DATA BASE (LIDB)

STORAGE AGREEMENT

I. SCOPE

A. This Agreement sets forth the terms and conditions pursuant to which BellSouth agrees to store in its LIDB certain information at the request of API and pursuant to which BellSouth, its LIDB customers and API shall have access to such information. API understands that BellSouth provides access to information in its LIDB to various telecommunications service providers pursuant to applicable tariffs and agrees that information stored at the request of API, pursuant to this Agreement, shall be available to those telecommunications service providers. The terms and conditions contained herein shall hereby be made a part of this Interconnection Agreement upon notice to API's account team to activate this LIDB Storage Agreement. The General Terms and Conditions of the Interconnection/Resale Agreement shall govern this LIDB Storage Agreement. The terms and conditions contained in the attached Addendum is hereby made a part of this LIDB Storage Agreement as if fully incorporated herein.

B. LIDB is accessed for the following purposes:

1.Billed Number Screening

2.Calling Card Validation

3.Fraud Control

C. BellSouth will provide seven days per week, 24-hours per day, fraud monitoring on Calling Cards, bill-to-third and collect calls made to numbers in BellSouth's LIDB, provided that such information is included in the LIDB query. BellSouth will establish fraud alert thresholds and will notify API of fraud alerts so that API may take action it deems appropriate. API understands and agrees BellSouth will administer all data stored in the LIDB, including the data provided by API pursuant to this Agreement, in the same manner as BellSouth's data for BellSouth's end user customers. BellSouth shall not be responsible to API for any lost revenue which may result from BellSouth's administration of the LIDB pursuant to its established practices and procedures as they exist and as they may be changed by BellSouth in its sole discretion from time to time.

API understands that BellSouth currently has in effect numerous billing and collection agreements with various interexchange carriers and billing clearinghouses. API further understands that these billing and collection customers of BellSouth query BellSouth's LIDB to determine whether to accept various billing options from end users. Additionally, API understands that presently BellSouth has no method to differentiate between BellSouth's own billing and line data in the LIDB and such data which it includes in the LIDB on API's behalf pursuant to this Agreement. Therefore, until such time as BellSouth can and does implement in its LIDB and its supporting systems the means to differentiate API's data from BellSouth's data and the Parties to this Agreement execute appropriate amendments hereto, the following terms and conditions shall apply:

(a) API agrees that it will accept responsibility for telecommunications services billed by BellSouth for its billing and collection customers for API's end user accounts which are resident in LIDB pursuant to this Agreement. API authorizes BellSouth to place such charges on API's bill from BellSouth and agrees that it shall pay all such charges. Charges for which API hereby takes responsibility include, but are not limited to, collect and third number calls.

(b) Charges for such services shall appear on a separate BellSouth bill page identified with the name of the entity for which BellSouth is billing the charge.

(c) API shall have the responsibility to render a billing statement to its end users for these charges, but API's obligation to pay BellSouth for the charges billed shall be independent of whether API is able or not to collect from API's end users.

(d) BellSouth shall not become involved in any disputes between API and the entities for which BellSouth performs billing and collection. BellSouth will not issue adjustments for charges billed on behalf of an entity to API. It shall be the responsibility of API and the other entity to negotiate and arrange for any appropriate adjustments.

II. FEES FOR SERVICE AND TAXES

A. API will not be charged a fee for storage services provided by BellSouth to API, as described in Section I of this Agreement.

B. Sales, use and all other taxes (excluding taxes on BellSouth's income) determined by BellSouth or any taxing authority to be due to any federal, state or local taxing jurisdiction with respect to the provision of the service set forth herein will be paid by

API in accordance with the tax provisions set forth in the General Terms and Conditions of this Agreement.

III. MISCELLANEOUS

A. It is understood and agreed to by the Parties that BellSouth may provide similar services to other companies.

B. All terms, conditions and operations under this Agreement shall be performed in accordance with, and subject to, all applicable local, state or federal legal and regulatory tariffs, rulings, and other requirements of the federal courts, the U. S. Department of Justice and state and federal regulatory agencies. Nothing in this Agreement shall be construed to cause either Party to violate any such legal or regulatory requirement and either Party's obligation to perform shall be subject to all such requirements.

C. This LIDB Storage Agreement constitutes the entire Agreement between API and BellSouth with respect to the subject matter hereof and supersedes all prior Agreements or contracts, oral or written representations, statements, negotiations, understandings, proposals and undertakings with respect to LIDB Storage.

FACILITIES BASED ADDENDUM

TO LINE INFORMATION DATA BASE (LIDB)

STORAGE AGREEMENT

This is a Facilities Based Addendum to the Line Information Data Base Storage Agreement dated _____, between BellSouth Telecommunications, Inc. ("BellSouth"), and _____("API"), effective the _____ day of _____, _____.

I. GENERAL

This Addendum sets forth the terms and conditions for API's provision of billing number information to BellSouth for inclusion in BellSouth's LIDB. BellSouth will store in its LIDB the billing number information provided by API, and BellSouth will provide responses to on-line, call-by-call queries to this information for purposes specified in Section I.B. of the Agreement.

II. DEFINITIONS

A. Billing number - a number that API creates for the purpose of identifying an account liable for charges. This number may be a line or a special billing number.

B. Line number - a ten digit number that identifies a telephone line administered by API.

C. Special billing number - a ten-digit number that identifies a billing account established by API.

D. Calling Card number - a billing number plus PIN number.

E. PIN number - a four-digit security code assigned by API which is added to a billing number to compose a fourteen-digit calling card number.

F. Toll billing exception indicator - associated with a billing number to indicate that it is considered invalid for billing of collect calls or third number calls or both, by API.

G. Billed Number Screening - refers to the activity of determining whether a toll billing exception indicator is present for a particular billing number.

H. Calling Card Validation - refers to the activity of determining whether a particular calling card number exists as stated or otherwise provided by a caller.

I. Billing number information - information about billing number, Calling Card number and toll billing exception indicator provided to BellSouth by API.

III. RESPONSIBILITIES OF PARTIES

A. API will provide its billing number information to BellSouth's LIDB each business day by a method that has been mutually agreed upon by both Parties.

B. BellSouth will store in its LIDB the billing number information provided by API. Under normal operating conditions, BellSouth shall include API's billing number information in its LIDB no later than two business days following BellSouth's receipt of such billing number information, provided that BellSouth shall not be held responsible for any delay or failure in performance to the extent such delay or failure is caused by circumstances or conditions beyond BellSouth's reasonable control. BellSouth will store in its LIDB an unlimited volume of API's working telephone numbers.

C. BellSouth will provide responses to on-line, call-by-call queries to the stored information for the specific purposes listed in the next paragraph.

D. BellSouth is authorized to use the billing number information provided by API to perform the following functions for authorized users on an on-line basis:

1. Validate a 14 digit Calling Card number where the first 10 digits are a line number or special billing number assigned by API, and where the last four digits (PIN) are a security code assigned by API.

2. Determine whether API or the subscriber has identified the billing number as one which should not be billed for collect or third number calls, or both.

E. API will provide its own billing number information to BellSouth for storage and to be used for Billed Number Screening and Calling Card Validation. API will arrange and pay for transport of updates to BellSouth.

IV. COMPLIANCE

Unless expressly authorized in writing by API, all billing number information provided pursuant to this Addendum shall be used for no purposes other than those set forth in this Addendum.

EXHIBIT B

CALLING NAME DELIVERY (CNAM) DATABASE SERVICES

1. Definitions

For the purpose of this Attachment, the following terms shall be defined as:

CALLING NAME DELIVERY DATABASE SERVICE (CNAM) - The ability to associate a name with the calling party number, allowing the end user subscriber (to which a call is being terminated) to view the calling party's name before the call is answered. This service also provides API the opportunity to load and store its subscriber names in the BellSouth CNAM SCPs.

CALLING PARTY NUMBER (CPN) - The number of the calling party that is delivered to the terminating switch using common channel signaling system 7 (CCS7) technology, and that is contained in the Initial Address Message (IAM) portion of the CCS7 call setup.

COMMON CHANNEL SIGNALING SYSTEM 7 (CCS7) - A network signaling technology in which all signaling information between two or more nodes is transmitted over high-speed data links, rather than over voice circuits.

SERVICE CONTROL POINTs (SCPs) - The real-time data base systems that contain the names to be provided in response to queries received from CNAM SSPs.

SERVICE MANAGEMENT SYSTEM (SMS) - The main operations support system of CNAM DATABASE SERVICE. CNAM records are loaded into the SMS, which in turn downloads into the CNAM SCP.

SERVICE SWITCHING POINTs (SSPs) - Features of computerized switches in the telephone network that determine that a terminating line has subscribed to CNAM service, and then communicate with CNAM SCPs in order to provide the name associated with the calling party number.

SUBSYSTEM NUMBER (SSN) - The address used in the Signaling Connection Control Part (SCCP) layer of the SS7 protocol to designate an application at an end signaling point. A SSN for CNAM at the end office designates the CNAM application within the end office. BellSouth uses the CNAM SSN of 232.

2. Attachment

2.1 This Attachment contains the terms and conditions where BellSouth will provide to API access to the BellSouth CNAM SCP for query or record storage purposes.

2.2 API shall submit to BellSouth a notice of its intent to access and utilize BellSouth CNAM Database Services pursuant to the terms and conditions of this Attachment. Said notice shall be in writing, no less than 60 days prior to API's access to

BellSouth's CNAM Database Services and shall be addressed to API's Account Manager.

3. Physical Connection and Compensation

3.1 BellSouth's provision of CNAM Database Services to API requires interconnection from API to BellSouth CNAM Service Control Points (SCPs). Such interconnections shall be established pursuant to Attachment 3 of this Agreement. The appropriate charge for access to and use of the BellSouth CNAM Database service shall be as set forth in this Attachment.

3.2 In order to formulate a CNAM query to be sent to the BellSouth CNAM SCP, API shall provide its own CNAM SSP. API's CNAM SSPs must be compliant with TR-NWT-001188, "CLASS Calling Name Delivery Generic Requirements".

3.3 If API elects to access the BellSouth CNAM SCP via a third party CCS7 transport provider, the third party CCS7 provider shall interconnect with the BellSouth CCS7 network according to BellSouth's Common Channel Signaling Interconnection Guidelines and Telcordia (formerly BellCore)'s CCS Network Interface Specification document, TR-TSV-000905. In addition, the third party provider shall establish CCS7 interconnection at the BellSouth Local Signal Transfer Points (LSTPs) serving the BellSouth CNAM SCPs that API desires to query.

3.4 Out-Of-Region Customers

If the customer queries the BellSouth CNAM SCP via a third party national SS7 transport provider, the third party SS7 provider shall interconnect with the BellSouth CCS7 network according to BellSouth's Common Channel Signaling Interconnection Guidelines and Telcordia's (formerly BellCore's) CCS Network Interface Specification document, TR-TSV-000905. In addition, the third party provider shall establish SS7 interconnection at one or more of the BellSouth Gateway Signal Transfer Points (STPs). The payment of all costs associated with the transport of SS7 signals via a third party will be established by mutual agreement of the Parties in writing and shall, by this reference become an integral part of this Agreement.

4. CNAM Record Initial Load and Updates

4.1 The mechanism to be used by API for initial CNAM record load and/or updates shall be determined by mutual agreement. The initial load and all updates shall be provided by API in the BellSouth specified format and shall contain records for every working telephone number that can originate phone calls. It is the responsibility of API to provide accurate information to BellSouth on a current basis.

4.2 Updates to the SMS shall occur no less than once a week, reflect service order activity affecting either name or telephone number, and involve only record additions, deletions or changes.

4.3 API CNAM records provided for storage in the BellSouth CNAM SCP shall be available, on a SCP query basis only, to all Parties querying the BellSouth CNAM SCP. Further, CNAM service shall be provided by each Party consistent with state and/or federal regulation.

BELLSOUTH/API RATES
NETWORK ELEMENTS
AND OTHER SERVICES

		RATES BY STATE								
DESCRIPTION	**USOC**	**AL**	**FL**	**GA**	**KY**	**LA**	**MS**	**NC**	**SC**	**TN**
NIDs										
NID to NID Cross Connect, 2-Wire or 4-Wire, NRC	UNDC2	$11.63	$6.15	NA	$11.79	$11.72	NA	$11.68	NA	NA
NID to NID Cross Connect, 2-Wire or 4-Wire, NRC	UNDC4	$11.63	$6.15	NA	$11.79	$11.72	NA	$11.68	NA	NA
NID, 1-2 lines, per month	UND12	NA	NA	NA	NA	NA	NA	NA	NA	NA
NRC - 1st	UND12	TBD	$94.50	TBD	$94.56	$93.90	TBD	TBD	TBD	TBD
NRC - Add'l	UND12	TBD	$57.22	TBD	$57.28	$56.67	TBD	TBD	TBD	TBD
NRC - Disconnect Charge - 1st	UND12	TBD	NA	TBD	NA	NA	TBD	TBD	TBD	TBD
NRC - Disconnect Charge - Add'l	UND12	TBD	NA	TBD	NA	NA	TBD	TBD	TBD	TBD
NRC - Service Order submitted Electronically, per LSR	SOMEC	$3.50	$2.75	NA	$3.50	$3.50	NA	$3.50	NA	TBD
NRC - Setvice Order submitted Electronically, per LSR - Disconnect	SOMEC	NA	$0.42	NA	NA	NA	NA	NA	NA	TBD
NRC - Service Order submitted Manually, per LSR	SOMAN	NA	$21.56	NA	$29.24	NA	NA	NA	NA	TBD
NRC - Service Order submitted Manually, per LSR, Disconnect	SOMAN	NA	$3.84	NA	$3.94	NA	NA	NA	NA	TBD
NRC - Incremental Charge - Manual Service Order - 1st	SOMAN	TBD	NA	TBD	NA	NA	TBD	TBD	TBD	TBD
NRC - Incremental Charge - Manual Service Order - Add'l	SOMAN	TBD	NA	TBD	NA	NA	TBD	TBD	TBD	TBD
NRC - Incremental Charge - Manual Service Order - Disconnect	SOMAN	TBD	NA	TBD	NA	NA	TBD	TBD	TBD	TBD
NID, 1-6 lines, per month	UND16	NA	NA	NA	NA	NA	NA	NA	NA	NA
NRC - 1st	UND16	TBD	$136.75	TBD	$136.91	$135.29	TBD	TBD	TBD	TBD
NRC - Add'l	UND16	TBD	$99.47	TBD	$99.63	$98.07	TBD	TBD	TBD	TBD
NRC - Disconnect Charge - 1st	UND16	TBD	NA	TBD	NA	NA	TBD	TBD	TBD	TBD
NRC - Disconnect Charge - Add'l	UND16	TBD	NA	TBD	NA	NA	TBD	TBD	TBD	TBD
NRC - Service Order submitted Electronically, per LSR	SOMEC	$3.50	$2.75	NA	$3.50	$3.50	NA	$3.50	NA	TBD
NRC - Setvice Order submitted Electronically, per LSR - Disconnect	SOMEC	NA	$0.42	NA	NA	NA	NA	NA	NA	TBD
NRC - Service Order submitted Manually, per LSR	SOMAN	NA	$21.56	NA	$29.24	NA	NA	NA	NA	TBD
NRC - Service Order submitted Manually, per LSR, Disconnect	SOMAN	NA	$3.84	NA	$3.94	NA	NA	NA	NA	TBD
NRC - Incremental Charge - Manual Service Order - 1st	SOMAN	TBD	$21.56	TBD	NA	NA	TBD	TBD	TBD	TBD
NRC - Incremental Charge - Manual Service Order - Add'l	SOMAN	TBD	NA	TBD	NA	NA	TBD	TBD	TBD	TBD
NRC - Incremental Charge - Manual Service Order - Disconnect	SOMAN	TBD	$3.84	TBD	NA	NA	TBD	TBD	TBD	TBD
Nonrecurring Charge - customer transfer, feature additions, changes (1)		$5.00	NA	NA	NA	NA	$5.00	NA	NA	NA
LOOP, EXCLUDING NID										
2-Wire Analog VG Loop (Standard), per month		NA	NA	NA	$18.20	NA	NA	NA	NA	NA
NRC - 1st		NA	NA	NA	$86.08	NA	NA	NA	NA	NA
NRC - Add'l		NA	NA	NA	$58.57	NA	NA	NA	NA	NA
2-Wire Analog VG Loop (Customized), per month		NA	NA	NA	$21.41	NA	NA	NA	NA	NA
NRC - 1st		NA	NA	NA	$236.75	NA	NA	NA	NA	NA
NRC - Add'l		NA	NA	NA	$177.10	NA	NA	NA	NA	NA
4-Wire Analog VG Loop (Standard), per month		NA	NA	NA	$26.38	NA	NA	NA	NA	NA
NRC - 1st		NA	NA	NA	$457.14	NA	NA	NA	NA	NA
NRC - Add'l		NA	NA	NA	$348.83	NA	NA	NA	NA	NA
2-Wire ISDN Digital Grade Loop (Standard), per month		NA	NA	NA	$29.65	NA	NA	NA	NA	NA
NRC - 1st		NA	NA	NA	$541.28	NA	NA	NA	NA	NA
NRC - Add'l		NA	NA	NA	$431.61	NA	NA	NA	NA	NA
2-Wire ADSL Loop (Standard), per month		NA	NA	NA	$10.63	NA	NA	NA	NA	NA
NRC - 1st		NA	NA	NA	$713.50	NA	NA	NA	NA	NA
NRC - Add'l		NA	NA	NA	$609.44	NA	NA	NA	NA	NA
2-Wire HDSL Loop (Standard), per month		NA	NA	NA	$7.40	NA	NA	NA	NA	NA
NRC - 1st		NA	NA	NA	$713.50	NA	NA	NA	NA	NA
NRC - Add'l		NA	NA	NA	$609.44	NA	NA	NA	NA	NA
4-Wire HDSL Loop (Standard), per month		NA	NA	NA	$9.70	NA	NA	NA	NA	NA
NRC - 1st		NA	NA	NA	$748.93	NA	NA	NA	NA	NA
NRC - Add'l		NA	NA	NA	$646.17	NA	NA	NA	NA	NA

BELLSOUTH/API RATES
NETWORK ELEMENTS
AND OTHER SERVICES

		RATES BY STATE								
DESCRIPTION	**USOC**	**AL**	**FL**	**GA**	**KY**	**LA**	**MS**	**NC**	**SC**	**TN**
LOOP, INCLUDING NID										
2-Wire Analog VG Loop-SL1										
RC - Statewide, per month	UEAL2	NA	NA	NA	NA	NA	NA	$15.88	NA	NA
RC - Zone 1, per month (Note 2)	UEAL2	$15.24	$13.75	$14.21	$14.79	$14.96	$15.58	TBD	$18.48	$15.92
RC - Zone 2, per month (Note 2)	UEAL2	$24.75	$20.13	$16.41	$27.68	$25.69	$20.65	TBD	$27.87	$20.79
RC - Zone 3, per month (Note 2)	UEAL2	$44.85	$44.40	$26.08	$47.78	$52.47	$29.51	TBD	$36.91	$27.18
RC - Zone 4, per month (Note 2)	UEAL2	NA	NA	NA	NA	NA	$38.94	NA	NA	NA
NRC - 1st	UEAL2	$59.03	$83.20	$42.54	$86.08	$40.69	$59.25	$57.99	$70.44	$78.93
NRC - Add'l	UEAL2	$43.14	$35.12	$31.33	$58.57	$29.96	$43.67	$42.37	$44.05	$50.98
NRC - Disconnect Charge - 1st	UEAL2	$15.21	$55.97	NA	NA	$11.48	$16.35	NA	NA	NA
NRC - Disconnect Charge - Add'l	UEAL2	$3.22	$10.35	NA	NA	$3.36	$4.06	NA	NA	NA
NRC - Service Order submitted Electronically, per LSR	SOMEC	$3.50	$2.75	$3.50	$3.50	$3.50	$3.50	$3.50	$3.50	$3.50
NRC - Setvice Order submitted Electronically, per LSR - Disconnect	SOMEC	NA	$0.42	NA	NA	NA	NA	NA	NA	TBD
NRC - Service Order submitted Manually, per LSR	SOMAN	NA	$21.56	NA	$29.24	NA	NA	NA	NA	$19.99
NRC - Service Order submitted Manually, per LSR, Disconnect	SOMAN	NA	$3.84	NA	$3.94	NA	NA	NA	NA	TBD
NRC - Incremental Charge - Manual Service Order - 1st	SOMAN	$27.37	NA	$18.94	NA	$18.14	$25.52	$26.94	$44.22	NA
NRC - Incremental Charge - Manual Service Order - Add'l	SOMAN	$12.97	NA	$8.42	NA	$8.06	$11.34	$12.76	$13.55	NA
NRC - Incremental Charge - Manual Service Order - Disconnect	SOMAN	$17.77	NA	NA	NA	$11.41	$16.06	NA	NA	NA
NRC - Incremental Charge - Order Coordination for SL1 loops (per loop)	UEAMC	$51.29	$23.24	$36.46	$16.31	$34.90	$50.29	$61.38	$62.10	$36.46
NRC - Incremental Charge - Order Coordination - Time Specific (per LSR)	OCOSL	$45.99	$36.18	$34.22	$36.18	$32.77	$45.27	$45.34	$45.43	$34.22
NRC - Engineering Information (EI) - interim rates until cost study is prepared based on inputs that reflect the work required to extract the Engineering Information.	UEANM	$25.00	$40.00	$20.00	$40.00	$20.00	$25.00	$20.00	$25.00	$40.00
2-Wire Analog VG Loop-SL2 w/loop or ground start signaling		41%	38%	41%	36%	41%	41%	41%	40%	41%
RC - Statewide, per month	UEAL2	NA	NA	NA	NA	NA	NA	$19.50	NA	NA
RC - Zone 1, per month (Note 2)	UEAL2	$17.95	$18.48	$16.84	$17.27	$17.65	$18.35	TBD	$21.57	$15.92
RC - Zone 2, per month (Note 2)	UEAL2	$29.16	$22.43	$19.45	$32.32	$30.32	$24.33	TBD	$32.53	$20.79
RC - Zone 3, per month (Note 2)	UEAL2	$52.84	$27.87	$30.92	$55.78	$61.93	$34.77	TBD	$43.08	$27.18
RC - Zone 4, per month (Note 2)	UEAL2	NA	NA	NA	NA	NA	$45.88	NA	NA	NA
NRC - 1st	UEAL2	$145.46	$218.96	$104.17	$236.75	$99.69	$144.01	$142.97	$178.12	$192.97
NRC - Add'l	UEAL2	$108.40	$136.44	$78.10	$177.10	$74.73	$107.70	$106.56	$128.80	$140.72
NRC - Disconnect Charge - 1st	UEAL2	$40.31	$113.41	NA	NA	$28.73	$40.98	NA	NA	NA
NRC - Disconnect Charge - Add'l	UEAL2	$26.01	$20.58	NA	NA	$18.87	$26.95	NA	NA	NA
NRC - Service Order submitted Electronically, per LSR	SOMEC	$3.50	$2.75	$3.50	$3.50	$3.50	$3.50	$3.50	$3.50	$3.50
NRC - Setvice Order submitted Electronically, per LSR - Disconnect	SOMEC	NA	$0.42	NA	NA	NA	NA	NA	NA	TBD
NRC - Service Order submitted Manually, per LSR	SOMAN	NA	$21.56	NA	$29.24	NA	NA	NA	NA	$19.99
NRC - Service Order submitted Manually, per LSR, Disconnect	SOMAN	NA	$3.84	NA	$3.94	NA	NA	NA	NA	TBD
NRC - Incremental Charge - Manual Service Order - 1st	SOMAN	$27.37	NA	$18.94	NA	$18.14	$25.52	$26.94	$44.42	NA
NRC - Incremental Charge - Manual Service Order - Add'l	SOMAN	$12.97	NA	$8.42	NA	$8.06	$11.34	$12.76	$13.55	NA
NRC - Incremental Charge - Manual Service Order - Disconnect	SOMAN	$17.77	NA	NA	NA	$11.41	$26.95	NA	NA	NA
NRC - Incremental Charge - Order Coordination - Time Specific (per LSR)	OCOSL	$45.99	$23.24	$34.22	$36.18	$32.77	$45.27	$45.34	$45.43	$55.00
2-Wire Analog VG Loop-SL2 w/ reverse battery signaling										
RC - Statewide, per month	UEAR2	NA	NA	NA	NA	NA	NA	$19.50	NA	NA
RC - Zone 1, per month (Note 2)	UEAR2	$17.95	$18.48	$16.84	$17.27	$17.65	$18.35	TBD	$21.57	$15.92
RC - Zone 2, per month (Note 2)	UEAR2	$29.16	$22.43	$19.45	$32.32	$30.32	$24.33	TBD	$32.53	$20.79
RC - Zone 3, per month (Note 2)	UEAR2	$52.84	$27.87	$30.92	$55.78	$61.93	$34.77	TBD	$43.08	$27.18
RC - Zone 4, per month (Note 2)	UEAR2	NA	NA	NA	NA	NA	$45.88	NA	NA	NA
NRC - 1st	UEAR2	$145.46	$218.96	$104.17	$236.75	$99.69	$144.01	$142.97	$178.12	$192.97
NRC - Add'l	UEAR2	$108.40	$136.44	$78.10	$177.10	$74.73	$107.70	$106.56	$128.80	$140.72
NRC - Disconnect Charge - 1st	UEAR2	$40.31	$113.41	NA	NA	$28.73	$40.98	NA	NA	NA
NRC - Disconnect Charge - Add'l	UEAR2	$26.01	$20.58	NA	NA	$18.87	$26.95	NA	NA	NA
NRC - Service Order submitted Electronically, per LSR	SOMEC	$3.50	$2.75	$3.50	$3.50	$3.50	$3.50	$3.50	$3.50	$3.50

BELLSOUTH/API RATES
NETWORK ELEMENTS
AND OTHER SERVICES

		RATES BY STATE								
DESCRIPTION	**USOC**	**AL**	**FL**	**GA**	**KY**	**LA**	**MS**	**NC**	**SC**	**TN**
NRC - Setvice Order submitted Electronically, per LSR - Disconnect	SOMEC	NA	$0.42	NA	NA	NA	NA	NA	NA	TBD
NRC - Service Order submitted Manually, per LSR	SOMAN	NA	$21.56	NA	$29.24	NA	NA	NA	NA	$19.99
NRC - Service Order submitted Manually, per LSR, Disconnect	SOMAN	NA	$3.84	NA	$3.94	NA	NA	NA	NA	TBD
NRC - Incremental Charge - Manual Service Order - 1st	SOMAN	$27.37	NA	$18.94	NA	$18.14	$25.52	$26.94	$44.42	NA
NRC - Incremental Charge - Manual Service Order - Add'l	SOMAN	$12.97	NA	$8.42	NA	$8.06	$11.34	$12.76	$13.55	NA
NRC - Incremental Charge - Manual Service Order - Disconnect	SOMAN	$17.77	NA	NA	NA	$11.41	$26.95	NA	NA	NA
NRC - Incremental Charge - Order Coordination - Time Specific (per LSR)	OCOCL	$45.99	$36.18	$34.22	$36.18	$32.77	$45.27	$45.34	$45.43	$55.00
4-Wire Analog VG Loop										
RC - Statewide, per month	UEAL4	NA	NA	NA	NA	NA	NA	$27.49	NA	NA
RC - Zone 1, per month (Note 2)	UEAL4	$24.01	$24.26	$22.26	$20.92	$24.36	$22.38	TBD	$29.47	$15.92
RC - Zone 2, per month (Note 2)	UEAL4	$39.00	$35.51	$25.70	$39.14	$41.85	$29.67	TBD	$44.44	$20.79
RC - Zone 3, per month (Note 2)	UEAL4	$70.67	$78.35	$40.85	$67.56	$85.47	$42.40	TBD	$58.85	$27.18
RC - Zone 4, per month (Note 2)	UEAL4	NA	NA	NA	NA	NA	$55.96	NA	NA	NA
NRC - 1st	UEAL4	$293.70	$141.00	$206.95	$457.14	$198.10	$289.06	$288.47	$383.39	$58.50
NRC - Add'l	UEAL4	$241.76	$43.00	$170.57	$348.83	$163.26	$238.19	$237.45	$286.77	$31.00
NRC - Disconnect Charge - 1st	UEAL4	$108.96	$122.15	NA	NA	$74.27	$108.14	NA	NA	NA
NRC - Disconnect Charge - Add'l	UEAL4	$57.01	$27.42	NA	NA	$39.44	$57.28	NA	NA	NA
NRC - Service Order submitted Electronically, per LSR	SOMEC	$3.50	$2.75	$3.50	$3.50	$3.50	$3.50	$3.50	$3.50	$3.50
NRC - Setvice Order submitted Electronically, per LSR - Disconnect	SOMEC	NA	$0.42	NA	NA	NA	NA	NA	NA	TBD
NRC - Service Order submitted Manually, per LSR	SOMAN	NA	$21.56	NA	$29.24	NA	NA	NA	NA	$19.99
NRC - Service Order submitted Manually, per LSR, Disconnect	SOMAN	NA	$3.84	NA	$3.94	NA	NA	NA	NA	TBD
NRC - Incremental Charge - Manual Service Order - 1st	SOMAN	$27.37	NA	$18.94	NA	$18.14	$25.52	$26.94	$44.06	NA
NRC - Incremental Charge - Manual Service Order - Add'l	SOMAN	$12.97	NA	$8.42	NA	$8.06	$11.34	$12.76	$13.55	NA
NRC - Incremental Charge - Manual Service Order - Disconnect	SOMAN	$17.77	NA	NA	NA	$11.41	$16.06	NA	NA	NA
NRC - Incremental Charge - Order Coordination - Time Specific (per LSR)	OCOSL	$45.99	$36.18	$34.22	$36.18	$32.77	$45.27	$45.34	$45.43	$55.00
2-Wire ISDN Digital Grade Loop										
RC - Statewide, per month	U1L2X	NA	NA	NA	NA	NA	NA	$24.98	NA	NA
RC - Zone 1, per month (Note 2)	U1L2X	$23.23	$32.34	$21.89	$23.66	$21.15	$21.86	TBD	$26.68	$15.92
RC - Zone 2, per month (Note 2)	U1L2X	$37.74	$47.35	$25.27	$44.28	$36.22	$28.97	TBD	$40.24	$20.79
RC - Zone 3, per month (Note 2)	U1L2X	$68.38	$104.47	$40.17	$76.42	$74.19	$41.40	TBD	$53.29	$27.18
RC - Zone 4, per month (Note 2)	U1L2X	NA	NA	NA	NA	NA	$54.64	NA	NA	NA
NRC - 1st	U1L2X	$331.85	$306.00	$233.38	$541.28	$223.27	$326.38	$325.91	$423.04	$58.50
NRC - Add'l	U1L2X	$255.87	$283.00	$180.35	$431.61	$172.63	$252.00	$251.31	$301.75	$31.00
NRC - Disconnect Charge - 1st	U1L2X	$108.95	$111.10	NA	NA	$74.27	$108.14	NA	NA	NA
NRC - Disconnect Charge - Add'l	U1L2X	$57.01	$18.28	NA	NA	$39.44	$57.27	NA	NA	NA
NRC - Service Order submitted Electronically, per LSR	SOMEC	$3.50	$2.75	$3.50	$3.50	$3.50	$3.50	$3.50	$3.50	$3.50
NRC - Setvice Order submitted Electronically, per LSR - Disconnect	SOMEC	NA	$0.42	NA	NA	NA	NA	NA	NA	TBD
NRC - Service Order submitted Manually, per LSR	SOMAN	NA	$21.56	NA	$29.24	NA	NA	NA	NA	$19.99
NRC - Service Order submitted Manually, per LSR, Disconnect	SOMAN	NA	$3.84	NA	$3.94	NA	NA	NA	NA	TBD
NRC - Incremental Charge - Manual Service Order - 1st	SOMAN	$27.37	NA	$18.94	NA	$18.14	$25.52	$26.94	$44.42	NA
NRC - Incremental Charge - Manual Service Order - Add'l	SOMAN	$12.97	NA	$8.42	NA	$8.06	$11.34	$12.76	$13.55	NA
NRC - Incremental Charge - Manual Service Order - Disconnect	SOMAN	$17.77	NA	NA	NA	$11.41	$16.06	NA	NA	NA
NRC - Incremental Charge - Order Coordination - Time Specific (per LSR)	OCOSL	$45.99	$36.18	$34.22	$36.18	$32.77	$45.27	$45.34	$45.43	$55.00
2-Wire Universal Digital Carrier (UDC), statewide, per month	UDC2X	NA	NA	NA	NA	NA	NA	$24.98	NA	NA
Zone 1, per month	UDC2X	$23.23	$32.34	$21.89	$23.66	$21.15	$21.86	TBD	$26.68	$15.92
Zone 2, per month	UDC2X	$37.74	$47.35	$25.27	$44.28	$36.22	$28.97	TBD	$40.24	$20.79
Zone 3, per month	UDC2X	$68.38	$104.47	$40.17	$76.42	$74.19	$41.40	TBD	$53.29	$27.18
Zone 4, per month	UDC2X	NA	NA	NA	NA	NA	$54.64	NA	NA	NA
NRC - 1st	UDC2X	$331.85	$306.00	$233.38	$541.28	$223.27	$326.38	$325.91	$423.04	$58.50
NRC - Add'l	UDC2X	$255.87	$283.00	$180.35	$431.61	$172.63	$252.00	$251.31	$301.75	$31.00
NRC - Disconnect Charge - 1st	UDC2X	$108.95	$111.10	NA	NA	$74.27	$108.14	NA	NA	NA

BELLSOUTH/API RATES
NETWORK ELEMENTS
AND OTHER SERVICES

		RATES BY STATE								
DESCRIPTION	**USOC**	**AL**	**FL**	**GA**	**KY**	**LA**	**MS**	**NC**	**SC**	**TN**
NRC - Disconnect Charge - Add'l	UDC2X	$57.01	$18.28	NA	NA	$39.44	$57.27	NA	NA	NA
NRC - Service Order submitted Electronically, per LSR	SOMEC	$3.50	$2.75	$3.50	$3.50	$3.50	$3.50	$3.50	$3.50	$3.50
NRC - Setvice Order submitted Electronically, per LSR - Disconnect	SOMEC	NA	$0.42	NA	NA	NA	NA	NA	NA	TBD
NRC - Service Order submitted Manually, per LSR	SOMAN	NA	$21.56	NA	$29.24	NA	NA	NA	NA	$19.99
NRC - Service Order submitted Manually, per LSR, Disconnect	SOMAN	NA	$3.84	NA	$3.94	NA	NA	NA	NA	TBD
NRC - Incremental Charge - Manual Service Order - 1st	SOMAN	$27.37	NA	$18.94	NA	$18.14	$25.52	$26.94	$44.42	NA
NRC - Incremental Charge - Manual Service Order - Add'l	SOMAN	$12.97	NA	$8.42	NA	$8.06	$11.34	$12.76	$13.55	NA
NRC - Incremental Charge - Manual Service Order - Disconnect	SOMAN	$17.77	NA	NA	NA	$11.41	$16.06	NA	NA	NA
NRC - Incremental Charge - Order Coordination - Time Specific (per LSR)	OCOSL	$45.99	$36.18	$34.22	$36.18	$32.77	$45.27	$45.34	$45.43	$55.00
2-Wire ADSL Compatible Loop incl Man Svc Inquiry & Fac Reservation										
RC - Statewide, per month	UAL2X	NA	NA	NA	NA	NA	NA	$14.60	NA	NA
RC - Zone 1, per month (Note 2)	UAL2X	$12.09	$12.78	$11.23	$8.79	$11.90	$10.87	TBD	$17.10	$15.93
RC - Zone 2, per month (Note 2)	UAL2X	$19.64	$18.72	$12.97	$16.46	$20.43	$14.40	TBD	$25.79	$20.05
RC - Zone 3, per month (Note 2)	UAL2X	$35.59	$41.29	$20.62	$28.40	$41.73	$20.58	TBD	$34.15	$28.74
RC - Zone 4, per month (Note 2)	UAL2X	NA	NA	NA	NA	NA	$27.16	NA	NA	NA
NRC - 1st	UAL2X	$514.21	$113.85	$359.73	$713.50	$343.13	$504.82	$504.90	$600.61	$640.79
NRC - Add'l	UAL2X	$464.58	$99.61	$325.15	$609.44	$310.03	$456.24	$456.17	$507.33	$541.94
NRC - Disconnect Charge - 1st	UAL2X	$106.65	$154.23	NA	NA	$72.54	$105.86	NA	NA	NA
NRC - Disconnect Charge - Add'l	UAL2X	$56.98	$35.23	NA	NA	$39.42	$57.25	$26.94	NA	NA
NRC - Service Order submitted Electronically, per LSR	SOMEC	$3.50	$2.75	$3.50	$3.50	$3.50	$3.50	$3.50	$3.50	$3.50
NRC - Service Order submitted Manually, per LSR	SOMAN	NA	$21.56	NA	$29.24	NA	NA	NA	NA	$19.99
NRC - Service Order submitted Manually, per LSR, Disconnect	SOMAN	NA	$3.84	NA	$3.94	NA	NA	NA	NA	TBD
NRC - Incremental Charge - Manual Service Order - 1st	SOMAN	$27.37	NA	$18.94	NA	$18.14	$25.52	$12.76	$44.42	NA
NRC - Incremental Charge - Manual Service Order - Add'l	SOMAN	$12.97	NA	$8.42	NA	$8.06	$11.34	NA	$13.55	NA
NRC - Incremental Charge - Manual Service Order - Disconnect	SOMAN	$17.77	NA	NA	NA	$11.41	$16.06	NA	NA	NA
NRC - Incremental Charge - Order Coordination - Time Specific (per LSR)	OCOSL	$45.99	$36.18	$34.22	$36.18	$32.77	$45.27	$45.34	$45.43	$55.00
2-Wire ADSL Compatible Loop without Man Svc Inquiry & Fac Reservation										
RC - Statewide, per month	UAL2W	NA	NA	NA	NA	NA	NA	$14.60	NA	NA
Zone 1, per month	UAL2W	$12.09	$12.78	$11.23	$8.79	$11.90	$10.87	TBD	$17.10	$15.93
Zone 2, per month	UAL2W	$19.64	$18.72	$12.97	$16.46	$20.43	$14.40	TBD	$25.79	$20.05
Zone 3, per month	UAL2W	$35.59	$41.29	$20.62	$28.40	$41.73	$20.58	TBD	$34.15	$28.74
Zone 4, per month	UAL2W	NA	NA	NA	NA	NA	$27.16	NA	NA	NA
NRC - 1st	UAL2W	$375.21	$258.86	$220.73	$260.95	$255.34	$365.82	$365.90	$461.60	$501.79
NRC - Add'l	UAL2W	$325.58	$175.48	$186.15	$176.21	$170.72	$317.24	$317.17	$368.33	$402.94
NRC - Disconnect Charge - 1st	UAL2W	$106.65	$108.29	NA	$112.86	$112.32	$105.86	NA	NA	NA
NRC - Disconnect Charge - Add'l	UAL2W	$56.98	$15.46	NA	$15.88	$15.81	$57.25	$26.94	NA	NA
NRC - Service Order submitted Electronically, per LSR	SOMEC	$3.50	$2.75	$3.50	$3.50	$3.50	$3.50	$3.50	$3.50	$3.50
NRC - Setvice Order submitted Electronically, per LSR - Disconnect	SOMEC	NA	$0.42	NA	NA	NA	NA	NA	NA	TBD
NRC - Service Order submitted Manually, per LSR	SOMAN	NA	$21.56	NA	$29.24	NA	NA	NA	NA	$19.99
NRC - Service Order submitted Manually, per LSR, Disconnect	SOMAN	NA	$3.84	NA	$3.94	NA	NA	NA	NA	TBD
NRC - Incremental Charge - Manual Service Order - 1st	SOMAN	$27.37	NA	$18.94	NA	$18.14	$25.52	$12.76	$44.42	NA
NRC - Incremental Charge - Manual Service Order - Add'l	SOMAN	$12.97	NA	$8.42	NA	$8.06	$11.34	NA	$13.55	NA
NRC - Incremental Charge - Manual Service Order - Disconnect	SOMAN	$17.77	NA	NA	NA	$11.41	$16.06	NA	NA	NA
NRC - Incremental Charge - Order Coordination - Time Specific (per LSR)	OCOSL	$45.99	$36.18	$34.22	$36.18	$32.77	$45.27	$45.34	$45.43	$55.00
2-Wire HDSL Compatible Loop, incl Man Svc Inquiry & Fac Reserv										
RC - Statewide, per month	UHL2X	NA	NA	NA	NA	NA	NA	$11.98	NA	NA
RC - Zone 1, per month (Note 2)	UHL2X	$9.41	$9.80	$7.88	$6.29	$8.97	$8.50	TBD	$12.21	$11.62
RC - Zone 2, per month (Note 2)	UHL2X	$15.29	$14.35	$9.09	$11.78	$15.41	$11.26	TBD	$18.41	$14.62
RC - Zone 3, per month (Note 2)	UHL2X	$27.70	$31.65	$14.46	$20.33	$31.48	$16.10	TBD	$24.39	$20.96
RC - Zone 4, per month (Note 2)	UHL2X	NA	NA	NA	NA	NA	$21.25	NA	NA	NA
NRC - 1st	UHL2X	$514.21	$113.85	$359.73	$713.50	$343.13	$504.82	$504.90	$600.61	$640.79

BELLSOUTH/API RATES
NETWORK ELEMENTS
AND OTHER SERVICES

		RATES BY STATE								
DESCRIPTION	**USOC**	**AL**	**FL**	**GA**	**KY**	**LA**	**MS**	**NC**	**SC**	**TN**
NRC - Add'l	UHL2X	$464.58	$99.61	$325.15	$609.44	$310.03	$456.24	$456.17	$507.33	$541.94
NRC - Disconnect Charge - 1st	UHL2X	$106.65	$154.23	NA	NA	$72.54	$105.86	NA	NA	NA
NRC - Disconnect Charge - Add'l	UHL2X	$56.98	$35.23	NA	NA	$39.42	$57.25	NA	NA	NA
NRC - Service Order submitted Electronically, per LSR	SOMEC	$3.50	$2.75	$3.50	$3.50	$3.50	$3.50	$3.50	$3.50	$3.50
NRC - Setvice Order submitted Electronically, per LSR - Disconnect	SOMEC	NA	$0.42	NA	NA	NA	NA	NA	NA	TBD
NRC - Service Order submitted Manually, per LSR	SOMAN	NA	$21.56	NA	$29.24	NA	NA	NA	NA	$19.99
NRC - Service Order submitted Manually, per LSR, Disconnect	SOMAN	NA	$3.84	NA	$3.94	NA	NA	NA	NA	TBD
NRC - Incremental Charge - Manual Service Order - 1st	SOMAN	$27.37	NA	$18.94	NA	$18.14	$25.52	$26.94	$44.06	NA
NRC - Incremental Charge - Manual Service Order - Add'l	SOMAN	$12.97	NA	$8.42	NA	$8.06	$11.34	$12.76	$13.55	NA
NRC - Incremental Charge - Manual Service Order - Disconnect	SOMAN	$17.77	NA	NA	NA	$11.41	$16.06	NA	NA	NA
NRC - Incremental Charge - Order Coordination - Time Specific (per LSR)	OCOSL	$45.99	$36.18	$34.22	$36.18	$32.77	$45.27	$45.34	$45.43	$55.00
2-Wire HDSL Compatible Loop, without Man Svc Inquiry & Fac Reserv										
Statewide, per month	UHL2W	NA	NA	NA	NA	NA	NA	$11.98	NA	NA
Zone 1, per month	UHL2W	$9.41	$9.80	$7.88	$6.29	$8.97	$8.50	TBD	$12.21	$11.62
Zone 2, per month	UHL2W	$15.29	$14.35	$9.09	$11.78	$15.41	$11.26	TBD	$18.41	$14.62
Zone 3, per month	UHL2W	$27.70	$31.65	$14.48	$20.33	$31.48	$16.10	TBD	$24.39	$20.96
Zone 4, per month	UHL2W	NA	NA	NA	NA	NA	$21.25	NA	NA	NA
NRC - 1st	UHL2W	$375.21	$276.19	$220.73	$278.28	$272.64	$365.82	$365.90	$461.60	$501.79
NRC - Add'l	UHL2W	$325.58	$192.81	$186.15	$193.54	$188.02	$317.24	$317.17	$368.33	$402.94
NRC - Disconnect Charge - 1st	UHL2W	$106.65	$108.29	NA	$112.86	$112.32	$105.86	NA	NA	NA
NRC - Disconnect Charge - Add'l	UHL2W	$56.98	$15.46	NA	$15.88	$15.81	$57.25	NA	NA	NA
NRC - Service Order submitted Electronically, per LSR	SOMEC	$3.50	$2.75	$3.50	$3.50	$3.50	$3.50	$3.50	$3.50	$3.50
NRC - Setvice Order submitted Electronically, per LSR - Disconnect	SOMEC	NA	$0.42	NA	NA	NA	NA	NA	NA	TBD
NRC - Service Order submitted Manually, per LSR	SOMAN	NA	$21.56	NA	$29.24	NA	NA	NA	NA	$19.99
NRC - Service Order submitted Manually, per LSR, Disconnect	SOMAN	NA	$3.84	NA	$3.94	NA	NA	NA	NA	TBD
NRC - Incremental Charge - Manual Service Order - 1st	SOMAN	$27.37	NA	$18.94	NA	$18.14	$25.52	$26.94	$44.06	NA
NRC - Incremental Charge - Manual Service Order - Add'l	SOMAN	$12.97	NA	$8.42	NA	$8.06	$11.34	$12.76	$13.55	NA
NRC - Incremental Charge - Manual Service Order - Disconnect	SOMAN	$17.77	NA	NA	NA	$11.41	$16.06	NA	NA	NA
NRC - Incremental Charge - Order Coordination - Time Specific (per LSR)	OCOSL	$45.99	$36.18	$34.22	$36.18	$32.77	$45.27	$45.34	$45.43	$55.00
4-Wire HDSL Compatible Loop, incl Man Svc Inquiry & Fac Reserv										
RC - Statewide, per month	UHL4X	NA	NA	NA	NA	NA	NA	$13.97	NA	$17.91
RC - Zone 1, per month (Note 2)	UHL4X	$11.52	$14.75	$10.39	$7.68	$12.97	$10.36	TBD	$16.21	$15.46
RC - Zone 2, per month (Note 2)	UHL4X	$18.71	$21.59	$12.00	$14.38	$21.76	$13.73	TBD	$24.45	$19.46
RC - Zone 3, per month (Note 2)	UHL4X	$33.90	$47.64	$19.07	$24.82	$44.44	$19.62	TBD	$32.38	$27.88
RC - Zone 4, per month (Note 2)	UHL4X	NA	NA	NA	NA	NA	$25.90	NA	NA	NA
NRC - 1st	UHL4X	$541.13	$116.91	$378.86	$748.93	$361.45	$531.21	$531.35	$625.11	$666.70
NRC - Add'l	UHL4X	$491.50	$101.71	$344.28	$646.17	$328.35	$482.63	$482.62	$532.78	$568.86
NRC - Disconnect Charge - 1st	UHL4X	$106.65	$161.19	NA	NA	$72.54	$105.86	NA	NA	NA
NRC - Disconnect Charge - Add'l	UHL4X	$56.98	$26.10	NA	NA	$39.42	$57.25	NA	NA	NA
NRC - Service Order submitted Electronically, per LSR	SOMEC	$3.50	$2.75	$3.50	$3.50	$3.50	$3.50	$3.50	$3.50	$3.50
NRC - Setvice Order submitted Electronically, per LSR - Disconnect	SOMEC	NA	$0.42	NA	NA	NA	NA	NA	NA	TBD
NRC - Service Order submitted Manually, per LSR	SOMAN	NA	$21.56	NA	$29.24	NA	NA	NA	NA	$19.99
NRC - Service Order submitted Manually, per LSR, Disconnect	SOMAN	NA	$3.84	NA	$3.94	NA	NA	NA	NA	TBD
NRC - Incremental Charge - Manual Service Order - 1st	SOMAN	$27.37	NA	$18.94	NA	$18.14	$25.52	$26.94	$44.06	NA
NRC - Incremental Charge - Manual Service Order - Add'l	SOMAN	$12.97	NA	$8.42	NA	$8.06	$11.34	$12.76	$13.55	NA
NRC - Incremental Charge - Manual Service Order - Disconnect	SOMAN	$17.77	NA	NA	NA	$11.41	$16.06	NA	NA	NA
NRC - Incremental Charge - Order Coordination - Time Specific (per LSR)	OCOSL	$45.99	$36.18	$34.22	$36.18	$32.77	$45.27	$45.34	$45.43	$55.00
4-Wire HDSL Compatible Loop, without Man Svc Inquiry & Fac Res										
Statewide, per month	UHL4W	NA	NA	NA	NA	NA	NA	$13.97	NA	$17.91
Zone 1, per month	UHL4W	$11.52	$14.75	$10.39	$7.68	$12.97	$10.36	TBD	$16.21	$15.46

BELLSOUTH/API RATES
NETWORK ELEMENTS
AND OTHER SERVICES

DESCRIPTION	USOC	RATES BY STATE								
		AL	FL	GA	KY	LA	MS	NC	SC	TN
Zone 2, per month	UHL4W	$18.71	$21.59	$12.00	$14.38	$21.76	$13.73	TBD	$24.45	$19.46
Zone 3, per month	UHL4W	$33.90	$47.64	$19.07	$24.82	$44.44	$19.62	TBD	$32.38	$27.88
Zone 4, per month	UHL4W	NA	NA	NA	NA	NA	$25.90	NA	NA	NA
NRC - 1st	UHL4W	$402.13	$333.40	$239.86	$276.76	$329.76	$392.21	$392.35	$486.11	$527.70
NRC - Add'l	UHL4W	$352.50	$250.01	$205.28	$192.02	$245.15	$343.63	$343.62	$393.78	$429.86
NRC - Disconnect Charge - 1st	UHL4W	$106.65	$114.30	NA	$122.17	$124.19	$105.86	NA	NA	NA
NRC - Disconnect Charge - Add'l	UHL4W	$56.98	$19.58	NA	$20.64	$20.98	$57.25	NA	NA	NA
NRC - Service Order submitted Electronically, per LSR	SOMEC	$3.50	$2.75	$3.50	$3.50	$3.50	$3.50	$3.50	$3.50	$3.50
NRC - Setvice Order submitted Electronically, per LSR - Disconnect	SOMEC	NA	$0.42	NA	NA	NA	NA	NA	NA	TBD
NRC - Service Order submitted Manually, per LSR	SOMAN	NA	$21.56	NA	$29.24	NA	NA	NA	NA	$19.99
NRC - Service Order submitted Manually, per LSR, Disconnect	SOMAN	NA	$3.84	NA	$3.94	NA	NA	NA	NA	TBD
NRC - Incremental Charge - Manual Service Order - 1st	SOMAN	$27.37	NA	$18.94	NA	$18.14	$25.52	$26.94	$44.06	NA
NRC - Incremental Charge - Manual Service Order - Add'l	SOMAN	$12.97	NA	$8.42	NA	$8.06	$11.34	$12.76	$13.55	NA
NRC - Incremental Charge - Manual Service Order - Disconnect	SOMAN	$17.77	NA	NA	NA	$11.41	$16.06	NA	NA	NA
NRC - Incremental Charge - Order Coordination - Time Specific (per LSR)	OCOSL	$45.99	$36.18	$34.22	$36.18	$32.77	$45.27	$45.34	$45.43	$55.00
4-Wire DS1 Digital Loop										
RC - Statewide, per month	USLXX	NA	NA	NA	NA	NA	NA	$62.78	NA	NA
RC - Zone 1, per month (Note 2)	USLXX	$51.74	$64.69	$55.53	$50.26	$56.32	$50.99	TBD	$59.61	$57.73
RC - Zone 2, per month (Note 2)	USLXX	$84.05	$94.71	$64.13	$94.06	$96.73	$67.58	TBD	$89.90	$75.40
RC - Zone 3, per month (Note 2)	USLXX	$152.29	$208.93	$101.93	$162.34	$197.57	$96.58	TBD	$119.06	$98.59
RC - Zone 4, per month (Note 2)	USLXX	NA	NA	NA	NA	NA	$127.47	NA	NA	NA
NRC - 1st	USLXX	$610.13	$540.00	$429.98	$849.80	$410.38	$599.09	$714.84	$715.77	$313.08
NRC - Add'l	USLXX	$380.26	$465.00	$268.18	$523.27	$255.48	$373.90	$421.47	$421.50	$219.72
NRC - Disconnect Charge - 1st	USLXX	$134.77	$82.85	NA	NA	$92.35	$133.53	NA	NA	$96.86
NRC - Disconnect Charge - Add'l	USLXX	$55.97	$21.69	NA	NA	$38.44	$56.25	NA	NA	$40.45
NRC - Service Order submitted Electronically, per LSR	SOMEC	$3.50	$2.75	$3.50	$3.50	$3.50	$3.50	$3.50	$3.50	$3.50
NRC - Setvice Order submitted Electronically, per LSR - Disconnect	SOMEC	NA	$0.42	NA	NA	NA	NA	NA	NA	TBD
NRC - Service Order submitted Manually, per LSR	SOMAN	NA	$21.56	NA	$29.24	NA	NA	NA	NA	$19.99
NRC - Service Order submitted Manually, per LSR, Disconnect	SOMAN	NA	$3.84	NA	$3.94	NA	NA	NA	NA	TBD
NRC - Incremental Charge - Manual Service Order - 1st	SOMAN	$27.37	NA	$18.94	NA	$18.14	$25.52	$26.94	$43.77	NA
NRC - Incremental Charge - Manual Service Order - Add'l	SOMAN	$12.97	NA	$8.42	NA	$8.06	$11.34	$12.76	$13.55	NA
NRC - Incremental Charge - Manual Service Order - Disconnect	SOMAN	$17.77	NA	NA	NA	$11.41	$16.06	NA	NA	NA
NRC - Incremental Charge - Order Coordination - Time Specific (per LSR)	OCOSL	$49.18	$36.18	$34.52	$36.18	$33.05	$48.17	$45.34	$48.47	$55.00
4-Wire 56 Kbps Dig Grade Loop										
RC - Statewide, per month	UDL56	NA	NA	NA	NA	NA	NA	$32.67	NA	$42.23
RC - Zone 1, per month (Note 2)	UDL56	$27.33	$39.08	$25.75	$35.92	$27.50	$25.61	TBD	$34.26	$36.45
RC - Zone 2, per month (Note 2)	UDL56	$44.40	$57.21	$29.74	$40.32	$47.24	$33.94	TBD	$51.67	$45.87
RC - Zone 3, per month (Note 2)	UDL56	$80.45	$126.22	$47.27	$37.90	$96.48	$48.51	TBD	$68.43	$65.75
RC - Zone 4, per month (Note 2)	UDL56	NA	NA	NA	NA	NA	$64.02	NA	NA	NA
NRC - 1st	UDL56	$498.05	$654.72	$348.55	$258.62	$333.28	$489.00	$489.04	$602.73	$643.00
NRC - Add'l	UDL56	$343.70	$428.45	$241.20	$176.11	$230.50	$337.93	$337.51	$393.50	$421.26
NRC - Disconnect Charge - 1st	UDL56	$129.62	$122.15	NA	$127.74	$87.99	$128.36	NA	$44.06	NA
NRC - Disconnect Charge - Add'l	UDL56	$64.25	$27.42	NA	$27.90	$44.24	$64.35	NA	$13.55	NA
NRC - Service Order submitted Electronically, per LSR	SOMEC	$3.50	$2.75	$3.50	$3.50	$3.50	$3.50	$3.50	$3.50	$3.50
NRC - Setvice Order submitted Electronically, per LSR - Disconnect	SOMEC	NA	$0.42	NA	NA	NA	NA	NA	NA	TBD

BELLSOUTH/API RATES
NETWORK ELEMENTS
AND OTHER SERVICES

DESCRIPTION	USOC	RATES BY STATE								
		AL	FL	GA	KY	LA	MS	NC	SC	TN
NRC - Service Order submitted Manually, per LSR	SOMAN	NA	$21.56	NA	$29.24	NA	NA	NA	NA	$19.99
NRC - Service Order submitted Manually, per LSR, Disconnect	SOMAN	NA	$3.84	NA	$3.94	NA	NA	NA	NA	TBD
NRC - Incremental Charge - Manual Service Order - 1st	SOMAN	$27.37	NA	$18.94	NA	$18.14	$25.52	$26.94	NA	NA
NRC - Incremental Charge - Manual Service Order - Add'l	SOMAN	$12.97	NA	$8.42	NA	$8.06	$11.34	$12.76	NA	NA
NRC - Incremental Charge - Manual Service Order - Disconnect	SOMAN	$17.77	NA	NA	NA	$11.41	$16.06	NA	NA	NA
NRC - Incremental Charge - Order Coordination - Time Specific (per LSR)	OCOSL	$45.99	$36.18	$34.22	$36.18	$32.77	$45.27	$45.34	$45.43	$55.00
4-Wire 64 Kbps Dig Grade Loop										
RC - Statewide, per month	UDL64	NA	NA	NA	NA	NA	NA	$32.67	$41.70	$42.23
RC - Zone 1, per month (Note 2)	UDL64	$27.33	$39.08	$25.75	$35.92	$27.50	$25.61	TBD	$34.26	$36.45
RC - Zone 2, per month (Note 2)	UDL64	$44.40	$57.21	$29.74	$40.32	$47.24	$33.94	TBD	$51.67	$45.87
RC - Zone 3, per month (Note 2)	UDL64	$80.45	$126.22	$47.27	$37.90	$96.48	$48.51	TBD	$68.43	$65.75
RC - Zone 4, per month (Note 2)	UDL64	NA	NA	NA	NA	NA	$64.02	NA	NA	NA
NRC - 1st	UDL64	$498.05	$654.72	$348.55	$258.62	$333.28	$489.00	$489.04	$602.73	$643.00
NRC - Add'l	UDL64	$343.70	$428.45	$241.20	$176.11	$230.50	$337.93	$337.51	$393.50	$421.26
NRC - Disconnect Charge - 1st	UDL64	$129.62	$122.15	NA	$127.74	$87.99	$128.36	NA	$44.06	NA
NRC - Disconnect Charge - Add'l	UDL64	$64.25	$27.42	NA	$27.90	$44.24	$64.35	NA	$13.55	NA
NRC - Service Order submitted Electronically, per LSR	SOMEC	$3.50	$2.75	$3.50	$3.50	$3.50	$3.50	$3.50	$3.50	$3.50
NRC - Setvice Order submitted Electronically, per LSR - Disconnect	SOMEC	NA	$0.42	NA	NA	NA	NA	NA	NA	NA
NRC - Service Order submitted Manually, per LSR	SOMAN	NA	$21.56	NA	$29.24	NA	NA	NA	NA	$19.99
NRC - Service Order submitted Manually, per LSR, Disconnect	SOMAN	NA	$3.84	NA	$3.94	NA	NA	NA	NA	NA
NRC - Incremental Charge - Manual Service Order - 1st	SOMAN	$27.37	NA	$18.94	NA	$18.14	$25.52	$26.94	NA	NA
NRC - Incremental Charge - Manual Service Order - Add'l	SOMAN	$12.97	NA	$8.42	NA	$8.06	$11.34	$12.76	NA	NA
NRC - Incremental Charge - Manual Service Order - Disconnect	SOMAN	$17.77	NA	NA	NA	$11.41	$16.06	NA	NA	NA
NRC - Incremental Charge - Order Coordination - Time Specific (per LSR)	OCOSL	$45.99	$36.18	$34.22	$36.18	$32.77	$45.27	$45.34	$45.43	$55.00
2-Wire Unb Copper Loop/Short(< or = 18kft), incl Man SI & Fac Res*										
RC - Statewide, per month	UCLPB	$15.11	NA	$13.97	NA	NA	NA	NA	$20.81	NA
RC - Zone 1, per month (Note 2)	UCLPB	TBD	$18.60	$19.80	$14.94	$16.34	$16.85	$12.27	$18.90	$19.85
RC - Zone 2, per month (Note 2)	UCLPB	TBD	$27.23	$22.86	$15.15	$17.99	$22.34	$20.63	$28.50	$24.98
RC - Zone 3, per month (Note 2)	UCLPB	TBD	$60.07	$36.34	$15.73	$18.83	$31.92	$23.88	$37.75	$35.81
RC - Zone 4, per month (Note 2)	UCLPB	NA	NA	NA	NA	NA	$42.13	NA	NA	NA
NRC - 1st	UCLPB	$514.21	$389.84	$395.16	$391.93	$386.13	$504.82	$450.00	$600.61	$270.01
NRC - Add'l	UCLPB	$464.58	$251.26	$217.39	$251.98	$246.38	$456.24	$390.00	$507.33	$234.63
NRC - Disconnect Charge - 1st	UCLPB	TBD	$154.23	$142.27	$160.06	$159.29	$105.86	NA	NA	$74.54
NRC - Disconnect Charge - Add'l	UCLPB	TBD	$35.23	$37.86	$36.20	$36.02	$57.25	NA	NA	$39.14
NRC - Service Order submitted Electronically, per LSR	SOMEC	$3.50	$2.75	$3.50	$3.50	$3.50	$3.50	$3.50	$3.50	$3.50
NRC - Setvice Order submitted Electronically, per LSR - Disconnect	SOMEC	NA	$0.42	NA	NA	NA	NA	NA	NA	NA
NRC - Service Order submitted Manually, per LSR	SOMAN	NA	$21.56	NA	$29.24	NA	NA	NA	NA	$19.99
NRC - Service Order submitted Manually, per LSR, Disconnect	SOMAN	NA	$3.84	NA	$3.94	NA	NA	NA	NA	NA
NRC - Incremental Charge - Manual Service Order - 1st	SOMAN	$47.00	NA	$18.94	NA	$18.14	$25.52	$26.94	$47.00	NA
NRC - Incremental Charge - Manual Service Order - Add'l	SOMAN	$21.00	NA	$8.42	NA	$8.06	$11.34	$12.76	$25.52	NA
NRC - Incremental Charge - Manual Service Order - Disconnect - 1st	SOMAN	$17.77	NA	$142.27	NA	$11.41	$16.06	NA	$21.00	NA
NRC - Incremental Charge - Manual Service Order - Disconnect - Add'l	SOMAN	$17.77	NA	$37.86	NA	$11.41	$16.06	NA	$21.00	NA
NRC - Incremental Charge - Manual Order Coordination - per loop	UCLMC	$16.00	$16.31	$36.46	$16.31	$32.77	$45.27	$16.00	$45.43	$34.29
2-Wire Unb Copper Loop/Short (< or = 18kft), without Man SI & Fac Res										
RC - Statewide, per moth	UCLPW	NA	NA	NA	NA	NA	NA	NA	$20.81	NA
Zone 1, per month	UCLPW	TBD	$18.60	$11.90	$14.94	$16.34	$16.85	$12.27	$18.90	$19.85
Zone 2, per month	UCLPW	TBD	$27.23	$13.74	$15.15	$17.99	$22.34	$20.63	$28.50	$24.98
Zone 3, per month	UCLPW	TBD	$60.07	$21.83	$15.73	$18.83	$31.92	$23.88	$37.75	$35.81

BELLSOUTH/API RATES
NETWORK ELEMENTS
AND OTHER SERVICES

		RATES BY STATE								
DESCRIPTION	**USOC**	**AL**	**FL**	**GA**	**KY**	**LA**	**MS**	**NC**	**SC**	**TN**
Zone 4, per month	UCLPW	NA	NA	NA	NA	NA	$42.13	NA	NA	NA
NRC - 1st	UCLPW	$375.21	$257.00	$154.13	$259.09	$253.48	$365.82	$311.00	$461.61	$131.01
NRC - Add'l	UCLPW	$325.58	$173.62	$139.75	$174.35	$168.86	$317.24	$251.00	$368.33	$95.63
NRC - Disconnect Charge - 1st	UCLPW	TBD	$108.29	$140.73	$112.86	$112.32	$105.86	NA	NA	$74.54
NRC - Disconnect Charge - Add'l	UCLPW	TBD	$15.46	$37.45	$15.88	$15.81	$57.25	NA	NA	$39.14
NRC - Service Order submitted Electronically, per LSR	SOMEC	$3.50	$2.75	$3.50	$3.50	$3.50	$3.50	$3.50	$3.50	$3.50
NRC - Setvice Order submitted Electronically, per LSR - Disconnect	SOMEC	NA	$0.42	NA	NA	NA	NA	NA	NA	NA
NRC - Service Order submitted Manually, per LSR	SOMAN	NA	$21.56	NA	$29.24	NA	NA	NA	NA	$19.99
NRC - Service Order submitted Manually, per LSR, Disconnect	SOMAN	NA	$3.84	NA	$3.94	NA	NA	NA	NA	NA
NRC - Incremental Charge - Manual Service Order - 1st	SOMAN	$47.00	NA	NA	NA	$18.14	$25.52	$26.94	$47.00	NA
NRC - Incremental Charge - Manual Service Order - Add'l	SOMAN	$21.00	NA	NA	NA	$8.06	$11.34	$12.76	$25.52	NA
NRC - Incremental Charge - Manual Service Order - Disconnect - 1st	SOMAN	$17.77	NA	NA	NA	$11.41	$16.06	NA	$21.00	NA
NRC - Incremental Charge - Manual Service Order - Disconnect - Add'l	SOMAN	$17.77	NA	NA	NA	$11.41	$16.06	NA	$21.00	NA
NRC - Incremental Charge - Manual Order Coordination - per loop	UCLMC	$16.00	$16.31	$36.46	$16.31	$32.77	$45.27	$16.00	$45.43	$34.29
2-Wire Unb Copper Loop/Long (> 18kft), incl Man SI & Fac Res										
RC - Statewide, per month	UCL2L	$40.00	NA	$41.61	NA	NA	NA	NA	NA	NA
RC - Zone 1, per month (Note 2)	UCL2L	TBD	$48.79	$19.80	$36.19	$43.92	$16.85	$38.66	$18.90	$19.85
RC - Zone 2, per month (Note 2)	UCL2L	TBD	$58.13	$22.86	$49.31	$59.76	$22.34	$64.03	$28.50	$24.98
RC - Zone 3, per month (Note 2)	UCL2L	TBD	$71.17	$36.34	$80.78	$104.74	$31.92	$73.89	$37.75	$35.81
RC - Zone 4, per month (Note 2)	UCL2L	NA	NA	NA	NA	NA	$42.13	NA	NA	NA
NRC - 1st	UCL2L	$514.21	$331.86	$395.16	$333.21	$332.73	$504.82	$450.00	$600.61	$270.01
NRC - Add'l	UCL2L	$464.58	$193.27	$217.39	$193.26	$192.99	$456.24	$390.00	$507.33	$234.63
NRC - Disconnect Charge - 1st	UCL2L	NA	$154.23	$142.27	$160.06	$159.29	$105.86	NA	NA	$74.54
NRC - Disconnect Charge - Add'l	UCL2L	NA	NA	$37.86	$36.20	$36.02	$57.25	NA	NA	$39.14
NRC - Service Order submitted Electronically, per LSR	SOMEC	$3.50	$2.75	$3.50	$3.50	$3.50	$3.50	$3.50	$3.50	$3.50
NRC - Setvice Order submitted Electronically, per LSR - Disconnect	SOMEC	NA	$0.42	NA	NA	NA	NA	NA	NA	TBD
NRC - Service Order submitted Manually, per LSR	SOMAN	NA	$21.56	NA	$29.24	NA	NA	NA	NA	$19.99
NRC - Service Order submitted Manually, per LSR, Disconnect	SOMAN	NA	$3.84	NA	$3.94	NA	NA	NA	NA	TBD
NRC - Incremental Charge - Manual Service Order - 1st	SOMAN	$47.00	NA	$18.94	$47.00	$18.14	$25.52	$26.94	$47.00	NA
NRC - Incremental Charge - Manual Service Order - Add'l	SOMAN	$21.00	NA	$8.42	NA	$8.06	$11.34	$12.76	$25.52	NA
NRC - Incremental Charge - Manual Service Order - Disconnect - 1st	SOMAN	$17.77	NA	$142.27	NA	$11.41	$16.06	NA	$21.00	NA
NRC - Incremental Charge - Manual Service Order - Disconnect - Add'L	SOMAN	$17.77	NA	$37.86	NA	$11.41	$16.06	NA	$21.00	NA
NRC - Incremental Charge - Manual Order Coordination - per loop	UCLMC	$16.00	$16.31	$36.46	$16.31	$32.77	$45.27	$16.00	$45.43	$34.29
2-Wire Unb Copper Loop/Long (> 18kft), without Man SI & Fac Res										
RC - Statewide, per month	UCL2W	$40.00	NA	$37.00	NA	NA	NA	NA	NA	NA
Zone 1, per month	UCL2W	TBD	$48.79	TBD	$36.19	$43.92	$16.85	$38.66	$18.90	$19.85
Zone 2, per month	UCL2W	TBD	$58.13	TBD	$49.31	$59.76	$22.34	$64.03	$28.50	$24.98
Zone 3, per month	UCL2W	TBD	$71.17	TBD	$80.78	$104.74	$31.92	$73.89	$37.75	$35.81
Zone 4, per month	UCL2W	NA	NA	NA	NA	NA	$42.13	NA	NA	NA
NRC - 1st	UCL2W	$375.21	$199.01	$154.13	$200.37	$200.08	$365.82	$311.00	$461.61	$131.01
NRC - Add'l	UCL2W	$325.58	$115.63	$139.75	$115.63	$115.46	$317.24	$251.00	$368.33	$95.63
NRC - Disconnect Charge - 1st	UCL2W	NA	$108.29	TBD	$112.86	$112.32	$105.86	NA	NA	$74.54
NRC - Disconnect Charge - Add'l	UCL2W	NA	$15.46	TBD	$15.88	$15.81	$57.25	NA	NA	$39.14
NRC - Service Order submitted Electronically, per LSR	SOMEC	$3.50	$2.75	$3.50	$3.50	$3.50	$3.50	$3.50	$3.50	$3.50
NRC - Setvice Order submitted Electronically, per LSR - Disconnect	SOMEC	NA	$0.42	NA	NA	NA	NA	NA	NA	NA
NRC - Service Order submitted Manually, per LSR	SOMAN	NA	$21.56	NA	$29.24	NA	NA	NA	NA	$19.99

BELLSOUTH/API RATES
NETWORK ELEMENTS
AND OTHER SERVICES

DESCRIPTION	USOC	RATES BY STATE AL	FL	GA	KY	LA	MS	NC	SC	TN
NRC - Service Order submitted Manually, per LSR, Disconnect	SOMAN	NA	$3.84	NA	$3.94	NA	NA	NA	NA	NA
NRC - Incremental Charge - Manual Service Order - 1st	SOMAN	$47.00	NA	TBD	NA	$18.14	$25.52	$26.94	$47.00	NA
NRC - Incremental Charge - Manual Service Order - Add'l	SOMAN	$21.00	NA	TBD	NA	$8.06	$11.34	$12.76	$25.52	NA
NRC - Incremental Charge - Manual Service Order - Disconnect - 1st	SOMAN	$17.77	NA	TBD	NA	$11.41	$16.06	NA	$21.00	NA
NRC - Incremental Charge - Manual Service Order - Disconnect - Add'L	SOMAN	$17.77	NA	TBD	NA	$11.41	$16.06	NA	$21.00	NA
NRC - Incremental Charge - Manual Order Coordination - per loop	UCLMC	$16.00	$16.31	$36.46	$16.31	$32.77	$45.27	$16.00	$45.43	$34.29
4-Wire Unb Copper Loop/Short (< or = 18kft), incl Man SI & Fac Res										
Statewide, per month*	UCL4S	TBD	NA	$19.34	NA	NA	NA	NA	NA	NA
Zone 1, per month	UCL4S	TBD	$25.56	$16.65	$25.26	$29.14	$25.00	$18.49	$25.00	$25.00
Zone 2, per month	UCL4S	TBD	$30.53	$19.22	$23.00	$26.62	$27.50	$29.75	$27.50	$27.50
Zone 3, per month	UCL4S	TBD	$32.24	$30.55	$19.08	$28.75	$30.00	$34.14	$30.00	$30.00
Zone 4, per month	UCL4S	NA	NA	NA	NA	NA	$35.00	NA	NA	NA
NRC - 1st	UCL4S	TBD	$438.27	$353.80	$440.35	$434.49	$400.00	$400.00	$400.00	$400.00
NRC - Add'l	UCL4S	TBD	$299.68	$162.61	$300.41	$294.74	$300.00	$300.00	$300.00	$300.00
NRC - Disconnect Charge - 1st	UCL4S	TBD	$161.19	$156.25	$171.58	$174.43	$150.00	$150.00	$150.00	$150.00
NRC - Disconnect Charge - Add'l	UCL4S	TBD	$39.76	$41.96	$41.90	$42.60	$40.00	$40.00	$40.00	$40.00
NRC - Service Order submitted Electronically, per LSR	SOMEC	$3.50	$2.75	$3.50	$3.50	$3.50	$3.50	$3.50	$3.50	$3.50
NRC - Setvice Order submitted Electronically, per LSR - Disconnect	SOMEC	NA	$0.42	NA	NA	NA	NA	NA	NA	NA
NRC - Service Order submitted Manually, per LSR	SOMAN	NA	$21.56	NA	$29.24	NA	NA	NA	NA	$19.99
NRC - Service Order submitted Manually, per LSR, Disconnect	SOMAN	NA	$3.84	NA	$3.94	NA	NA	NA	NA	NA
NRC - Incremental Charge - Manual Service Order - 1st	SOMAN	TBD	NA	NA	NA	$18.14	$25.52	$26.94	$47.00	NA
NRC - Incremental Charge - Manual Service Order - Add'l	SOMAN	TBD	NA	NA	NA	$8.06	$11.34	$12.76	$25.52	NA
NRC - Incremental Charge - Manual Service Order - Disconnect	SOMAN	TBD	NA	NA	NA	$11.41	$16.06	NA	$21.00	NA
NRC - Incremental Charge - Manual Service Order - Disconnect - Add'L	SOMAN				NA	$11.41	$16.06	NA	$21.00	NA
NRC - Incremental Charge - Manual Order Coordination - per loop	UCLMC	TBD	$16.31	$36.46	$16.31	$32.77	$45.27	$16.00	$45.43	$34.29
4-Wire Unb Copper Loop/Short (< or = 18kft), without Man SI & Fac Res										
RC - Statewide, per month	UCL4W	TBD	NA	$19.34	NA	NA	NA	NA	NA	NA
Zone 1, per month	UCL4W	TBD	$25.56	$16.65	$25.26	$29.14	$25.00	$18.49	$25.00	$25.00
Zone 2, per month	UCL4W	TBD	$30.53	$19.22	$23.00	$26.62	$27.50	$29.75	$27.50	$27.50
Zone 3, per month	UCL4W	TBD	$32.24	$30.55	$19.08	$28.75	$30.00	$34.14	$30.00	$30.00
Zone 4, per month	UCL4W	NA	NA	NA	NA	NA	$35.00	NA	NA	NA
NRC - 1st	UCL4W	TBD	$305.43	$214.80	$307.51	$301.83	$261.00	$261.00	$261.00	$261.00
NRC - Add'l	UCL4W	TBD	$222.05	$162.61	$222.77	$217.22	$161.00	$161.00	$161.00	$161.00
NRC - Disconnect Charge - 1st	UCL4W	TBD	$114.30	$156.25	$122.17	$124.19	$150.00	$150.00	$150.00	$150.00
NRC - Disconnect Charge - Add'l	UCL4W	TBD	$19.58	$41.96	$20.64	$20.98	$40.00	$40.00	$40.00	$40.00
NRC - Service Order submitted Electronically, per LSR	SOMEC	$3.50	$2.75	$3.50	$3.50	$3.50	$3.50	$3.50	$3.50	$3.50
NRC - Setvice Order submitted Electronically, per LSR - Disconnect	SOMEC	NA	$0.42	NA	NA	NA	NA	NA	NA	NA
NRC - Service Order submitted Manually, per LSR	SOMAN	NA	$21.56	NA	$29.24	NA	NA	NA	NA	$19.99
NRC - Service Order submitted Manually, per LSR, Disconnect	SOMAN	NA	$3.84	NA	$3.94	NA	NA	NA	NA	NA
NRC - Incremental Charge - Manual Service Order - 1st	SOMAN	TBD	NA	NA	NA	$18.14	$25.52	$26.94	$47.00	NA
NRC - Incremental Charge - Manual Service Order - Add'l	SOMAN	TBD	NA	NA	NA	$8.06	$11.34	$12.76	$25.52	NA
NRC - Incremental Charge - Manual Service Order - Disconnect	SOMAN	TBD	NA	NA	NA	$11.41	$16.06	NA	$21.00	NA
NRC - Incremental Charge - Manual Service Order - Disconnect - Add'L	SOMAN		NA		NA	$11.41	$16.06	NA	$21.00	NA
NRC - Incremental Charge - Manual Order Coordination - per loop	UCLMC	TBD	$16.31	$36.46	$16.31	$32.77	$45.27	$16.00	$45.43	$34.29
4-Wire Unb Copper Loop/Long (>18kft), incl Man Svc Inq & Fac Res										
Statewide, Per month	UCL4L	TBD	NA	$55.86	NA	NA	NA	NA	NA	NA
Zone 1, per month	UCL4L	TBD	$82.70	$47.56	$61.02	$77.94	$50.00	$54.54	$50.00	$50.00

BELLSOUTH/API RATES
NETWORK ELEMENTS
AND OTHER SERVICES

		RATES BY STATE								
DESCRIPTION	**USOC**	**AL**	**FL**	**GA**	**KY**	**LA**	**MS**	**NC**	**SC**	**TN**
Zone 2, per month	UCL4L	TBD	$119.02	$54.92	$55.74	$115.84	$60.00	$90.93	$60.00	$60.00
Zone 3, per month	UCL4L	TBD	$147.54	$87.30	$88.97	$143.00	$90.00	$105.09	$90.00	$90.00
Zone 4, per month	UCL4L	NA	NA	NA	NA	NA	TBD	NA	NA	NA
NRC - 1st	UCL4L	TBD	$380.29	$397.06	$381.63	$381.09	$400.00	$400.00	$400.00	$400.00
NRC - Add'l	UCL4L	TBD	$241.70	$227.88	$241.69	$241.35	$300.00	$300.00	$300.00	$300.00
NRC - Disconnect Charge - 1st	UCL4L	TBD	$161.19	$156.25	$171.58	$174.43	$150.00	$150.00	$150.00	$150.00
NRC - Disconnect Charge - Add'l	UCL4L	TBD	$39.76	$41.96	$41.90	$42.60	$40.00	$40.00	$40.00	$40.00
NRC - Service Order submitted Electronically, per LSR	SOMEC	$3.50	$2.75	$3.50	$3.50	$3.50	$3.50	$3.50	$3.50	$3.50
NRC - Setvice Order submitted Electronically, per LSR - Disconnect	SOMEC	NA	$0.42	NA	NA	NA	NA	NA	NA	NA
NRC - Service Order submitted Manually, per LSR	SOMAN	NA	$21.56	NA	$29.24	NA	NA	NA	NA	$19.99
NRC - Service Order submitted Manually, per LSR, Disconnect	SOMAN	NA	$3.84	NA	$3.94	NA	NA	NA	NA	NA
NRC - Incremental Charge - Manual Service Order - 1st	SOMAN	TBD	NA	NA	NA	$18.14	$25.52	$26.94	$47.00	NA
NRC - Incremental Charge - Manual Service Order - Add'l	SOMAN	TBD	NA	NA	NA	$8.06	$11.34	$12.76	$25.52	NA
NRC - Incremental Charge - Manual Service Order - Disconnect	SOMAN	TBD	NA	NA	NA	$11.41	$16.06	NA	$21.00	NA
NRC - Incremental Charge - Manual Service Order - Disconnect - Add'L	SOMAN		NA		NA	$11.41	$16.06	NA	$21.00	NA
NRC - Incremental Charge - Manual Order Coordination - per loop	UCLMC	TBD	$16.31	$36.46	$16.31	$32.77	$45.27	$16.00	$45.43	$34.29
4-Wire Unb Copper Loop/Long (>18kft), without Man SI & Fac Res										
Statewide, Per month	UCL4O	TBD	NA	$55.86	NA	NA	NA	NA	NA	NA
Zone 1, per month	UCL4O	TBD	$82.70	$47.56	$61.02	$77.94	$50.00	$54.54	$50.00	$50.00
Zone 2, per month	UCL4O	TBD	$119.02	$54.92	$55.74	$115.84	$60.00	$90.93	$60.00	$60.00
Zone 3, per month	UCL4O	TBD	$147.54	$87.30	$88.97	$143.00	$90.00	$105.09	$90.00	$90.00
Zone 4, per month	UCL4O	NA	NA	NA	NA	NA	TBD	NA	NA	NA
NRC - 1st	UCL4O	TBD	$247.44	$397.06	$248.79	$248.44	$261.00	$261.00	$261.00	$261.00
NRC - Add'l	UCL4O	TBD	$164.06	$227.88	$164.05	$163.82	$161.00	$161.00	$161.00	$161.00
NRC - Disconnect Charge - 1st	UCL4O	TBD	$114.30	$156.25	$122.17	$124.19	$150.00	$150.00	$150.00	$150.00
NRC - Disconnect Charge - Add'l	UCL4O	TBD	$19.58	$41.96	$20.64	$20.98	$40.00	$40.00	$40.00	$40.00
NRC - Service Order submitted Electronically, per LSR	SOMEC	$3.50	$2.75	$3.50	$3.50	$3.50	$3.50	$3.50	$3.50	$4.50
NRC - Setvice Order submitted Electronically, per LSR - Disconnect	SOMEC	NA	$0.42	NA	NA	NA	NA	NA	NA	NA
NRC - Service Order submitted Manually, per LSR	SOMAN	NA	$21.56	NA	$29.24	NA	NA	NA	NA	$19.99
NRC - Service Order submitted Manually, per LSR, Disconnect	SOMAN	NA	$3.84	NA	$3.94	NA	NA	NA	NA	NA
NRC - Incremental Charge - Manual Service Order - 1st	SOMAN	TBD	NA	NA	NA	$18.14	$25.52	$26.94	$47.00	NA
NRC - Incremental Charge - Manual Service Order - Add'l	SOMAN	TBD	NA	NA	NA	$8.06	$11.34	$12.76	$25.52	NA
NRC - Incremental Charge - Manual Service Order - Disconnect	SOMAN	TBD	NA	NA	NA	$11.41	$16.06	NA	$21.00	NA
NRC - Incremental Charge - Manual Service Order - Disconnect - Add'L	SOMAN		NA	NA	NA	$11.41	$16.06	NA	$21.00	NA
NRC - Incremental Charge - Manual Order Coordination - per loop	UCLMC	TBD	$16.31	$36.46	$16.31	$32.77	$45.27	$16.00	$45.43	$34.29
DS3 Local Loop										
DS3 Unbundled Local Loop - per mile	1L5ND	$10.85	$11.77	$8.90	$43.69	$11.26	$54.39	$32.53	$15.53	$30.53
DS3 Unbundled Local Loop- per Facility Termination	UE3PX	$419.65	$404.58	$390.34	$436.95	$439.59	$427.81	$387.01	$421.60	$400.21
NRC - Facility Termination - 1st	UE3PX	$640.54	$903.37	$639.50	$1,091.00	$594.70	$975.22	$964.04	$735.42	$726.16
NRC - Facility Termination - Add'l	UE3PX	$426.82	$528.05	$426.40	$661.23	$396.54	$549.17	$542.73	$519.31	$411.64
NRC - Facility Termination - Disconnect - 1st	UE3PX	$121.72	$221.46	$122.31	NA	$102.16	$134.07	NA	NA	$103.36
NRC - Facility Termination - Disconnect - Add'l	UE3PX	$118.54	$154.90	$119.14	NA	$99.46	$130.59	NA	NA	$100.59
NRC - Manual Svc Order, per LSR	SOMAN	NA	$21.56	NA	$19.99	NA	NA	NA	NA	$19.99
NRC - Manual Svc Order, per LSR disconnect	SOMAN	NA	$3.84	NA	NA	NA	NA	NA	NA	NA
NRC - Electronic Svc Order, per LSR	SOMEC	$3.50	$2.75	$3.50	$3.50	$3.50	$3.50	$3.50	$3.50	$3.50
NRC - Electronic Svc Order, per LSR disconnect	SOMEC	NA	$0.42	NA	NA	NA	NA	NA	NA	NA
NRC - Incremental Charge--Manual Svc Order - 1st	SOMAN	$38.48	NA	$37.55	$50.25	$34.92	$68.62	$29.76	$54.26	NA

BELLSOUTH/API RATES
NETWORK ELEMENTS
AND OTHER SERVICES

		RATES BY STATE								
DESCRIPTION	**USOC**	**AL**	**FL**	**GA**	**KY**	**LA**	**MS**	**NC**	**SC**	**TN**
NRC - Incremental Charge--Manual Svc Order - Add'l	SOMAN	$38.48	NA	$37.55	$50.25	$34.92	$68.62	$29.76	$54.26	NA
NRC - Incremental Cost - Manual Svc. Order vs. Elect-Disconnect-1st	SOMAN	$19.03	NA	$18.03	$20.94	$20.94	$28.59	NA	NA	NA
NRC - Incremental Cost - Manual Svc. Order vs. Elect-Disconnect-Add'l	SOMAN	$19.03	NA	$18.03	$20.94	$20.94	$28.59	NA	NA	NA
STS-1 Local Loop										
STS-1 Unbundled Local Loop - per mile	1L5ND	$10.85	$11.77	$8.90	$43.69	$38.98	$54.39	$32.53	$15.53	$30.53
STS-1 Unbundled Local Loop- per Facility Termination	UDLS1	$419.65	$446.09	$421.59	$436.95	$497.08	$427.81	$387.01	$431.32	$400.21
NRC - STS-1 - Facility Termination - 1st	UDLS1	$640.54	$903.37	$639.50	$1,091	$709.14	$975.22	$964.04	$735.42	$726.16
NRC - STS-1 - Facility Termination - Add'l	UDLS1	$426.82	$528.05	$426.40	$661.23	$402.63	$549.17	$542.73	$519.31	$411.64
NRC - STS-1 - Facility Termination - Disconnect - 1st	UDLS1	$121.72	$221.46	$122.31	NA	$102.16	$134.07	NA	NA	$103.36
NRC - STS-1 - Facility Termination - Disconnect - Add'l	UDLS1	$118.54	$154.90	$119.14	NA	$99.46	$130.59	NA	NA	$100.59
NRC - Manual Svc Order, per LSR	SOMAN	NA	$21.56	NA	$19.99	NA	NA	NA	NA	$19.99
NRC - Manual Svc Order, per LSR disconnect	SOMAN	NA	$3.84	NA	NA	NA	NA	NA	NA	NA
NRC - Electronic Svc Order, per LSR	SOMEC	$3.50	$2.75	$3.50	$3.50	$3.50	$3.50	$3.50	$3.50	$3.50
NRC - Electronic Svc Order, per LSR disconnect	SOMEC	NA	$0.42	NA	NA	NA	NA	NA	NA	NA
NRC - STS-1 - Incremental Charge--Manual Svc Order - 1st	SOMAN	$38.48	NA	$37.55	$93.12	$50.25	$68.62	$29.76	$54.26	NA
NRC - STS-1 - Incremental Charge--Manual Svc Order - Add'l	SOMAN	$38.48	NA	$37.55	$93.12	$50.25	$68.62	$29.76	$54.26	NA
NRC - STS-1 - Incremental Cost - Manual Svc. Order vs. Elect-Disconnect-1st	SOMAN	$19.03	NA	$18.03	NA	$20.94	$28.59	NA	NA	NA
NRC - STS-1 - Incremental Cost - Manual Svc. Order vs. Elect-Disconnect-Add'l	SOMAN	$19.03	NA	$18.03	NA	$20.94	$28.59	NA	NA	NA
OC3- Local Loop										
Local Loop - OC3 - per Mile	1L5ND	$8.23	$8.93	$6.75	$33.15	$29.58	$41.27	$24.69	$11.78	$23.16
Local Loop - OC3 - per Facility Termination		$691.33	$648.60	$630.21	$713.29	$753.65	$689.68	$611.36	$701.71	$620.20
NRC - OC3 - Facility Termination - 1st		$949.63	$966.45	$947.69	$1,543	$1,025	$1,427	$1,411	$1,044	$1,050
NRC - OC3 - Facility Termination - Add'l		$413.38	$408.85	$413.00	$661.23	$402.63	$549.17	$542.73	$505.88	$411.64
NRC - OC3 - Facility Termination - Disconnect - 1st		$121.72	$11.56	$122.31	NA	$102.16	$134.07	$131.65	NA	$103.36
NRC - OC3 - Facility Termination - Disconnect - Add'l		$118.54	$108.34	$119.14	NA	$99.46	$130.59	$128.19	NA	$100.59
NRC - Manual Svc Order, per LSR	SOMAN	NA	$21.56	NA	$19.99	NA	NA	NA	NA	$19.99
NRC - Manual Svc Order, per LSR disconnect	SOMAN	NA	$3.84	NA	NA	NA	NA	NA	NA	NA
NRC - Electronic Svc Order, per LSR	SOMEC	$3.50	$2.75	$3.50	$3.50	$3.50	$3.50	$3.50	$3.50	$3.50
NRC - Electronic Svc Order, per LSR disconnect	SOMEC	NA	$0.42	NA	NA	NA	NA	NA	NA	NA
NRC - OC3 - Incremental Charge--Manual Svc Order - 1st	SOMAN	$38.48	NA	$37.55	$93.12	$50.25	$68.62	$69.34	$54.26	NA
NRC - OC3 - Incremental Charge--Manual Svc Order - Add'l	SOMAN	$38.48	NA	$37.55	$93.12	$50.25	$68.62	$69.34	$54.26	NA
NRC - OC3 -Incremental Cost - Manual Svc. Order vs. Elect-Disconnect-1st	SOMAN	$19.03	NA	$18.03	NA	$20.94	$28.59	$29.76	NA	NA
NRC - OC3 -Incremental Cost - Manual Svc. Order vs. Elect-Disconnect-Add'l	SOMAN	$19.03	NA	$18.03	NA	$20.94	$28.59	$29.76	NA	NA
OC -12 Local Loop										
Local Loop - OC12 - per Mile	1L5ND	$10.13	$10.99	$8.31	$40.80	$36.40	$50.79	$30.38	$14.50	$28.51
Local Loop - OC12 - per Facility Termination		$2,557	$2,053.06	$2,109.00	$2,457	$2,571	$2,371	$2,122	$2,663	$2,079
NRC - OC12 - Facility Termination - 1st		$1,165	$1,183.46	$1,162.00	$1,858	$1,245	$1,742	$1,722	$1,259	$1,276
NRC - OC12 - Facility Termination - Add'l		$413.38	$408.85	$413.00	$661.23	$402.63	$549.17	$542.73	$505.88	$411.64
NRC - OC12 - Facility Termination - Disconnect - 1st		$121.72	$111.56	$122.31	NA	$102.16	$134.07	$131.65	NA	$103.36
NRC - OC12 - Facility Termination - Disconnect - Add'l		$118.54	$108.34	$119.14	NA	$99.46	$130.59	$128.19	NA	$100.59
NRC - Manual Svc Order, per LSR	SOMAN	NA	$21.56	NA	$19.99	NA	NA	NA	NA	$19.99
NRC - Manual Svc Order, per LSR disconnect	SOMAN	NA	$3.84	NA	NA	NA	NA	NA	NA	NA
NRC - Electronic Svc Order, per LSR	SOMEC	$3.50	$2.75	$3.50	$3.50	$3.50	$3.50	$3.50	$3.50	$3.50
NRC - Electronic Svc Order, per LSR disconnect	SOMEC	NA	$0.42	NA	NA	NA	NA	NA	NA	NA
NRC -OC12 - Incremental Charge - Manual Svc Order - 1st	SOMAN	$38.48	NA	$37.55	$93.12	$50.25	$68.62	$68.62	$54.26	NA
NRC - OC12 - Incremental Charge - Manual Svc Order - Add'l	SOMAN	$38.48	NA	$37.55	$93.12	$50.25	$68.62	$68.62	$54.26	NA
NRC - OC12 - Incremental Cost-Manual Svc. Order vs. Elect-Disconnect-1st	SOMAN	$19.03	NA	$18.03	NA	$20.94	$28.59	$28.59	NA	NA
NRC - OC12 - Incremental Cost-Manual Svc. Order vs. Elect-Disconnect-Add'l	SOMAN	$19.03	NA	$18.03	NA	$20.94	$28.59	$28.59	NA	NA
OC - 48 Local Loop										
Local Loop - OC48 - per Mile	1L5ND	$33.22	$36.04	$27.25	$133.84	$119.40	$166.59	$120.02	$47.57	$93.50
Local Loop - OC48 - per Facility Termination		$1,713	$1,685.97	$1,598.00	$2,129	$2,268	$1,753	$1,677	$1,733	$1,832
Local Loop - OC12 interface on OC48 Facility		$736.71	$587.71	$594.80	$725.77	$723.29	$667.00	$582.66	$773.40	$570.54

BELLSOUTH/API RATES
NETWORK ELEMENTS
AND OTHER SERVICES

		RATES BY STATE								
DESCRIPTION	**USOC**	**AL**	**FL**	**GA**	**KY**	**LA**	**MS**	**NC**	**SC**	**TN**
NRC - OC48 - Facility Termination - 1st		$1,165	$1,183.46	$1,162.00	$1,858	$1,245	$1,742	$1,722	$1,259	$1,276
NRC - OC48 - Facility Termination - Add'l		$413.38	$408.85	$413.00	$661.23	$402.63	$549.17	$542.73	$505.88	$411.64
NRC - OC48 - Interface OC12 on OC48 - 1st		$121.72	$543.72	$539.36	$844.21	$532.13	$729.04	$720.81	$635.04	$544.55
NRC - OC48 - Interface OC12 on OC48 - Add'l		$118.54	$312.05	$317.38	$516.89	$304.90	$404.94	$400.38	$410.02	$311.39
NRC - OC48 - Facility Termination - Disconnect - 1st		$121.72	$111.56	$122.31	NA	$102.16	$134.07	$131.65	NA	$103.36
NRC - OC48 - Facility Termination - Disconnect - Add'l		$118.54	$108.34	$119.14	NA	$99.46	$130.59	$128.19	NA	$100.59
NRC - OC48- Interface OC12 on OC48 - Disconnect - 1st		$121.72	$111.56	$122.31	NA	$102.16	$134.07	$131.65	NA	$103.36
NRC - OC48 - Interface OC12 on OC48 - Disconnect - Add'l		$118.54	$108.34	$119.14	NA	$99.46	$130.59	$128.19	NA	$100.59
NRC - Manual Svc Order, per LSR	SOMAN	NA	$21.56	NA	$19.99	NA	NA	NA	NA	$19.99
NRC - Manual Svc Order, per LSR disconnect	SOMAN	NA	$3.84	NA	NA	NA	NA	NA	NA	NA
NRC - Electronic Svc Order, per LSR	SOMEC	$3.50	$2.75	$3.50	$3.50	$3.50	$3.50	$3.50	$3.50	$3.50
NRC - Electronic Svc Order, per LSR disconnect	SOMEC	NA	$0.42	NA	NA	NA	NA	NA	NA	NA
NRC - OC48 - Facility Termination-Manual Svc Order vs Electronic-Disconnect-1s	SOMAN	$19.03	NA	$18.03	$93.12	$20.94	$28.59	NA	NA	NA
NRC - OC48 - Facility Termination-Manual Svc Order vs Electronic-Disconnect-Ad	SOMAN	$19.03	NA	$18.03	$93.12	$20.94	$28.59	NA	NA	NA
NRC - OC48 - Interface - Manual Svc Order vs Electronic-Disconnect-1st	SOMAN	$19.03	NA	$18.03	NA	$20.94	$28.59	NA	NA	NA
NRC - OC48 - Interface - Manual Svc Order vs Electronic-Disconnect-Add'l	SOMAN	$19.03	NA	$18.03	NA	$20.94	$28.59	NA	NA	NA
NRC - OC-48 - Incremental Charge--Manual Svc Order-1st	SOMAN	$38.48	NA	$37.55	$93.12	$50.25	$68.62	$69.34	$54.26	NA
NRC - OC-48 - Incremental Charge--Manual Svc Order-Add'l	SOMAN	$38.48	NA	$37.55	$93.12	$50.25	$68.62	$69.34	$54.26	NA
NRC - OC48 - Interface OC12 on OC48 - Incremental Charge--Manual Svc Order	SOMAN	$38.48	NA	$37.55	NA	$50.25	$68.62	$69.34	NA	NA
NRC - OC48 - Interface OC12 on OC48 - Incremental Charge--Manual Svc Order	SOMAN	$38.48	NA	$37.55	NA	$50.25	$68.62	$69.34	NA	NA
Unbundled Loop Modification/Conditioning										
NRC - Load Coil/Equipment Removal per 2 Wire pair - Loops less than or equal to 18kft **	ULM2L	$65.23	$65.40	$69.28	$65.40	$65.30	$80.55	$65.49	$65.20	$65.40
NRC - Load Coil/Equipment Removal per 2 Wire pair - Loops greater than 18kft - 1st **	ULM2G	$716.70	$710.71	$757.04	$710.73	$709.71	$880.00	$719.55	$716.32	$710.71
NRC - Load Coil/Equipment Removal per 2 Wire pair - Loops greater than 18kft - Add'l **	ULM2G	$23.55	$23.77	$23.49	$23.77	$23.74	$27.30	$23.65	$23.54	$23.77
NRC - Load Coil/Equipment Removal per 4 Wire pair - Loops less than or equal to 18kft **	ULM4L	$65.23	$65.40	$69.28	$65.40	$65.30	$80.55	$65.49	$65.20	$65.40
NRC - Load Coil/Equipment Removal per 4 Wire pair - Loops greater than 18kft - 1st **	ULM4G	$716.70	$710.71	$757.04	$710.73	$709.71	$880.00	$719.55	$716.32	$710.71
NRC - Load Coil/Equipment Removal per 4 Wire pair - Loops greater than 18kft - Add'l **	ULM4G	$23.55	$23.77	$23.49	$23.77	$23.74	$27.30	$23.65	$23.54	$23.77
NRC - Bridge Tap Removal per pair unloaded **	ULMBT	$65.28	$65.44	$79.99	$65.44	$65.35	$121.14	$65.64	$65.24	$65.44
UNBUNDLED SUB-LOOPS										
SUB-LOOP DISTRIBUTION										
Cross-Box Set-Up										
NRC - Set-Up per Cross Box location in the field - CLEC Feeder Facility set-up	USBSA	$517.43	$711.78	$421.08	$627.16	$639.68	TBD	$498.09	$510.15	TBD
NRC - Set-Up per Cross Box location in the field - per 25 pair panel set-up	USBSB	$44.87	$45.28	$67.10	$45.28	$45.22	TBD	$45.04	$44.84	TBD
NRC - Set-Up per Building Equipment Room - CLEC Feeder Facility set-up	USBSC	$311.77	$333.44	$394.74	$407.02	$289.90	TBD	$313.01	$311.60	$314.09
NRC - Set-Up per Building Equipment Room - per 25 pair panel set-up	USBSD	$107.63	$109.85	$154.57	$111.55	$104.26	TBD	$108.06	$108.17	$119.07
Loop Distribution per 2-Wire Analog VG Sub-Loop, per month	USBN2	$9.05	NA	$9.12	NA	NA	TBD	NA	$8.34	TBD
Zone 1, per month	USBN2	TBD	$9.36	TBD	$9.03	$10.33	TBD	$7.99	NA	TBD
Zone 2, per month	USBN2	TBD	$12.49	TBD	$12.25	$14.43	TBD	$12.63	NA	TBD
Zone 3, per month	USBN2	TBD	$16.13	TBD	$16.71	$21.11	TBD	$14.43	NA	TBD
Zone 4, per month	USBN2	NA	NA	NA	NA	NA	TBD	NA	NA	NA
NRC - 1st	USBN2	$125.53	$139.20	$207.01	$139.19	$138.99	TBD	$126.03	$195.98	TBD
NRC - Add'l	USBN2	$54.32	$61.94	$171.32	$61.93	$61.84	TBD	$54.54	$63.70	TBD
NRC - Disconnect Charge - 1st	USBN2	$92.45	$98.49	TBD	$101.18	$100.70	TBD	$71.13	NA	TBD
NRC - Disconnect Charge - Add'l	USBN2	$13.21	$13.08	TBD	$13.44	$13.37	TBD	$10.16	NA	TBD

BELLSOUTH/API RATES
NETWORK ELEMENTS
AND OTHER SERVICES

		RATES BY STATE								
DESCRIPTION	**USOC**	**AL**	**FL**	**GA**	**KY**	**LA**	**MS**	**NC**	**SC**	**TN**
NRC - Service Order submitted Electronically, per LSR	SOMEC	$3.50	$2.75	$3.50	$3.50	$3.50	TBD	$3.50	$3.50	TBD
NRC - Setvice Order submitted Electronically, per LSR - Disconnect	SOMEC	NA	$0.42	NA	NA	NA	TBD	NA	NA	TBD
NRC - Service Order submitted Manually, per LSR	SOMAN	NA	$21.56	NA	$29.24	NA	TBD	NA	NA	TBD
NRC - Service Order submitted Manually, per LSR, Disconnect	SOMAN	NA	$3.84	NA	$3.94	NA	TBD	NA	NA	TBD
NRC - Incremental Charge - Manual Service Order - 1st	SOMAN	TBD	NA	$18.94	NA	$18.14	TBD	$26.94	NA	TBD
NRC - Incremental Charge - Manual Service Order - Add'l	SOMAN	TBD	NA	$8.42	NA	$8.06	TBD	$12.76	NA	TBD
NRC - Incremental Charge - Manual Service Order - Disconnect	SOMAN	TBD	NA	TBD	NA	$11.41	TBD	$15.12	NA	TBD
NRC - Incremental Charge - Manual Order Coordination - per loop	USBMC	$51.29	$16.31	$34.22	$16.31	$16.29	TBD	$45.34	$45.43	TBD
Loop Distribution per 4-Wire Analog VG Sub-Loop, per month	USBN4	$10.56	NA	$8.32	NA	NA	TBD	NA	$10.22	NA
Zone 1, per month	USBN4	TBD	$10.12	TBD	$10.18	$15.67	TBD	$9.23	NA	TBD
Zone 2, per month	USBN4	TBD	$18.29	TBD	$9.44	$20.35	TBD	$14.63	NA	TBD
Zone 3, per month	USBN4	TBD	$26.09	TBD	$13.38	$24.93	TBD	$16.73	NA	TBD
Zone 4, per month	USBN4	NA	NA	NA	NA	NA	TBD	NA	NA	TBD
NRC - 1st	USBN4	$155.90	$165.68	$219.35	$165.67	$165.43	TBD	$156.52	$232.76	TBD
NRC - Add'l	USBN4	$79.35	$88.42	$72.99	$88.41	$88.29	TBD	$79.66	$91.92	TBD
NRC - Disconnect Charge - 1st	USBN4	$107.24	$104.31	$123.72	$109.94	$111.76	TBD	$78.56	NA	TBD
NRC - Disconnect Charge - Add'l	USBN4	$18.46	$17.15	$28.77	$18.08	$18.38	TBD	$13.53	NA	TBD
NRC - Service Order submitted Electronically, per LSR	SOMEC	$3.50	$2.75	$3.50	$3.50	$3.50	TBD	$3.50	$3.50	
NRC - Setvice Order submitted Electronically, per LSR - Disconnect	SOMEC	NA	$0.42	NA	NA	NA	TBD	NA	NA	
NRC - Service Order submitted Manually, per LSR	SOMAN	NA	$21.56	NA	$29.24	NA	TBD	NA	NA	
NRC - Service Order submitted Manually, per LSR, Disconnect	SOMAN	NA	$3.84	NA	$3.94	NA	TBD	NA	NA	
NRC - Incremental Charge - Manual Service Order - 1st	SOMAN	TBD	NA	NA	NA	$18.14	TBD	NA	NA	TBD
NRC - Incremental Charge - Manual Service Order - Add'l	SOMAN	TBD	NA	NA	NA	$8.06	TBD	NA	NA	TBD
NRC - Incremental Charge - Manual Service Order - Disconnect	SOMAN	TBD	NA	NA	NA	$11.41	TBD	NA	TBD	TBD
NRC - Incremental Charge - Manual Order Coordination - per loop	USBMC	$51.29	$16.31	$34.22	$16.31	$16.29	TBD	$45.34	$45.43	TBD
Loop Distribution per 2 Wire Unbundled Copper Sub-Loop, per month	UCS2X	$6.55	NA	TBD	NA	NA	TBD	NA	$6.82	NA
Zone 1, per month	UCS2X	TBD	$7.91	TBD	$8.01	$8.72	TBD	$7.33	NA	TBD
Zone 2, per month	UCS2X	TBD	$10.37	TBD	$9.18	$11.43	TBD	$10.95	NA	TBD
Zone 3, per month	UCS2X	TBD	$12.76	TBD	$11.02	$14.08	TBD	$12.36	NA	TBD
Zone 4, per month	UCS2X	NA	NA	NA	NA	NA	TBD	NA	NA	TBD
NRC - 1st	UCS2X	$136.55	$139.20	TBD	$139.19	$138.99	TBD	$137.10	$212.46	TBD
NRC - Add'l	UCS2X	$60.00	$61.94	TBD	$61.93	$61.84	TBD	$60.24	$70.03	TBD
NRC - Disconnect Charge - 1st	UCS2X	$99.54	$98.49	TBD	$101.18	$100.70	TBD	$76.58	NA	TBD
NRC - Disconnect Charge - Add'l	UCS2X	$14.05	$13.08	TBD	$13.44	$13.37	TBD	$10.81	NA	TBD
NRC - Service Order submitted Electronically, per LSR	SOMEC	$3.50	$2.75	$3.50	$3.50	$3.50	TBD	$3.50	$3.50	TBD
NRC - Setvice Order submitted Electronically, per LSR - Disconnect	SOMEC	NA	$0.42	NA	NA	NA	TBD	NA	NA	TBD
NRC - Service Order submitted Manually, per LSR	SOMAN	NA	$21.56	NA	$29.24	NA	TBD	NA	NA	TBD
NRC - Service Order submitted Manually, per LSR, Disconnect	SOMAN	NA	$3.84	NA	$3.94	NA	TBD	NA	NA	TBD
NRC - Incremental Charge - Manual Service Order - 1st	SOMAN	TBD	NA	TBD	NA	$18.14	TBD	NA	NA	TBD
NRC - Incremental Charge - Manual Service Order - Add'l	SOMAN	TBD	NA	TBD	NA	$8.06	TBD	NA	NA	TBD
NRC - Incremental Charge - Manual Service Order - Disconnect	SOMAN	TBD	NA	TBD	NA	$11.41	TBD	NA	NA	TBD
NRC - Incremental Charge - Manual Order Coordination - per loop	USBMC	$51.29	$16.31	TBD	$16.31	$16.29	TBD	$45.34	$45.43	TBD
Loop Distribution per 4 Wire Unbundled Copper Sub-Loop, per month	UCS4X	$8.06	NA	TBD	NA	NA	TBD	NA	$8.86	NA
Zone 1, per month	UCS4X	TBD	$7.11	TBD	$10.65	$10.48	TBD	$7.14	NA	TBD
Zone 2, per month	UCS4X	TBD	$11.26	TBD	$9.71	$13.52	TBD	$11.09	NA	TBD
Zone 3, per month	UCS4X	TBD	$16.92	TBD	$8.45	$17.66	TBD	$12.63	NA	TBD
Zone 4, per month	UCS4X	NA	NA	NA	NA	NA	TBD	NA	NA	TBD
NRC - 1st	UCS4X	$161.59	$165.68	TBD	$165.67	$165.43	TBD	$162.24	$238.46	TBD
NRC - Add'l	UCS4X	$85.04	$88.42	TBD	$88.41	$88.29	TBD	$85.38	$97.61	TBD
NRC - Disconnect Charge - 1st	UCS4X	$107.24	$104.31	TBD	$109.94	$111.76	TBD	$78.56	NA	TBD
NRC - Disconnect Charge - Add'l	UCS4X	$18.46	$17.15	TBD	$18.08	$18.38	TBD	$13.53	NA	TBD
NRC - Service Order submitted Electronically, per LSR	SOMEC	$3.50	$2.75	$3.50	$3.50	$3.50	TBD	$3.50	$3.50	TBD

BELLSOUTH/API RATES
NETWORK ELEMENTS
AND OTHER SERVICES

DESCRIPTION	USOC	RATES BY STATE								
		AL	FL	GA	KY	LA	MS	NC	SC	TN
NRC - Setvice Order submitted Electronically, per LSR - Disconnect	SOMEC	NA	$0.42	NA	NA	NA	TBD	NA	NA	TBD
NRC - Service Order submitted Manually, per LSR	SOMAN	NA	$21.56	NA	$29.24	NA	TBD	NA	NA	TBD
NRC - Service Order submitted Manually, per LSR, Disconnect	SOMAN	NA	$3.84	NA	$3.94	NA	TBD	NA	NA	TBD
NRC - Incremental Charge - Manual Service Order - 1st	SOMAN	TBD	NA	TBD	NA	$18.14	TBD	NA	NA	TBD
NRC - Incremental Charge - Manual Service Order - Add'l	SOMAN	TBD	NA	TBD	NA	$8.06	TBD	NA	NA	TBD
NRC - Incremental Charge - Manual Service Order - Disconnect	SOMAN	TBD	NA	TBD	NA	$11.41	TBD	NA	NA	TBD
NRC - Incremental Charge - Manual Order Coordination - per loop	USBMC	$51.29	$16.31	TBD	$16.31	$16.29	TBD	$45.34	$45.43	TBD
Sub-Loop-Intrabldg Ntwk Cable (aka riser cable), 2W analog, per mo	USBR2	$1.33	$3.87	$1.61	$3.23	$1.59	TBD	$3.50	$1.60	$1.47
NRC - 1st	USBR2	$113.60	$113.62	$137.03	$113.61	$106.11	TBD	$114.05	$189.52	$150.35
NRC - Add'l	USBR2	$50.44	$36.36	$41.59	$36.35	$35.12	TBD	$37.20	$47.09	$45.63
NRC - Disconnect Charge - 1st	USBR2	$99.54	$98.49	$115.85	$101.18	$93.19	TBD	$76.58	NA	$128.85
NRC - Disconnect Charge - Add'l	USBR2	$14.05	$13.08	$19.17	$13.44	$13.92	TBD	$10.81	NA	$21.32
NRC - Service Order submitted Electronically, per LSR	SOMEC	$3.50	$2.75	$3.50	$3.50	$3.50	TBD	$3.50	$3.50	$3.50
NRC - Setvice Order submitted Electronically, per LSR - Disconnect	SOMEC	NA	$0.42	NA	NA	NA	TBD	NA	NA	TBD
NRC - Service Order submitted Manually, per LSR	SOMAN	NA	$21.56	NA	$29.24	NA	TBD	NA	NA	$19.99
NRC - Service Order submitted Manually, per LSR, Disconnect	SOMAN	NA	$3.84	NA	$3.94	NA	TBD	NA	NA	TBD
NRC - Incremental Charge - Manual Service Order - 1st	SOMAN	TBD	NA	NA	NA	$18.14	TBD	NA	NA	NA
NRC - Incremental Charge - Manual Service Order - Add'l	SOMAN	TBD	NA	NA	NA	$8.06	TBD	NA	NA	NA
NRC - Incremental Charge - Manual Service Order - Disconnect	SOMAN	TBD	NA	NA	NA	$11.41	TBD	NA	NA	NA
NRC - Incremental Charge - Manual Order Coordination - per loop	USBMC	$51.29	$16.31	$34.22	$16.31	$16.29	TBD	$45.34	$45.43	$55.00
Sub-Loop-Intrabldg Ntwk Cable (aka riser cable), 4W analog, per mo	USBR4	$2.17	$7.20	$2.96	$6.29	$2.83	TBD	$3.75	$2.78	$2.55
NRC - 1st	USBR4	$127.17	$126.10	$176.46	$126.10	$118.69	TBD	$127.67	$204.20	$193.62
NRC - Add'l	USBR4	$50.62	$48.84	$55.11	$48.84	$47.70	TBD	$50.82	$60.40	$60.47
NRC - Disconnect Charge - 1st	USBR4	$107.45	$104.31	$122.17	$109.94	$101.65	TBD	$78.71	NA	$135.88
NRC - Disconnect Charge - Add'l	USBR4	$14.59	$17.15	$19.57	$18.08	$14.61	TBD	$10.69	NA	$21.76
NRC - Service Order submitted Electronically, per LSR	SOMEC	$3.50	$2.75	$3.50	$3.50	$3.50	TBD	$3.50	$3.50	$3.50
NRC - Setvice Order submitted Electronically, per LSR - Disconnect	SOMEC	NA	$0.42	NA	NA	NA	TBD	NA	NA	TBD
NRC - Service Order submitted Manually, per LSR	SOMAN	NA	$21.56	NA	$29.24	NA	TBD	NA	NA	$19.99
NRC - Service Order submitted Manually, per LSR, Disconnect	SOMAN	NA	$3.84	NA	$3.94	NA	TBD	NA	NA	TBD
NRC - Incremental Charge - Manual Service Order - 1st	SOMAN	TBD	NA	NA	NA	$18.14	TBD	NA	NA	NA
NRC - Incremental Charge - Manual Service Order - Add'l	SOMAN	TBD	NA	NA	NA	$8.06	TBD	NA	NA	NA
NRC - Incremental Charge - Manual Service Order - Disconnect	SOMAN	TBD	NA	NA	NA	$11.41	TBD	NA	NA	NA
NRC - Incremental Charge - Manual Order Coordination - per loop	USBMC	$51.29	$16.31	$34.22	$16.31	$16.29	TBD	$45.34	$45.43	$55.00
SUB-LOOP FEEDER										
Cross-Box Set-Up										
NRC - DS0 Set-Up per Cross Box location - CLEC Distribution Facility set-up	USBFW	517.43	711.78	$421.08	627.16	$639.68	TBD	498.09	510.15	TBD
NRC - DS0 Set-Up per Cross Box location - per 25 pair panel set-up	USBFX	44.87	45.28	$67.10	45.28	$45.22	TBD	45.04	44.84	TBD
NRC - DS1 Set-Up per Cross Box location - CLEC Distribution Facility set-up	USBFY	517.43	711.78	$421.08	627.16	$639.68	TBD	498.09	510.15	TBD
NRC - DS1 Set-Up per Cross Box location - per pair panel set-up	USBFZ	44.87	45.28	$67.10	45.28	$45.22	TBD	45.04	44.84	TBD
2-Wire Analog VG Ground-Start Unbundled Sub-Loop Feeder, per month	USBFA	$13.68	NA	$8.58	NA	NA	TBD	NA	$10.06	NA
Zone 1, per month	USBFA	TBD	$10.75	TBD	$10.36	$11.01	TBD	$8.92	NA	TBD
Zone 2, per month	USBFA	TBD	$11.57	TBD	$13.62	$13.36	TBD	$14.10	NA	TBD
Zone 3, per month	USBFA	TBD	$13.51	TBD	$19.69	$21.56	TBD	$16.11	NA	TBD
Zone 4, per month	USBFA	NA	NA	NA	NA	NA	NA	NA	NA	TBD
NRC - 1st	USBFA	$198.42	$193.62	$206.44	$192.57	$192.30	TBD	$122.52	$199.27	TBD
NRC - Add'l	USBFA	$116.66	$113.00	$170.05	$111.96	$111.80	TBD	$46.61	$60.33	TBD
NRC - Disconnect Charge - 1st	USBFA	$119.95	$116.59	TBD	$119.14	$118.57	TBD	$77.90	NA	TBD
NRC - Disconnect Charge - Add'l	USBFA	$27.04	$26.70	TBD	$26.79	$26.66	TBD	$14.68	NA	TBD

BELLSOUTH/API RATES
NETWORK ELEMENTS
AND OTHER SERVICES

		RATES BY STATE								
DESCRIPTION	**USOC**	**AL**	**FL**	**GA**	**KY**	**LA**	**MS**	**NC**	**SC**	**TN**
NRC - Service Order submitted Electronically, per LSR	SOMEC	$3.50	$2.75	$3.50	$3.50	$3.50	TBD	$3.50	$3.50	TBD
NRC - Setvice Order submitted Electronically, per LSR - Disconnect	SOMEC	NA	$0.42	NA	NA	NA	TBD	NA	NA	TBD
NRC - Service Order submitted Manually, per LSR	SOMAN	NA	$21.56	NA	$29.24	NA	TBD	NA	NA	TBD
NRC - Service Order submitted Manually, per LSR, Disconnect	SOMAN	NA	$3.84	NA	$3.94	NA	TBD	NA	NA	TBD
NRC - Incremental Charge - Manual Service Order - 1st	SOMAN	TBD	NA	$18.94	NA	$18.14	TBD	$26.94	NA	TBD
NRC - Incremental Charge - Manual Service Order - Add'l	SOMAN	TBD	NA	$8.42	NA	$8.06	TBD	$12.76	NA	TBD
NRC - Incremental Charge - Manual Service Order - Disconnect	SOMAN	TBD	NA	TBD	NA	$11.41	TBD	$15.12	NA	TBD
2-Wire Analog VG Loop-Start Unbundled Sub-Loop Feeder, per month	USBFB	$13.68	NA	$8.58	NA	NA	TBD	NA	$10.06	NA
Zone 1, per month	USBFB	TBD	$10.75	TBD	$10.36	$11.01	TBD	$8.92	NA	TBD
Zone 2, per month	USBFB	TBD	$11.57	TBD	$13.62	$13.36	TBD	$14.10	NA	TBD
Zone 3, per month	USBFB	TBD	$13.51	TBD	$19.69	$21.56	TBD	$16.11	NA	TBD
Zone 4, per month	USBFB	NA	NA	NA	NA	NA	TBD	NA	NA	TBD
NRC - 1st	USBFB	$198.42	$193.62	$206.44	$192.57	$192.30	TBD	$122.52	$199.27	TBD
NRC - Add'l	USBFB	$116.66	$113.00	$170.05	$111.96	$111.80	TBD	$46.61	$60.33	TBD
NRC - Disconnect Charge - 1st	USBFB	$119.95	$116.59	TBD	$119.14	$118.57	TBD	$77.90	NA	TBD
NRC - Disconnect Charge - Add'l	USBFB	$27.04	$26.70	TBD	$26.79	$26.66	TBD	$14.68	NA	TBD
NRC - Service Order submitted Electronically, per LSR	SOMEC	$3.50	$2.75	$3.50	$3.50	$3.50	TBD	$3.50	$3.50	TBD
NRC - Setvice Order submitted Electronically, per LSR - Disconnect	SOMEC	NA	$0.42	NA	NA	NA	TBD	NA	NA	TBD
NRC - Service Order submitted Manually, per LSR	SOMAN	NA	$21.56	NA	$29.24	NA	TBD	NA	NA	TBD
NRC - Service Order submitted Manually, per LSR, Disconnect	SOMAN	NA	$3.84	NA	$3.94	NA	TBD	NA	NA	TBD
NRC - Incremental Charge - Manual Service Order - 1st	SOMAN	TBD	NA	$18.94	NA	$18.14	TBD	$26.94	NA	TBD
NRC - Incremental Charge - Manual Service Order - Add'l	SOMAN	TBD	NA	$8.42	NA	$8.06	TBD	$12.76	NA	TBD
NRC - Incremental Charge - Manual Service Order - Disconnect	SOMAN	TBD	NA	TBD	NA	$11.41	TBD	$15.12	NA	TBD
2-Wire Analog VG Reverse Battery Unb Sub-Loop Feeder, per mo	USBFC	$13.68	NA	$8.58	NA	NA	TBD	NA	$10.06	NA
Zone 1, per month	USBFC	TBD	$10.75	TBD	$10.36	$11.01	TBD	$8.92	NA	TBD
Zone 2, per month	USBFC	TBD	$11.57	TBD	$13.62	$13.36	TBD	$14.10	NA	TBD
Zone 3, per month	USBFC	TBD	$13.51	TBD	$19.69	$21.56	TBD	$16.11	NA	TBD
Zone 4, per month	USBFC	NA	NA	NA	NA	NA	TBD	NA	NA	NA
NRC - 1st	USBFC	$198.42	$193.62	$206.44	$192.57	$192.30	TBD	$122.52	$199.27	TBD
NRC - Add'l	USBFC	$116.66	$113.00	$170.05	$111.96	$111.80	TBD	$46.61	$60.33	TBD
NRC - Disconnect Charge - 1st	USBFC	$119.95	$116.59	TBD	$119.14	$118.57	TBD	$77.90	NA	TBD
NRC - Disconnect Charge - Add'l	USBFC	$27.04	$26.70	TBD	$26.79	$26.66	TBD	$14.68	NA	TBD
NRC - Service Order submitted Electronically, per LSR	SOMEC	$3.50	$2.75	$3.50	$3.50	$3.50	TBD	$3.50	$3.50	TBD
NRC - Setvice Order submitted Electronically, per LSR - Disconnect	SOMEC	NA	$0.42	NA	NA	NA	TBD	NA	NA	TBD
NRC - Service Order submitted Manually, per LSR	SOMAN	NA	$21.56	NA	$29.24	NA	TBD	NA	NA	TBD
NRC - Service Order submitted Manually, per LSR, Disconnect	SOMAN	NA	$3.84	NA	$3.94	NA	TBD	NA	NA	TBD
NRC - Incremental Charge - Manual Service Order - 1st	SOMAN	TBD	NA	$18.94	NA	$18.14	TBD	$26.94	NA	TBD
NRC - Incremental Charge - Manual Service Order - Add'l	SOMAN	TBD	NA	$8.42	NA	$8.06	TBD	$12.76	NA	TBD
NRC - Incremental Charge - Manual Service Order - Disconnect	SOMAN	TBD	NA	TBD	NA	$11.41	TBD	$15.12	NA	TBD
4-Wire Analog VG Ground-Start Unbundled Sub-Loop Feeder, per month	USBFD	$24.94	NA	$19.91	NA	NA	NA	NA	$10.22	NA
Zone 1, per month	USBFD	TBD	$23.35	TBD	$30.69	$25.90	TBD	$21.91	NA	TBD
Zone 2, per month	USBFD	TBD	$27.94	TBD	$36.12	$27.00	TBD	$35.92	NA	TBD
Zone 3, per month	USBFD	TBD	$40.51	TBD	$22.90	$25.61	TBD	$41.37	NA	TBD
Zone 4, per month	USBFD	NA	NA	NA	NA	NA	TBD	NA	NA	NA
NRC - 1st	USBFD	$224.21	$222.74	$243.41	$221.19	$220.87	TBD	$226.36	$232.76	TBD
NRC - Add'l	USBFD	$142.45	$140.22	$81.32	$138.67	$138.47	TBD	$144.28	$91.92	TBD
NRC - Disconnect Charge - 1st	USBFD	$131.15	$127.64	$134.77	$133.53	$135.74	TBD	$96.50	NA	TBD
NRC - Disconnect Charge - Add'l	USBFD	$34.66	$32.91	$33.93	$33.69	$34.25	TBD	$25.82	NA	TBD
NRC - Service Order submitted Electronically, per LSR	SOMEC	$3.50	$2.75	$3.50	$3.50	$3.50	TBD	$3.50	$3.50	TBD

BELLSOUTH/API RATES
NETWORK ELEMENTS
AND OTHER SERVICES

		RATES BY STATE								
DESCRIPTION	**USOC**	**AL**	**FL**	**GA**	**KY**	**LA**	**MS**	**NC**	**SC**	**TN**
NRC - Setvice Order submitted Electronically, per LSR - Disconnect	SOMEC	NA	$0.42	NA	NA	NA	TBD	NA	NA	TBD
NRC - Service Order submitted Manually, per LSR	SOMAN	NA	$21.56	NA	$29.24	NA	TBD	NA	NA	TBD
NRC - Service Order submitted Manually, per LSR, Disconnect	SOMAN	NA	$3.84	NA	$3.94	NA	TBD	NA	NA	TBD
NRC - Incremental Charge - Manual Service Order - 1st	SOMAN	TBD	NA	NA	NA	$18.14	TBD	NA	NA	TBD
NRC - Incremental Charge - Manual Service Order - Add'l	SOMAN	TBD	NA	NA	NA	$8.06	TBD	NA	NA	TBD
NRC - Incremental Charge - Manual Service Order - Disconnect	SOMAN	TBD	NA	NA	NA	$11.41	TBD	NA	NA	TBD
4-Wire Analog VG Loop-Start Unbundled Sub-Loop Feeder, per month	USBFE	$24.94	NA	$19.91	NA	NA	TBD	NA	$10.22	NA
Zone 1, per month	USBFE	TBD	$23.35	TBD	$30.69	$25.90	TBD	$21.91	NA	TBD
Zone 2, per month	USBFE	TBD	$27.94	TBD	$36.12	$27.00	TBD	$35.92	NA	TBD
Zone 3, per month	USBFE	TBD	$40.51	TBD	$22.90	$25.61	TBD	$41.37	NA	TBD
Zone 4, per month	USBFE	NA	NA	NA	NA	NA	TBD	NA	NA	NA
NRC - 1st	USBFE	$224.21	$222.74	$243.41	$221.19	$220.87	TBD	$226.36	$232.76	TBD
NRC - Add'l	USBFE	$142.45	$140.22	$81.32	$138.67	$138.47	TBD	$144.28	$91.92	TBD
NRC - Disconnect Charge - 1st	USBFE	$131.15	$127.64	$134.77	$133.53	$135.74	TBD	$96.50	NA	TBD
NRC - Disconnect Charge - Add'l	USBFE	$34.66	$32.91	$33.93	$33.69	$34.25	TBD	$25.82	NA	TBD
NRC - Service Order submitted Electronically, per LSR	SOMEC	$3.50	$2.75	$3.50	$3.50	$3.50	TBD	$3.50	$3.50	TBD
NRC - Setvice Order submitted Electronically, per LSR - Disconnect	SOMEC	NA	$0.42	NA	NA	NA	TBD	NA	NA	TBD
NRC - Service Order submitted Manually, per LSR	SOMAN	NA	$21.56	NA	$29.24	NA	TBD	NA	NA	TBD
NRC - Service Order submitted Manually, per LSR, Disconnect	SOMAN	NA	$3.84	NA	$3.94	NA	TBD	NA	NA	TBD
NRC - Incremental Charge - Manual Service Order - 1st	SOMAN	TBD	NA	NA	NA	$18.14	TBD	NA	NA	TBD
NRC - Incremental Charge - Manual Service Order - Add'l	SOMAN	TBD	NA	NA	NA	$8.06	TBD	NA	NA	TBD
NRC - Incremental Charge - Manual Service Order - Disconnect	SOMAN	TBD	NA	NA	NA	$11.41	TBD	NA	NA	TBD
2-Wire ISDN Unbundled Sub-Loop Feeder, per month	USBFF	$23.66	NA	$17.73	NA	NA	NA	NA	$24.33	NA
Zone 1, per month	USBFF	TBD	$22.39	TBD	$17.75	$19.34	TBD	$19.63	NA	TBD
Zone 2, per month	USBFF	TBD	$25.85	TBD	$23.67	$24.09	TBD	$31.61	NA	TBD
Zone 3, per month	USBFF	TBD	$26.12	TBD	$29.90	$32.27	TBD	36,27	NA	TBD
Zone 4, per month	USBFF	NA	NA	NA	NA	NA	TBD	NA	NA	NA
NRC - 1st	USBFF	$200.26	$222.74	$208.50	$218.90	$218.59	TBD	$202.01	$293.73	TBD
NRC - Add'l	USBFF	$104.51	$140.22	$62.31	$136.39	$136.19	TBD	$105.88	$126.38	TBD
NRC - Disconnect Charge - 1st	USBFF	$119.95	$127.64	$119.68	$121.40	$120.82	TBD	$92.57	NA	TBD
NRC - Disconnect Charge - Add'l	USBFF	$27.04	$32.91	$29.58	$26.04	$25.91	TBD	$21.09	NA	TBD
NRC - Service Order submitted Electronically, per LSR	SOMEC	$3.50	$2.75	$3.50	$3.50	$3.50	TBD	$3.50	$3.50	TBD
NRC - Setvice Order submitted Electronically, per LSR - Disconnect	SOMEC	NA	$0.42	NA	NA	NA	TBD	NA	NA	TBD
NRC - Service Order submitted Manually, per LSR	SOMAN	NA	$21.56	NA	$29.24	NA	TBD	NA	NA	TBD
NRC - Service Order submitted Manually, per LSR, Disconnect	SOMAN	NA	$3.84	NA	$3.94	NA	TBD	NA	NA	TBD
NRC - Incremental Charge - Manual Service Order - 1st	SOMAN	TBD	NA	NA	NA	$18.14	TBD	NA	NA	TBD
NRC - Incremental Charge - Manual Service Order - Add'l	SOMAN	TBD	NA	NA	NA	$8.06	TBD	NA	NA	TBD
NRC - Incremental Charge - Manual Service Order - Disconnect	SOMAN	TBD	NA	NA	NA	$11.41	TBD	NA	NA	TBD
4-Wire DSI Unbundled Sub-Loop Feeder, per month	USBFG	$49.54	NA	TBD	NA	NA	NA	NA	NA	NA
Zone 1, per month	USBFG	TBD	$56.00	TBD	$74.60	$64.67	TBD	$39.69	TBD	TBD
Zone 2, per month	USBFG	TBD	$80.13	TBD	$104.09	$92.67	TBD	$67.36	TBD	TBD
Zone 3, per month	USBFG	TBD	$156.12	TBD	$151.77	$309.79	TBD	$78.12	TBD	TBD
Zone 4, per month	USBFG	NA	NA	NA	NA	NA	TBD	NA	NA	NA
NRC - 1st	USBFG	$272.55	$211.55	TBD	$209.62	$209.47	TBD	$393.01	TBD	TBD
NRC - Add'l	USBFG	$133.92	$129.04	TBD	$127.11	$127.07	TBD	$153.37	TBD	TBD
NRC - Disconnect Charge - 1st	USBFG	$155.15	$127.78	TBD	$133.43	$135.74	TBD	NA	TBD	TBD
NRC - Disconnect Charge - Add'l	USBFG	$24.59	$33.06	TBD	$33.59	$34.25	TBD	NA	TBD	TBD
NRC - Service Order submitted Electronically, per LSR	SOMEC	$3.50	$2.75	$3.50	$3.50	$3.50	TBD	$3.50	$3.50	TBD
NRC - Setvice Order submitted Electronically, per LSR - Disconnect	SOMEC	NA	$0.42	NA	NA	NA	TBD	NA	NA	TBD

BELLSOUTH/API RATES
NETWORK ELEMENTS
AND OTHER SERVICES

DESCRIPTION	USOC	RATES BY STATE								
		AL	FL	GA	KY	LA	MS	NC	SC	TN
NRC - Service Order submitted Manually, per LSR	SOMAN	NA	$21.56	NA	$29.24	NA	TBD	NA	NA	TBD
NRC - Service Order submitted Manually, per LSR, Disconnect	SOMAN	NA	$3.84	NA	$3.94	NA	TBD	NA	NA	TBD
NRC - Incremental Charge - Manual Service Order - 1st	SOMAN	TBD	NA	TBD	NA	$18.14	TBD	$42.19	TBD	TBD
NRC - Incremental Charge - Manual Service Order - Add'l	SOMAN	TBD	NA	TBD	NA	$8.06	TBD	$12.76	TBD	TBD
NRC - Incremental Charge - Manual Service Order - Disconnect	SOMAN	TBD	NA	TBD	NA	$11.41	TBD	NA	TBD	TBD
2-Wire Copper Unbundled Sub-Loop Feeder, per month	USBFH	$10.59	NA	NA	NA	NA	NA	NA	$10.78	NA
Zone 1, per month	USBFH	TBD	$11.01	TBD	$8.29	$8.81	TBD	$10.66	NA	TBD
Zone 2, per month	USBFH	TBD	$9.78	TBD	$7.30	$7.72	TBD	$16.44	NA	TBD
Zone 3, per month	USBFH	TBD	$7.83	TBD	$6.03	$5.93	TBD	$18.69	NA	TBD
Zone 4, per month	USBFH	NA	NA	NA	NA	$174.93	TBD	NA	NA	NA
NRC - 1st	USBFH	$172.20	$175.18	TBD	$175.18	$92.53	TBD	$172.89	$259.80	TBD
NRC - Add'l	USBFH	$90.45	$92.66	TBD	$92.66	$116.22	TBD	$90.81	$106.45	TBD
NRC - Disconnect Charge - 1st	USBFH	$114.73	$113.67	TBD	$116.78	$21.31	TBD	$88.27	NA	TBD
NRC - Disconnect Charge - Add'l	USBFH	$21.82	$20.84	TBD	$21.41	$21.13	TBD	$16.79	NA	TBD
NRC - Service Order submitted Electronically, per LSR	SOMEC	$3.50	$2.75	$3.50	$3.50	$3.50	TBD	$3.50	$3.50	TBD
NRC - Setvice Order submitted Electronically, per LSR - Disconnect	SOMEC	NA	$0.42	NA	NA	NA	TBD	NA	NA	TBD
NRC - Service Order submitted Manually, per LSR	SOMAN	NA	$21.56	NA	$29.24	NA	TBD	NA	NA	TBD
NRC - Service Order submitted Manually, per LSR, Disconnect	SOMAN	NA	$3.84	NA	$3.94	NA	TBD	NA	NA	TBD
NRC - Incremental Charge - Manual Service Order - 1st	SOMAN	TBD	NA	TBD	NA	$18.14	TBD	NA	NA	TBD
NRC - Incremental Charge - Manual Service Order - Add'l	SOMAN	TBD	NA	TBD	NA	$8.06	TBD	NA	NA	TBD
NRC - Incremental Charge - Manual Service Order - Disconnect	SOMAN	TBD	NA	TBD	NA	$11.41	TBD	NA	NA	TBD
NRC - Incremental Charge - Manual Order Coordination - per loop	USBMC	$51.29	$16.31	TBD	$16.31	$16.29	TBD	$45.34	$45.53	TBD
4-Wire Copper Unbundled Sub-Loop Feeder, per month	USBFJ	$15.01	NA	NA	NA	NA	NA	NA	$15.63	NA
Zone 1, per month	USBFJ	TBD	$20.59	TBD	$16.55	$20.58	TBD	$14.68	NA	TBD
Zone 2, per month	USBFJ	TBD	$21.48	TBD	$15.35	$14.96	TBD	$23.74	NA	TBD
Zone 3, per month	USBFJ	TBD	$17.70	TBD	$12.52	$13.15	TBD	$27.26	NA	TBD
Zone 4, per month	USBFJ	NA	NA	NA	NA	NA	TBD	NA	NA	NA
NRC - 1st	USBFJ	$206.32	$209.61	TBD	$209.61	$209.31	TBD	$207.14	$294.59	TBD
NRC - Add'l	USBFJ	$134.23	$127.09	TBD	$127.09	$126.91	TBD	$134.77	$152.62	TBD
NRC - Disconnect Charge - 1st	USBFJ	$123.01	$119.80	TBD	$126.27	$128.36	TBD	$90.12	NA	TBD
NRC - Disconnect Charge - Add'l	USBFJ	$26.53	$25.07	TBD	$26.43	$26.87	TBD	$19.44	NA	TBD
NRC - Service Order submitted Electronically, per LSR	SOMEC	$3.50	$2.75	$3.50	$3.50	$3.50	TBD	$3.50	$3.50	TBD
NRC - Setvice Order submitted Electronically, per LSR - Disconnect	SOMEC	NA	$0.42	NA	NA	NA	TBD	NA	NA	TBD
NRC - Service Order submitted Manually, per LSR	SOMAN	NA	$21.56	NA	$29.24	NA	TBD	NA	NA	TBD
NRC - Service Order submitted Manually, per LSR, Disconnect	SOMAN	NA	$3.84	NA	$3.94	NA	TBD	NA	NA	TBD
NRC - Incremental Charge - Manual Service Order - 1st	SOMAN	TBD	NA	TBD	NA	$18.14	TBD	NA	NA	TBD
NRC - Incremental Charge - Manual Service Order - Add'l	SOMAN	TBD	NA	TBD	NA	$8.06	TBD	NA	NA	TBD
NRC - Incremental Charge - Manual Service Order - Disconnect	SOMAN	TBD	NA	TBD	NA	$11.41	TBD	NA	NA	TBD
NRC - Incremental Charge - Manual Order Coordination - per loop	USBMC	$51.29	$16.31	TBD	$16.31	$16.29	TBD	$45.34	$45.43	TBD
4-Wire 2.4 KBPS Digital Unbundled Sub-Loop Feeder, per month	USBFK	$30.97	NA	NA	NA	NA	NA	NA	$32.47	NA
Zone 1, per month	USBFK	TBD	$24.89	TBD	$27.38	$27.16	TBD	$26.71	NA	TBD
Zone 2, per month	USBFK	TBD	$28.83	TBD	$33.41	$24.93	TBD	$44.07	NA	TBD
Zone 3, per month	USBFK	TBD	$29.16	TBD	$24.47	$25.05	TBD	$50.83	NA	TBD
Zone 4, per month	USBFK	NA	NA	NA	NA	NA	TBD	NA	NA	NA
NRC - 1st	USBFK	$212.90	$211.32	TBD	$209.77	$209.47	TBD	$215.00	$309.57	TBD
NRC - Add'l	USBFK	$131.14	$128.81	TBD	$127.26	$127.07	TBD	$132.92	$157.93	TBD
NRC - Disconnect Charge - 1st	USBFK	$131.15	$127.64	TBD	$133.53	$135.74	TBD	$96.50	NA	TBD
NRC - Disconnect Charge - Add'l	USBFK	$34.66	$32.91	TBD	$33.69	$34.25	TBD	$25.82	NA	TBD
NRC - Service Order submitted Electronically, per LSR	SOMEC	$3.50	$2.75	$3.50	$3.50	$3.50	TBD	$3.50	$3.50	TBD

BELLSOUTH/API RATES
NETWORK ELEMENTS
AND OTHER SERVICES

		RATES BY STATE								
DESCRIPTION	**USOC**	**AL**	**FL**	**GA**	**KY**	**LA**	**MS**	**NC**	**SC**	**TN**
NRC - Setvice Order submitted Electronically, per LSR - Disconnect	SOMEC	NA	$0.42	NA	NA	NA	TBD	NA	NA	TBD
NRC - Service Order submitted Manually, per LSR	SOMAN	NA	$21.56	NA	$29.24	NA	TBD	NA	NA	TBD
NRC - Service Order submitted Manually, per LSR, Disconnect	SOMAN	NA	$3.84	NA	$3.94	NA	TBD	NA	NA	TBD
NRC - Incremental Charge - Manual Service Order - 1st	SOMAN	TBD	NA	TBD	NA	$18.14	TBD	NA	NA	TBD
NRC - Incremental Charge - Manual Service Order - Add'l	SOMAN	TBD	NA	TBD	NA	$8.06	TBD	NA	NA	TBD
NRC - Incremental Charge - Manual Service Order - Disconnect	SOMAN	TBD	NA	TBD	NA	$11.41	TBD	NA	NA	TBD
4-Wire 4.8 KBPS Digital Unbundled Sub-Loop Feeder, per month	USBFL	$30.97	NA	NA	NA	NA	NA	NA	$32.47	NA
Zone 1, per month	USBFL	TBD	$24.89	TBD	$27.38	$27.16	TBD	$26.71	NA	TBD
Zone 2, per month	USBFL	TBD	$28.83	TBD	$33.41	$24.93	TBD	$44.07	NA	TBD
Zone 3, per month	USBFL	TBD	$29.16	TBD	$24.47	$25.05	TBD	$50.83	NA	TBD
Zone 4, per month	USBFL	NA	NA	NA	NA	NA	TBD	NA	NA	NA
NRC - 1st	USBFL	$212.90	$211.32	TBD	$209.77	$209.47	TBD	$215.00	$309.57	TBD
NRC - Add'l	USBFL	$131.14	$128.81	TBD	$127.26	$127.07	TBD	$132.92	$157.93	TBD
NRC - Disconnect Charge - 1st	USBFL	$131.15	$127.64	TBD	$133.53	$135.74	TBD	$96.50	NA	TBD
NRC - Disconnect Charge - Add'l	USBFL	$34.66	$32.91	TBD	$33.69	$34.25	TBD	$25.82	NA	TBD
NRC - Service Order submitted Electronically, per LSR	SOMEC	$3.50	$2.75	$3.50	$3.50	$3.50	TBD	$3.50	$3.50	TBD
NRC - Setvice Order submitted Electronically, per LSR - Disconnect	SOMEC	NA	$0.42	NA	NA	NA	TBD	NA	NA	TBD
NRC - Service Order submitted Manually, per LSR	SOMAN	NA	$21.56	NA	$29.24	NA	TBD	NA	NA	TBD
NRC - Service Order submitted Manually, per LSR, Disconnect	SOMAN	NA	$3.84	NA	$3.94	NA	TBD	NA	NA	TBD
NRC - Incremental Charge - Manual Service Order - 1st	SOMAN	TBD	NA	TBD	NA	$18.14	TBD	NA	NA	TBD
NRC - Incremental Charge - Manual Service Order - Add'l	SOMAN	TBD	NA	TBD	NA	$8.06	TBD	NA	NA	TBD
NRC - Incremental Charge - Manual Service Order - Disconnect	SOMAN	TBD	NA	TBD	NA	$11.41	TBD	NA	NA	TBD
4-Wire 9.6 KBPS Digital Unbundled Sub-Loop Feeder, per month	USBFM	$30.97	NA	NA	NA	NA	NA	NA	$32.47	NA
Zone 1, per month	USBFM	TBD	$24.89	TBD	$27.38	$27.16	TBD	$26.71	NA	TBD
Zone 2, per month	USBFM	TBD	$28.83	TBD	$33.41	$24.93	TBD	$44.07	NA	TBD
Zone 3, per month	USBFM	TBD	$29.16	TBD	$24.47	$25.05	TBD	$50.83	NA	TBD
Zone 4, per month	USBFM	NA	NA	NA	NA	NA	TBD	NA	NA	NA
NRC - 1st	USBFM	$212.90	$211.32	TBD	$209.77	$209.47	TBD	$215.00	$309.57	TBD
NRC - Add'l	USBFM	$131.14	$128.81	TBD	$127.26	$127.07	TBD	$132.92	$157.93	TBD
NRC - Disconnect Charge - 1st	USBFM	$131.15	$127.64	TBD	$133.53	$135.74	TBD	$96.50	NA	TBD
NRC - Disconnect Charge - Add'l	USBFM	$34.66	$32.91	TBD	$33.69	$34.25	TBD	$25.82	NA	TBD
NRC - Service Order submitted Electronically, per LSR	SOMEC	$3.50	$2.75	$3.50	$3.50	$3.50	TBD	$3.50	$3.50	TBD
NRC - Setvice Order submitted Electronically, per LSR - Disconnect	SOMEC	NA	$0.42	NA	NA	NA	TBD	NA	NA	TBD
NRC - Service Order submitted Manually, per LSR	SOMAN	NA	$21.56	NA	$29.24	NA	TBD	NA	NA	TBD
NRC - Service Order submitted Manually, per LSR, Disconnect	SOMAN	NA	$3.84	NA	$3.94	NA	TBD	NA	NA	TBD
NRC - Incremental Charge - Manual Service Order - 1st	SOMAN	TBD	NA	TBD	NA	$18.14	TBD	NA	NA	TBD
NRC - Incremental Charge - Manual Service Order - Add'l	SOMAN	TBD	NA	TBD	NA	$8.06	TBD	NA	NA	TBD
NRC - Incremental Charge - Manual Service Order - Disconnect	SOMAN	TBD	NA	TBD	NA	$11.41	TBD	NA	NA	TBD
4-Wire 19.2 KBPS Digital Unbundled Sub-Loop Feeder, per month	USBFN	$30.97	NA	NA	NA	NA	NA	NA	$32.47	NA
Zone 1, per month	USBFN	TBD	$24.89	TBD	$27.38	$27.16	TBD	$26.71	NA	TBD
Zone 2, per month	USBFN	TBD	$28.83	TBD	$33.41	$24.93	TBD	$44.07	NA	TBD
Zone 3, per month	USBFN	TBD	$29.16	TBD	$24.47	$25.05	TBD	$50.83	NA	TBD
Zone 4, per month	USBFN	NA	NA	NA	NA	NA	TBD	NA	NA	NA
NRC - 1st	USBFN	$212.90	$211.32	TBD	$209.77	$209.47	TBD	$215.00	$309.57	TBD
NRC - Add'l	USBFN	$131.14	$128.81	TBD	$127.26	$127.07	TBD	$132.92	$157.93	TBD
NRC - Disconnect Charge - 1st	USBFN	$131.15	$127.64	TBD	$133.53	$135.74	TBD	$96.50	NA	TBD
NRC - Disconnect Charge - Add'l	USBFN	$34.66	$32.91	TBD	$33.69	$34.25	TBD	$25.82	NA	TBD
NRC - Service Order submitted Electronically, per LSR	SOMEC	$3.50	$2.75	NA	$3.50	$3.50	TBD	$3.50	$3.50	TBD
NRC - Setvice Order submitted Electronically, per LSR - Disconnect	SOMEC	NA	$0.42	NA	NA	NA	TBD	NA	NA	TBD

BELLSOUTH/API RATES
NETWORK ELEMENTS
AND OTHER SERVICES

		RATES BY STATE								
DESCRIPTION	**USOC**	**AL**	**FL**	**GA**	**KY**	**LA**	**MS**	**NC**	**SC**	**TN**
NRC - Service Order submitted Manually, per LSR	SOMAN	NA	$21.56	NA	$29.24	NA	TBD	NA	NA	TBD
NRC - Service Order submitted Manually, per LSR, Disconnect	SOMAN	NA	$3.84	NA	$3.94	NA	TBD	NA	NA	TBD
NRC - Incremental Charge - Manual Service Order - 1st	SOMAN	TBD	NA	TBD	NA	$18.14	TBD	NA	NA	TBD
NRC - Incremental Charge - Manual Service Order - Add'l	SOMAN	TBD	NA	TBD	NA	$8.06	TBD	NA	NA	TBD
NRC - Incremental Charge - Manual Service Order - Disconnect	SOMAN	TBD	NA	TBD	NA	$11.41	TBD	NA	NA	TBD
4-Wire 56 KBPS Digital Unbundled Sub-Loop Feeder, per month	USBFO	$30.97	NA	NA	NA	NA	NA	NA	$32.47	NA
Zone 1, per month	USBFO	TBD	$24.89	TBD	$27.38	$27.16	TBD	$26.71	NA	TBD
Zone 2, per month	USBFO	TBD	$28.83	TBD	$33.41	$24.93	TBD	$44.07	NA	TBD
Zone 3, per month	USBFO	TBD	$29.16	TBD	$24.47	$25.05	TBD	$50.83	NA	TBD
Zone 4, per month	USBFO	NA	NA	NA	NA	NA	TBD	NA	NA	NA
NRC - 1st	USBFO	$212.90	$211.32	TBD	$209.77	$209.47	TBD	$215.00	$309.57	TBD
NRC - Add'l	USBFO	$131.14	$128.81	TBD	$127.26	$127.07	TBD	$132.92	$157.93	TBD
NRC - Disconnect Charge - 1st	USBFO	$131.15	$127.64	TBD	$133.53	$135.74	TBD	$96.50	NA	TBD
NRC - Disconnect Charge - Add'l	USBFO	$34.66	$32.91	TBD	$33.69	$34.25	TBD	$25.82	NA	TBD
NRC - Service Order submitted Electronically, per LSR	SOMEC	$3.50	$2.75	NA	$3.50	$3.50	TBD	$3.50	$3.50	TBD
NRC - Setvice Order submitted Electronically, per LSR - Disconnect	SOMEC	NA	$0.42	NA	NA	NA	TBD	NA	NA	TBD
NRC - Service Order submitted Manually, per LSR	SOMAN	NA	$21.56	NA	$29.24	NA	TBD	NA	NA	TBD
NRC - Service Order submitted Manually, per LSR, Disconnect	SOMAN	NA	$3.84	NA	$3.94	NA	TBD	NA	NA	TBD
NRC - Incremental Charge - Manual Service Order - 1st	SOMAN	TBD	NA	TBD	NA	$18.14	TBD	NA	NA	TBD
NRC - Incremental Charge - Manual Service Order - Add'l	SOMAN	TBD	NA	TBD	NA	$8.06	TBD	NA	NA	TBD
NRC - Incremental Charge - Manual Service Order - Disconnect	SOMAN	TBD	NA	TBD	NA	$11.41	TBD	NA	NA	TBD
4-Wire 64 KBPS Digital Unbundled Sub-Loop Feeder, per month	USBFP	$30.97	NA	NA	NA	NA	NA	NA	$32.47	NA
Zone 1, per month	USBFP	TBD	$24.89	TBD	$27.38	$27.16	TBD	$26.71	NA	TBD
Zone 2, per month	USBFP	TBD	$28.83	TBD	$33.41	$24.93	TBD	$44.07	NA	TBD
Zone 3, per month	USBFP	TBD	$29.16	TBD	$24.47	$25.05	TBD	$50.83	NA	TBD
Zone 4, per month	USBFP	NA	NA	NA	NA	NA	TBD	NA	NA	NA
NRC - 1st	USBFP	$212.90	$211.32	TBD	$209.77	$209.47	TBD	$215.00	$309.57	TBD
NRC - Add'l	USBFP	$131.14	$128.81	TBD	$127.26	$127.07	TBD	$132.92	$157.93	TBD
NRC - Disconnect Charge - 1st	USBFP	$131.15	$127.64	TBD	$133.53	$135.74	TBD	$96.50	NA	TBD
NRC - Disconnect Charge - Add'l	USBFP	$34.66	$32.91	TBD	$33.69	$34.25	TBD	$25.82	NA	TBD
NRC - Service Order submitted Electronically, per LSR	SOMEC	$3.50	$2.75	NA	$3.50	$3.50	TBD	$3.50	$3.50	TBD
NRC - Setvice Order submitted Electronically, per LSR - Disconnect	SOMEC	NA	$0.42	NA	NA	NA	TBD	NA	NA	TBD
NRC - Service Order submitted Manually, per LSR	SOMAN	NA	$21.56	NA	$29.24	$29.24	TBD	NA	NA	TBD
NRC - Service Order submitted Manually, per LSR, Disconnect	SOMAN	NA	$3.84	NA	$3.94	$3.94	TBD	NA	NA	TBD
NRC - Incremental Charge - Manual Service Order - 1st	SOMAN	TBD	NA	TBD	NA	$18.14	TBD	NA	NA	TBD
NRC - Incremental Charge - Manual Service Order - Add'l	SOMAN	TBD	NA	TBD	NA	$8.06	TBD	NA	NA	TBD
NRC - Incremental Charge - Manual Service Order - Disconnect	SOMAN	TBD	NA	TBD	NA	$11.41	TBD	NA	NA	TBD
Unbundled Sub-Loop Modification										
NRC - Load Coil/Equipment Removal per 2 Wire pair - 1st	ULM2X	$358.90	$357.81	TBD	$357.82	$332.79	TBD	$360.33	$358.71	TBD
NRC - Load Coil/Equipment Removal per 2 Wire pair - Add'l	ULM2X	$8.08	$8.15	TBD	$8.15	$7.49	TBD	$8.11	$8.07	TBD
NRC - Load Coil/Equipment Removal per 4 Wire pair - 1st	ULM4X	$358.90	$357.81	TBD	$357.82	$332.79	TBD	$360.33	$358.71	TBD
NRC - Load Coil/Equipment Removal per 4 Wire pair - Add'l	ULM4X	$8.08	$8.15	TBD	$8.15	$7.49	TBD	$8.11	$8.07	TBD
NRC - Bridge Tap Removal per pair unloaded - 1st	ULMBT	$561.91	$562.71	TBD	$562.73	$521.03	TBD	$564.15	$561.62	TBD
NRC - Bridge Tap Removal per pair unloaded - Add'l	ULMBT	$10.09	$10.19	TBD	$10.19	$9.36	TBD	$10.14	$8.07	TBD
Loop Make Up										
NRC - Loop Makeup - Preordering Without Reservation, per working facility queried (Manual) **	UMKLW	$134.00	$134.00	$134.00	$134.00	$134.00	$134.00	$134.00	$134.00	$100.00

BELLSOUTH/API RATES
NETWORK ELEMENTS
AND OTHER SERVICES

		RATES BY STATE								
DESCRIPTION	**USOC**	**AL**	**FL**	**GA**	**KY**	**LA**	**MS**	**NC**	**SC**	**TN**
Loop Makeup - Preordering Without Reservation, per spare facility queried (Manual) Maximum number of spare facilities per manual LMUSI is 3. **	UMKLW	$134.00	$134.00	$134.00	$134.00	$134.00	$134.00	$134.00	$134.00	$100.00
NRC-Loop Makeup - Preordering With Reservation, per spare facility queried (Manual) Max number of spare facilities per manual LMUSI is 3. **	UMKLP	$140.00	$140.00	$140.00	$140.00	$140.00	$140.00	$140.00	$140.00	$100.00
NRC - Loop Makeup - Preordering Without Reservation, per working facility queried (Mechanized) **		$1.08	$1.08	$1.08	$1.08	$1.08	$1.08	$1.08	$1.08	$0.6888
Loop Makeup - Preordering Without Reservation, per spare facility queried (Mechanized) Max number of spare facilities per mechanized LMUSI is 10.**		$1.08	$1.08	$1.08	$1.08	$1.08	$1.08	$1.08	$1.08	$0.6888
Loop Makeup - Preordering With Reservation, per spare facility queried (Mechanized) Max number of spare facilities per mechanized LMUSI is 10.**		$1.08	$1.08	$1.08	$1.08	$1.08	$1.08	$1.08	$1.08	$0.6888
Unbundled Network Terminating Wire, per pair, per month	UENPP	$0.49	$0.46	$1.37	$0.64	$0.35	TBD	$0.44	$0.46	TBD
NRC - UNTW Pair, per pair	UENPP	$40.02	$65.35	$2.48	$65.35	$64.77	TBD	$65.82	$60.93	TBD
NRC - Disconnect Charge, per pair	UENPP	$0.87	NA	$1.74	NA	NA	TBD	NA	NA	TBD
NRC - Service Order submitted Electronically, per LSR	SOMEC	$3.50	$2.75	$3.50	$3.50	$3.50	TBD	$3.50	$3.50	TBD
NRC - Setvice Order submitted Electronically, per LSR - Disconnect	SOMEC	NA	$0.42	NA	NA	NA	TBD	TBD	TBD	TBD
NRC - Service Order submitted Manually, per LSR	SOMAN	NA	$21.56	NA	$29.24	$29.24	TBD	TBD	TBD	TBD
NRC - Service Order submitted Manually, per LSR, Disconnect	SOMAN	NA	$3.84	NA	$3.94	$3.94	TBD	TBD	TBD	TBD
Sub-Loop Concentration - Channelization Sys (Outside CO)										
NRC - Service Order submitted Electronically, per LSR	SOMEC	$3.50	$2.75	$3.50	$3.50	$3.50	TBD	$3.50	$3.50	$3.50
NRC - Setvice Order submitted Electronically, per LSR - Disconnect	SOMEC	NA	$0.42	NA	NA	NA	TBD	TBD	TBD	NA
NRC - Service Order submitted Manually, per LSR	SOMAN	NA	$21.56	NA	$29.24	$29.24	TBD	TBD	TBD	$19.99
NRC - Service Order submitted Manually, per LSR, Disconnect	SOMAN	NA	$3.84	NA	$3.94	$3.94	TBD	TBD	TBD	NA
NRC - Incremental Charge - Manual Service Order - 1st	SOMAN	TBD	NA	$18.94	TBD	TBD	TBD	NA	NA	NA
NRC - Incremental Charge - Manual Service Order - Add'l	SOMAN	TBD	NA	$8.42	TBD	TBD	TBD	NA	NA	NA
TR008 - System A (96 channel capacity - channels 1-96), per month	UCT8A	$829.76	$477.76	$724.79	$493.89	$546.21	TBD	$579.03	$571.42	$683.78
NRC - 1st	UCT8A	$404.46	$408.22	$632.36	$408.23	$407.65	TBD	$587.83	$586.42	$634.31
NRC - Add'l	UCT8A	$220.32	$222.37	$310.82	$222.37	$222.06	TBD	$278.83	$277.97	$311.78
NRC-Disconnect, 1st	UCT8A	$236.23	$236.02	NA	$253.87	$258.08	TBD	NA	NA	NA
NRC-Disconnect, Add'l	UCT8A	$74.90	$74.84	NA	$80.50	$81.83	TBD	NA	NA	NA
TR008 - System B (96 channel capacity - channels 97-192), per month	UCT8B	$87.34	$85.12	$92.91	$82.15	$87.89	TBD	$85.59	$87.65	$102.12
NRC - 1st	UCT8B	$404.46	$408.22	$632.36	$408.23	$407.65	TBD	$587.83	$586.42	$634.31
NRC - Add'l	UCT8B	$220.32	$222.37	$310.82	$222.37	$222.06	TBD	$278.83	$277.97	$311.78
NRC-Disconnect, 1st	UCT8B	$236.23	$236.02	NA	$253.87	$258.08	TBD	NA	NA	NA
NRC-Disconnect, Add'l	UCT8B	$74.90	$74.84	NA	$80.50	$81.83	TBD	NA	NA	NA
TR303 - System A (96 channel capacity - channels 1-96), per month	UCT3A	$868.77	$512.86	$764.42	$530.75	$584.28	TBD	$615.62	$611.62	$726.87
NRC - 1st	UCT3A	$404.46	$408.22	$632.36	$408.23	$407.65	TBD	$587.83	$586.42	$634.31
NRC - Add'l	UCT3A	$220.32	$222.37	$310.82	$222.37	$222.06	TBD	$278.83	$277.97	$311.78
NRC-Disconnect, 1st	UCT3A	$236.23	$236.02	NA	$253.87	$258.08	TBD	NA	NA	NA
NRC-Disconnect, Add'l	UCT3A	$74.90	$74.84	NA	$80.50	$81.83	TBD	NA	NA	NA
TR303 - System B (96 channel capacity - channels 97-192), per month	UCT3B	$126.35	$120.21	$132.54	$119.01	$125.95	TBD	$122.18	$127.76	$145.21
NRC - 1st	UCT3B	$404.46	$408.22	$632.36	$408.23	$407.65	TBD	$587.83	$586.42	$634.31
NRC - Add'l	UCT3B	$220.32	$222.37	$310.82	$222.37	$222.06	TBD	$278.83	$277.97	$311.78
NRC-Disconnect, 1st	UCT3B	$236.23	$236.02	NA	$253.87	$258.08	TBD	NA	NA	NA
NRC-Disconnect, Add'l	UCT3B	$74.90	$74.84	NA	$80.50	$81.83	TBD	NA	NA	NA
DS1 Feeder Interface, per month	UCTFS	$67.03	NA	$72.12	NA	NA	TBD	$64.63	$69.24	$76.73
Zone 1, per month	UCTFS	NA	$56.65	TBD	$60.01	$73.29	TBD	TBD	TBD	TBD
Zone 2, per month	UCTFS	NA	$65.86	TBD	$60.04	$88.72	TBD	TBD	TBD	TBD
Zone 3, per month	UCTFS	NA	$107.08	TBD	$106.11	$187.11	TBD	TBD	TBD	TBD
Zone 4, per month	UCTFS	NA	NA	NA	NA	NA	TBD	NA	NA	NA
NRC 1st	UCTFS	$192.51	$211.55	$425.74	$209.62	$209.47	TBD	$237.09	$236.32	$418.37

BELLSOUTH/API RATES
NETWORK ELEMENTS
AND OTHER SERVICES

		RATES BY STATE								
DESCRIPTION	**USOC**	**AL**	**FL**	**GA**	**KY**	**LA**	**MS**	**NC**	**SC**	**TN**
NRC Add'l	UCTFS	$105.73	$129.04	$198.06	$127.11	$127.07	TBD	$116.01	$115.55	$198.67
NRC-Disconnect, 1st	UCTFS	$56.94	$127.78	NA	$133.43	$135.74	TBD	NA	NA	NA
NRC-Disconnect, Add'l	UCTFS	$12.81	$33.06	NA	$33.59	$34.25	TBD	NA	NA	NA
Channel Interface-2 Wire Voice-Loop Start or Ground Start, per mo	ULCC2	$2.38	$2.12	$2.38	$2.24	$2.34	TBD	$2.22	$2.43	$2.61
NRC 1st	ULCC2	$20.88	$21.07	$41.82	$21.08	$21.05	TBD	$28.66	$28.58	$41.95
NRC Add'l	ULCC2	$20.77	$20.96	$41.58	$20.96	$20.93	TBD	$28.50	$28.42	$41.71
NRC-Disconnect, 1st	ULCC2	$10.00	$9.99	NA	$10.75	$10.92	TBD	NA	NA	
NRC-Disconnect, Add'l	ULCC2	$9.94	$9.93	NA	$10.68	$10.86	TBD	NA	NA	
Channel Interface - 2 Wire ISDN, per month	ULCC1	$9.51	$8.48	$9.53	$8.98	$9.34	TBD	$8.88	$9.72	$10.43
NRC 1st	ULCC1	$20.88	$21.07	$41.82	$21.08	$21.05	TBD	$21.24	$28.58	$41.95
NRC Add'l	ULCC1	$20.77	$20.96	$41.58	$20.96	$20.93	TBD	$21.13	$28.42	$41.71
NRC-Disconnect, 1st	ULCC1	$10.00	$9.99	NA	$10.75	$10.92	TBD	NA	NA	NA
NRC-Disconnect, Add'l	ULCC1	$9.94	$9.93	NA	$10.68	$10.86	TBD	NA	NA	NA
Channel Interface - 2 Wire Voice - Reverse Battery, per month	ULCCR	$14.14	$12.61	$14.17	$13.35	$13.89	TBD	$13.20	$14.46	$15.51
. NRC 1st	ULCCR	$20.88	$21.07	$41.82	$21.08	$21.05	TBD	$28.66	$28.58	$41.95
NRC Add'l	ULCCR	$20.77	$20.96	$41.58	$20.96	$20.93	TBD	$28.50	$28.42	$41.71
NRC-Disconnect, 1st	ULCCR	$10.00	$9.99	NA	$10.75	$10.92	TBD	NA	NA	NA
NRC-Disconnect, Add'l	ULCCR	$9.94	$9.93	NA	$10.68	$10.86	TBD	NA	NA	NA
Channel Interface - 4 Wire Voice (Specials Card), per month	ULCC4	$8.43	$7.52	$8.45	$7.96	$8.29	TBD	$7.87	$8.62	$9.26
NRC 1st	ULCC4	$20.88	$21.07	$41.82	$21.08	$21.05	TBD	$28.66	$28.58	$41.95
NRC Add'l	ULCC4	$20.77	$20.96	$41.58	$20.96	$20.93	TBD	$28.50	$28.42	$41.71
NRC-Disconnect, 1st	ULCC4	$10.00	$9.99	NA	$10.75	$10.92	TBD	NA	NA	NA
NRC-Disconnect, Add'l	ULCC4	$9.94	$9.93	NA	$10.68	$10.86	TBD	NA	NA	NA
Test Circuit, per month	UCTTC	$41.21	$36.76	$41.30	$38.90	$40.49	TBD	$38.47	$42.14	$45.22
NRC 1st	UCTTC	$20.88	$21.07	$41.82	$21.08	$21.05	TBD	$28.66	$28.58	$41.95
NRC Add'l	UCTTC	$20.77	$20.96	$41.58	$20.96	$20.93	TBD	$28.50	$28.42	$41.71
NRC-Disconnect, 1st	UCTTC	$10.00	$9.99	NA	$10.75	$10.92	TBD	NA	NA	NA
NRC-Disconnect, Add'l	UCTTC	$9.94	$9.93	NA	$10.68	$10.86	TBD	NA	NA	NA
Channel Interface - Digital 56Kbps, per month	ULCC5	$12.49	$11.14	$12.51	$11.79	$12.27	TBD	$11.66	$12.77	$13.71
NRC 1st	ULCC5	$20.88	$21.07	$41.82	$21.08	$21.05	TBD	$28.66	$28.58	$41.95
NRC Add'l	ULCC5	$20.77	$20.96	$41.58	$20.96	$20.93	TBD	$28.50	$28.42	$41.71
NRC-Disconnect, 1st	ULCC5	$10.00	$9.99	NA	$10.75	$10.92	TBD	NA	NA	NA
NRC-Disconnect, Add'l	ULCC5	$9.94	$9.93	NA	$10.68	$10.86	TBD	NA	NA	NA
Channel Interface - Digital 64Kbps, per month	ULCC6	$12.49	$11.14	$12.51	$14.08	$12.27	TBD	$11.66	$12.77	$13.71
NRC 1st	ULCC6	$20.88	$21.07	$41.82	$21.08	$21.05	TBD	$28.66	$28.58	$41.95
NRC Add'l	ULCC6	$20.77	$20.96	$41.58	$20.96	$20.93	TBD	$28.50	$28.42	$41.71
NRC-Disconnect, 1st	ULCC6	$10.00	$9.99	NA	$10.75	$10.92	TBD	NA	NA	NA
NRC-Disconnect, Add'l	ULCC6	$9.94	$9.93	NA	$10.68	$10.86	TBD	NA	NA	NA
Loop Concentration System (Inside C.O.)										
NRC - Service Order submitted Electronically, per LSR	SOMEC	$3.50	$2.75	$3.50	$3.50	$3.50	$3.50	$3.50	$3.50	$3.50
NRC - Setvice Order submitted Electronically, per LSR - Disconnect	SOMEC	NA	$0.42	NA	NA	NA	NA	NA	NA	NA
NRC - Service Order submitted Manually, per LSR	SOMAN	NA	$21.56	NA	$29.24	$29.24	NA	NA	NA	$19.99
NRC - Service Order submitted Manually, per LSR, Disconnect	SOMAN	NA	$3.84	NA	$3.94	$3.94	NA	NA	NA	NA
NRC - Incremental Charge - Manual Service Order - 1st	SOMAN	TBD	NA	$18.94	TBD	$18.14	$25.52	TBD	$44.06	TBD
NRC - Incremental Charge - Manual Service Order - Add'l	SOMAN	TBD	NA	$8.42	TBD	$8.06	$11.34	TBD	$13.55	TBD
TR008 -System A (96 channel capacity - channels 1-96), per month	UCT8A	$327.44	$470.73	$316.63	$522.17	$432.54	$454.79	$375.96	$399.21	$380.06
NRC - 1st	UCT8A	$1,115.10	$651.05	$1,111.95	$651.04	$650.11	$1,115.10	$1,113.00	$1,119.30	$1,114.05
NRC - Add'l	UCT8A	NA	NA	NA	NA	NA	NA	NA	NA	NA
NRC-Disconnect, 1st	UCT8A	NA	NA	NA	NA	NA	NA	NA	NA	NA
NRC-Disconnect, Add'l	UCT8A	NA	NA	NA	NA	NA	NA	NA	NA	NA
TR008 -System B (96 channel capacity - channels 97-192), per month	UCT8B	$67.41	$55.96	$65.27	$63.59	$61.71	$73.30	$65.98	$71.91	$68.71
NRC - 1st	UCT8B	$464.57	$271.27	$463.37	$271.27	$270.88	$464.71	$463.74	$466.38	$464.21

BELLSOUTH/API RATES
NETWORK ELEMENTS
AND OTHER SERVICES

		RATES BY STATE								
DESCRIPTION	**USOC**	**AL**	**FL**	**GA**	**KY**	**LA**	**MS**	**NC**	**SC**	**TN**
NRC - Add'l	UCT8B	NA	NA	NA	NA	NA	NA	NA	NA	NA
NRC-Disconnect, 1st	UCT8B	NA	NA	NA	NA	NA	NA	NA	NA	NA
NRC-Disconnect, Add'l	UCT8B	NA	NA	NA	NA	NA	NA	NA	NA	NA
TR303 - System A (96 channel capacity - channels 1-96), per month	UCT3A	$375.18	$510.37	$362.87	$567.21	$476.24	$506.70	$422.68	$450.13	$428.73
NRC - 1st	UCT3A	$1,115.10	$651.05	$1,111.95	$651.04	$650.11	$1,115.10	$1,113.00	$1,119.30	$1,114.05
NRC - Add'l	UCT3A	NA	NA	NA	NA	NA	NA	NA	NA	NA
NRC-Disconnect, 1st	UCT3A	NA	NA	NA	NA	NA	NA	NA	NA	NA
NRC-Disconnect, Add'l	UCT3A	NA	NA	NA	NA	NA	NA	NA	NA	NA
TR303 - System B (96 channel capacity - channels 97-192), per month	UCT3B	$111.30	$94.30	$110.02	$107.16	$103.99	$123.52	$111.17	$121.16	$115.79
NRC - 1st	UCT3B	$464.57	$271.27	$463.37	$271.27	$270.88	$464.71	$463.74	$466.38	$464.21
NRC - Add'l	UCT3B	NA	NA	NA	NA	NA	NA	NA	NA	NA
NRC-Disconnect, 1st	UCT3B	NA	NA	NA	NA	NA	NA	NA	NA	NA
NRC-Disconnect, Add'l	UCT3B	NA	NA	NA	NA	NA	NA	NA	NA	NA
DS1 Interface, per month	UCTCO	$6.42	$5.28	$6.15	$6.04	$5.91	$6.99	$6.27	$6.79	$6.49
NRC 1st	UCTCO	$367.70	$126.61	$366.72	$126.61	$126.43	$367.80	$367.04	$369.13	$367.41
NRC Add'l	UCTCO	$132.03	$92.17	$130.63	$92.17	$92.04	$132.07	$131.79	$132.54	$131.92
NRC-Disconnect, 1st	UCTCO	NA	$31.11	NA	$33.46	$34.02	NA	NA	NA	NA
NRC-Disconnect, Add'l	UCTCO	NA	$8.71	NA	$9.37	$9.52	NA	NA	NA	NA
Channel Interface-2 Wire Voice-Loop Start or Ground Start, per month	ULCC2	$2.55	$2.10	$2.44	$2.40	$2.35	$2.77	$0.89	$2.69	$2.58
NRC 1st	ULCC2	$35.77	$21.07	$35.68	$21.08	$21.05	$35.78	$35.73	$35.91	$35.74
NRC Add'l	ULCC2	$35.55	$20.96	$35.48	$20.96	$20.93	$35.37	$35.49	$35.71	$35.54
NRC-Disconnect, 1st	ULCC2	NA	$9.99	NA	$10.75	$10.92	NA	NA	NA	NA
NRC-Disconnect, Add'l	ULCC2	NA	$9.93	NA	$10.68	$10.86	NA	NA	NA	NA
Channel Interface - 2 Wire ISDN, per month	ULCC1	$10.19	$8.38	$9.76	$9.59	$9.39	$11.10	$9.95	$10.76	$10.30
NRC 1st	ULCC1	$35.77	$21.07	$35.68	$21.08	$21.05	$35.78	$35.71	$35.91	$35.74
NRC Add'l	ULCC1	$35.55	$20.96	$35.48	$20.96	$20.93	$35.37	$35.51	$35.71	$35.54
NRC-Disconnect, 1st	ULCC1	NA	$9.99	NA	$10.75	$10.92	NA	NA	NA	NA
NRC-Disconnect, Add'l	ULCC1	NA	$9.93	NA	$10.68	$10.86	NA	NA	NA	NA
Channel Interface - 2 Wire Voice - Reverse Battery, per month	ULCCR	$15.15	$12.46	$14.51	$14.26	$13.95	$16.46	$14.80	$16.01	$15.32
. NRC 1st	ULCCR	$35.77	$21.07	$35.68	$21.08	$21.05	$35.78	$35.71	$35.91	$35.74
NRC Add'l	ULCCR	$35.55	$20.96	$35.48	$20.96	$20.93	$35.37	$35.51	$35.71	$35.54
NRC-Disconnect, 1st	ULCCR	NA	$9.99	NA	$10.75	$10.92	NA	NA	NA	NA
NRC-Disconnect, Add'l	ULCCR	NA	$9.93	NA	$10.68	$10.86	NA	NA	NA	NA
Channel Interface - 4 Wire Voice, per month	ULCC4	$9.04	$7.43	$8.65	$8.51	$8.32	$9.83	$8.82	$9.55	$9.13
NRC 1st	ULCC4	$35.77	$21.07	$35.68	$21.08	$21.05	$35.78	$35.71	$35.91	$35.74
NRC Add'l	ULCC4	$35.55	$20.96	$35.48	$20.96	$20.93	$35.37	$35.51	$35.71	$35.54
NRC-Disconnect, 1st	ULCC4	NA	$9.99	NA	$10.75	$10.92	NA	NA	NA	NA
NRC-Disconnect, Add'l	ULCC4	NA	$9.93	NA	$10.68	$10.86	NA	NA	NA	NA
Test Circuit, per month	UCTTC	$44.16	36.31	$42.30	$41.58	$40.67	$47.85	$43.13	$46.66	$44.65
NRC 1st	UCTTC	$35.77	$21.07	$35.68	$21.08	$21.05	$35.78	$35.71	$35.91	$35.74
NRC Add'l	UCTTC	$35.55	$20.96	$35.48	$20.96	$20.93	$35.37	$35.51	$35.71	$35.54
NRC-Disconnect, 1st	UCTTC	$35.55	$9.99	NA	$10.75	$10.92	NA	NA	NA	NA
NRC-Disconnect, Add'l	UCTTC	$35.55	$9.93	NA	$10.68	$10.86	NA	NA	NA	NA
Channel Interface - Digital 56Kbps, per month	ULCC5	TBD	$11.01	TBD	$12.60	$12.33	TBD	TBD	TBD	TBD
NRC 1st	ULCC5	TBD	$21.07	TBD	$21.08	$21.05	TBD	TBD	TBD	TBD
NRC Add'l	ULCC5	TBD	$20.96	TBD	$20.96	$20.93	TBD	TBD	TBD	TBD
NRC-Disconnect, 1st	ULCC5	TBD	$9.99	NA	$10.75	$10.92	TBD	TBD	TBD	TBD
NRC-Disconnect, Add'l	ULCC5	TBD	$9.93	NA	$10.68	$10.86	TBD	TBD	TBD	TBD
Channel Interface - Digital 64Kbps, per month	ULCC6	TBD	$11.01	TBD	$12.60	$12.33	TBD	TBD	TBD	TBD
NRC 1st	ULCC6	TBD	$21.07	TBD	$21.08	$21.05	TBD	TBD	TBD	TBD
NRC Add'l	ULCC6	TBD	$20.96	TBD	$20.96	$20.93	TBD	TBD	TBD	TBD
NRC-Disconnect, 1st	ULCC6	TBD	$9.99	NA	$10.75	$10.92	TBD	TBD	TBD	TBD

BELLSOUTH/API RATES
NETWORK ELEMENTS
AND OTHER SERVICES

		RATES BY STATE								
DESCRIPTION	**USOC**	**AL**	**FL**	**GA**	**KY**	**LA**	**MS**	**NC**	**SC**	**TN**
NRC-Disconnect, Add'l	ULCC6	TBD	$9.93	NA	$10.68	$10.86	TBD	TBD	TBD	TBD
LINE SHARING										
2-Wire analog VG (SL1) for Line Sharing										
RC - per month (Note 3) **		TBD	TBD	TBD	TBD	TBD	TBD	TBD	TBD	$12.16
NRC - 1st (Note 3) **		TBD	TBD	TBD	TBD	TBD	TBD	TBD	TBD	$31.99
NRC - Add'l (Note 3) **		TBD	TBD	TBD	TBD	TBD	TBD	TBD	TBD	$20.02
System Splitter - 96 Line Capacity										
RC - Per month **	ULSDA	$100.00	$100.00	$100.00	$100.00	$100.00	$100.00	$100.00	$100.00	$100.00
NRC - 1st **	ULSDA	$150.00	$150.00	$150.00	$300.00	$150.00	$300.00	$300.00	$300.00	$150.00
NRC - Addl **	ULSDA	$0.00	$0.00	$0.00	$0.00	$0.00	$0.00	$0.00	$0.00	$0.00
NRC - Disconnect 1st **	ULSDA	$150.00	$150.00	$150.00	NA	$150.00	NA	NA	NA	$150.00
NRC - Disconnect Add'l **	ULSDA	$0.00	$0.00	$0.00	$0.00	$0.00	$0.00	$0.00	$0.00	$0.00
System Splitter - 24 Line Capacity										
RC - Per month **	ULSDB	$25.00	$25.00	$25.00	$25.00	$25.00	$25.00	$25.00	$25.00	$25.00
NRC - 1st **	ULSDB	$150.00	$150.00	$150.00	$300.00	$150.00	$300.00	$300.00	$300.00	$150.00
NRC - Addl **	ULSDB	$0.00	$0.00	$0.00	$0.00	$0.00	$0.00	$0.00	$0.00	$0.00
NRC - Disconnect 1st **	ULSDB	$150.00	$150.00	$150.00	NA	$150.00	NA	NA	NA	$150.00
NRC - Disconnect Add'l **	ULSDB	$0.00	$0.00	$0.00	$0.00	$0.00	$0.00	$0.00	$0.00	$0.00
Loop Capacity, Line Activation Per Occurrence										
RC - Per Month **	ULSDC	$6.00	$6.00	$6.00	$6.00	$6.00	$6.00	$6.00	$6.00	$3.48
NRC - 1st **	ULSDC	$40.00	$40.00	$40.00	$40.00	$40.00	$40.00	$40.00	$40.00	$40.00
NRC - Addl **	ULSDC	$22.00	$22.00	$22.00	$22.00	$22.00	$22.00	$22.00	$22.00	$21.39
NRC - Service Order submitted Electronically, per LSR	SOMEC	$3.50	$2.75	$3.50	$3.50	$3.50	$3.50	$3.50	$3.50	$3.50
NRC - Setvice Order submitted Electronically, per LSR - Disconnect	SOMEC	NA	$0.42	NA	NA	NA	NA	NA	NA	TBD
NRC - Service Order submitted Manually, per LSR	SOMAN	NA	$21.56	NA	$29.24	NA	NA	NA	NA	$19.99
NRC - Service Order submitted Manually, per LSR, Disconnect	SOMAN	NA	$3.84	NA	$3.94	NA	NA	NA	NA	TBD
NRC - Incremental Charge - Manual Service Order - 1st	SOMAN	$27.37	NA	$18.94	NA	$18.14	$25.52	$26.94	$44.22	NA
NRC - Incremental Charge - Manual Service Order - Add'l	SOMAN	$12.97	NA	$8.42	NA	$8.06	$11.34	$12.76	$13.55	NA
NRC - Incremental Charge - Manual Service Order - Disconnect	SOMAN	$17.77	NA	NA	NA	$11.41	$16.06	NA	NA	NA
Subsequent Activity - Per Occurrence										
NRC - 1st **	ULSDS	$30.00	$30.00	$30.00	$30.00	$30.00	$30.00	$30.00	$30.00	$30.00
NRC - Addl **	ULSDS	$15.00	$15.00	$15.00	$15.00	$15.00	$15.00	$15.00	$15.00	$15.00
* Interim Rates subject to true-up										
** TN rates are interim and subject to true-up.										
NOTES:										
1 In states where a specific NRC for customer transfer, feature additions and changes is not stated, the applicable NRC from the appropriate tariff applies.										

BELLSOUTH/API RATES
NETWORK ELEMENTS
AND OTHER SERVICES

					RATES BY STATE								
	DESCRIPTION			USOC	AL	FL	GA	KY	LA	MS	NC	SC	TN	
		2	Geographically Deaveraged UNE Zones and applicable rates have been established for certain services, as shown in this Agreement. Where Geographically Deaveraged UNE Zones and applicable rates are established, Statewide rates are obsolete. Further, BellSouth is in the process of enhancing its billing systems in order to accomodate this Geographically Deaveraged UNE Zone Rate Structure. Until these enhancements are accomplished, estimated to be mid 2001, the UNE Zone 1 rate will be billed for all services residing in Zones 1, 2, 3 or 4, i.e., Rates for services residing in UNE Zones 2, 3 and UNE Zone 4, where applicable, will not be billed. Once billing enhancements are complete, all applicable UNE Zone rates reflected in this Agreement will be billed. Reference Internet Website http://www.interconnection.bellsouth.com/become_clec/ docs/interconnection/deavuzns.pdf to view Geographically Deaveraged UNE Zone Designations by Central Office.											
		3	The recurring interim and nonrecurring interim rates in TN for 2-Wire analog VG (SL1) for Line Sharing is for a stand-alone loop purchased by CLEC-1 to provide both analog voice service and xDSL services or in the event CLEC-1 wishes to continue providing xDSL services to an end-user who terminates its BellSouth-provided voice service. These rates apply when CLEC-1 purchases the splitter from BellSouth.											

BELLSOUTH/API RATES
NETWORK ELEMENTS
AND OTHER SERVICES

DESCRIPTION	USOC	AL	FL	GA	KY	LA	MS	NC	SC	TN
LOCAL EXCHANGE SWITCHING (PORTS)										
2-Wire Analog Line Port (Res., Bus.), per month										
2-Wire Voice Grade Line Port (Residence), per month										
2- wire voice unbundled port - residence	UEPRL	$2.07	$1.62	$1.85 - Note 1	$2.61 - Note 1	$2.20	$2.11	$2.19	$2.35	$4.73 - Note 1
2-wire voice unbundled port with caller ID - residence	UEPRC	$2.07	$1.62	$1.85	$2.61	$2.20	$2.11	$2.00	$2.35	$4.73
2-wire voice unbundled port outgoing only - residence	UEPRO	$2.07	$1.62	$1.85	$2.61	$2.20	$2.11	$2.00	$2.35	$4.73
2-wire voice grade unbundled Alabama extended local dialing parity port with caller ID	UEPAR	$2.07	NA	NA	NA	NA	NA	NA	NA	NA
2-wire voice grade unbundled Kentucky extended local dialing parity port with caller ID	UEPRM	NA	NA	NA	$2.61	NA	NA	NA	NA	NA
2-wire voice grade unbundled Louisiana extended local dialing parity port with caller ID	UEPAS	NA	NA	NA	NA	$2.20	NA	NA	NA	NA
2-wire voice grade unbundled Mississippi extended local dialing parity port with caller ID	UEPAT	NA	NA	NA	NA	NA	$2.11	NA	NA	NA
2-wire voice grade unbundled South Carolina extended local dialing parity port with caller ID	UEPAU	NA	NA	NA	NA	NA	NA	NA	$2.35	NA
2-wire voice grade unbundled Tennessee extended local dialing parity port with caller ID	UEPAQ	NA	NA	NA	NA	NA	NA	NA	NA	$4.73
2-wire voice unbundled Florida area calling with caller ID - residence	UEPAF	NA	$1.62	NA	NA	NA	NA	NA	NA	NA
2-wire voice unbundled Louisiana Area Plus with caller ID - residence (RUL)	UEPAG	NA	NA	NA	NA	$2.20	NA	NA	NA	NA
2-wire voice unbundled Louisiana Area Plus with caller ID - residence (AC7)	UEPAH	NA	NA	NA	NA	$2.20	NA	NA	NA	NA
2-wire voice unbundled South Carolina Area Calling port with Caller ID - residence (LW8)	UEPAJ	NA	NA	NA	NA	NA	NA	NA	$2.35	NA
2-wire voice unbundled Tennessee Area Calling port with Caller ID - residence (F2R)	UEPAK	NA	NA	NA	NA	NA	NA	NA	NA	$4.73
2-wire voice unbundled Tennessee Area Calling port with Caller ID - residence (TACER)	UEPAL	NA	NA	NA	NA	NA	NA	NA	NA	$4.73
2-wire voice unbundled Tennessee Area Calling port with Caller ID - residence (TACSR)	UEPAM	NA	NA	NA	NA	NA	NA	NA	NA	$4.73
2-wire voice unbundled Tennessee Area Calling port with Caller ID - residence (1MF2X)	UEPAN	NA	NA	NA	NA	NA	NA	NA	NA	$4.73
2-wire voice unbundled Tennessee Area Calling port with Caller ID - residence (2MR)	UEPAO	NA	NA	NA	NA	NA	NA	NA	NA	$4.73
2-wire voice unbundled res, low usage line port with Caller ID (LUM)	UEPAP	$2.07	$1.62	$1.85	$2.61	$2.20	$2.11	$2.00	$2.35	$4.73
LOCAL NUMBER PORTABILITY (REQUIRES ONE PER PORT)	LNPCX									
2-Wire Voice Grade Line Port(Business), per month										
2-wire voice unbundled port without Caller ID	UEPBL	$2.07	$1.62	$1.85	$2.61	$2.20	$2.11	$2.00	$2.35	$4.73
2-wire voice unbundled port with unbundled port with Caller+E484 ID	UEPBC	$2.07	$1.62	$1.85	$2.61	$2.20	$2.11	$2.00	$2.35	$4.73
2-wire voice unbundled outgoing only port	UEPBO	$2.07	$1.62	$1.85	$2.61	$2.20	$2.11	$2.00	$2.35	$4.73
2-wire voice grade unbundled Alabama extended local dialing parity port with caller ID	UEPAW	$2.07	NA	NA	NA	NA	NA	NA	NA	NA
2-wire voice grade unbundled Kentucky extended local dialing parity port with caller ID	UEPBM	NA	NA	NA	$2.61	NA	NA	NA	NA	NA
2-wire voice grade unbundled Louisiana extended local dialing parity port with caller ID	UEPAX	NA	NA	NA	NA	$2.20	NA	NA	NA	NA
2-wire voice grade unbundled Mississippi extended local dialing parity port with caller ID	UEPAY	NA	NA	NA	NA	NA	$2.11	NA	NA	NA
2-wire voice grade unbundled South Carolina extended local dialing parity port with caller ID	UEPAZ	NA	NA	NA	NA	NA	NA	NA	$2.35	NA
2-wire voice grade unbundled Tennessee extended local dialing parity port with caller ID	UEPAV	NA	NA	NA	NA	NA	NA	NA	NA	$4.73
2-wire voice unbundled incoming only port with Caller ID	UEPB1	$2.07	$1.62	$1.85	$2.61	$2.20	$2.11	$2.00	$2.35	$4.73

BELLSOUTH/API RATES
NETWORK ELEMENTS
AND OTHER SERVICES

DESCRIPTION	USOC	AL	FL	GA	KY	LA	MS	NC	SC	TN
2-wire voice unbundled LA Bus Area Calling Port with Caller ID (BUC)	UEPAA	NA	NA	NA	NA	$2.20	NA	NA	NA	NA
2-wire voice unbundled SC Bus Area Calling Port with Caller ID (LMB)	UEPAB	NA	NA	NA	NA	NA	NA	NA	$2.35	NA
2-wire voice unbundled TN Bus 2-Way Area Calling Port Economy Option (TACC1)	UEPAC	NA	NA	NA	NA	NA	NA	NA	NA	$4.73
2-wire voice unbundled TN Bus 2-Way Area Calling Port Standard Option (TACC2)	UEPAD	NA	NA	NA	NA	NA	NA	NA	NA	$4.73
2-wire voice unbundled TN Bus 2-WAY Collierville and Memphis Local Calling Port (B2F)	UEPAE	NA	NA	NA	NA	NA	NA	NA	NA	$4.73
LOCAL NUMBER PORTABILITY (REQUIRES ONE PER PORT)	LNPCX									
Non-Recurring Charges (NRC) - 1st (Residence)										
2- wire voice unbundled port - residence	UEPRL	$21.93	$4.76	$17.16	$37.78	$16.43	$22.98	$21.60	$24.98	$9.93
2-wire voice unbundled port with caller ID - residence	UEPRC	$21.93	$4.76	$17.16	$37.78	$16.43	$22.98	$24.04	$24.98	$9.93
2-wire voice unbundled port outgoing only - residence	UEPRO	$21.93	$4.76	$17.16	$37.78	$16.43	$22.98	$24.04	$24.98	$9.93
2-wire voice grade unbundled Alabama extended local dialing parity port with caller ID	UEPAR	$21.93	NA	NA	NA	NA	NA	NA	NA	NA
2-wire voice grade unbundled Kentucky extended local dialing parity port with caller ID	UEPRM	NA	NA	NA	$37.78	NA	NA	NA	NA	NA
2-wire voice grade unbundled Louisiana extended local dialing parity port with caller ID	UEPAS	NA	NA	NA	NA	$16.43	NA	NA	NA	NA
2-wire voice grade unbundled Mississippi extended local dialing parity port with caller ID	UEPAT	NA	NA	NA	NA	NA	$22.98	NA	NA	NA
2-wire voice grade unbundled South Carolina extended local dialing parity port with caller ID	UEPAU	NA	NA	NA	NA	NA	NA	NA	$24.98	NA
2-wire voice grade unbundled Tennessee extended local dialing parity port with caller ID	UEPAQ	NA	NA	NA	NA	NA	NA	NA	NA	$9.93
2-wire voice unbundled Florida area calling with caller ID - residence	UEPAF	NA	$4.76	NA	NA	NA	NA	NA	NA	NA
2-wire voice unbundled Louisiana Area Plus with caller ID - residence (RUL)	UEPAG	NA	NA	NA	NA	$16.43	NA	NA	NA	NA
2-wire voice unbundled Louisiana Area Plus with caller ID - residence (AC7)	UEPAH	NA	NA	NA	NA	$16.43	NA	NA	NA	NA
2-wire voice unbundled South Carolina Area Calling port with Caller ID - residence (LW8)	UEPAJ	NA	NA	NA	NA	$16.43	NA	NA	NA	NA
2-wire voice unbundled Tennessee Area Calling port with Caller ID - residence (F2R)	UEPAK	NA	NA	NA	NA	NA	NA	NA	$24.98	NA
2-wire voice unbundled Tennessee Area Calling port with Caller ID - residence (TACER)	UEPAL	NA	NA	NA	NA	NA	NA	NA	NA	$9.93
2-wire voice unbundled Tennessee Area Calling port with Caller ID - residence (TACSR)	UEPAM	NA	NA	NA	NA	NA	NA	NA	NA	$9.93
2-wire voice unbundled Tennessee Area Calling port with Caller ID - residence (1MF2X)	UEPAN	NA	NA	NA	NA	NA	NA	NA	NA	$9.93
2-wire voice unbundled Tennessee Area Calling port with Caller ID - residence (2MR)	UEPAO	NA	NA	NA	NA	NA	NA	NA	NA	$9.93
2-wire voice unbundled Res Low Usage Line Port with Caller+E563 ID (LUM)	UEPAP	NA	NA	NA	NA	NA	NA	NA	NA	$9.93
NRC - Add'l (Residence)										
2- wire voice unbundled port - residence	UEPRL	$21.93	$4.54	$17.16	$37.78	$16.43	$22.98	$21.60	$24.98	$9.19
2-wire voice unbundled port with caller ID - residence	UEPRC	$21.93	$4.54	$17.16	$37.78	$16.43	$22.98	$9.08	$24.98	$9.19
2-wire voice unbundled port outgoing only - residence	UEPRO	$21.93	$4.54	$17.16	$37.78	$16.43	$22.98	$9.08	$24.98	$9.19
2-wire voice grade unbundled Alabama extended local dialing parity port with caller ID	UEPAR	$21.93	NA	NA	NA	NA	NA	NA	NA	NA
2-wire voice grade unbundled Kentucky extended local dialing parity port with caller ID	UEPRM	NA	NA	NA	$37.78	NA	NA	NA	NA	NA
2-wire voice grade unbundled Louisiana extended local dialing parity port with caller ID	UEPAS	NA	NA	NA	NA	$16.43	NA	NA	NA	NA

BELLSOUTH/API RATES
NETWORK ELEMENTS
AND OTHER SERVICES

DESCRIPTION	USOC	AL	FL	GA	KY	LA	MS	NC	SC	TN
2-wire voice grade unbundled Mississippi extended local dialing parity port with caller ID	UEPAT	NA	NA	NA	NA	NA	$22.98	NA	NA	NA
2-wire voice grade unbundled South Carolina extended local dialing parity port with caller ID	UEPAU	NA	NA	NA	NA	NA	NA	NA	$24.98	NA
2-wire voice grade unbundled Tennessee extended local dialing parity port with caller ID	UEPAQ	NA	NA	NA	NA	NA	NA	NA	NA	$9.19
2-wire voice unbundled Florida area calling with caller ID - residence	UEPAF	NA	$4.54	NA	NA	NA	NA	NA	NA	NA
2-wire voice unbundled Louisiana Area Plus with caller ID - residence (RUL)	UEPAG	NA	NA	NA	NA	$16.43	NA	NA	NA	NA
2-wire voice unbundled Louisiana Area Plus with caller ID - residence (AC7)	UEPAH	NA	NA	NA	NA	$16.43	NA	NA	NA	NA
2-wire voice unbundled South Carolina Area Calling port with Caller ID - residence (LW8)	UEPAJ	NA	NA	NA	NA	NA	NA	NA	$24.98	NA
2-wire voice unbundled Tennessee Area Calling port with Caller ID - residence (F2R)	UEPAK	NA	NA	NA	NA	NA	NA	NA	NA	$9.19
2-wire voice unbundled Tennessee Area Calling port with Caller ID - residence (TACER)	UEPAL	NA	NA	NA	NA	NA	NA	NA	NA	$9.19
2-wire voice unbundled Tennessee Area Calling port with Caller ID - residence (TACSR)	UEPAM	NA	NA	NA	NA	NA	NA	NA	NA	$9.19
2-wire voice unbundled Tennessee Area Calling port with Caller ID - residence (1MF2X)	UEPAN	NA	NA	NA	NA	NA	NA	NA	NA	$9.19
2-wire voice unbundled Tennessee Area Calling port with Caller ID - residence (2MR)	UEPAO	NA	NA	NA	NA	NA	NA	NA	NA	$9.19
2-wire voice unbundled Res Low Usage Line Port with Caller ID (LUM)	UEPAP	$21.93	$4.54	$17.16	$37.78	$16.43	$22.98	$9.08	$24.98	$9.19
NRC - Subsequent Activity	USASC	$10.00	$10.00	$10.00	$10.00	$10.00	$10.00	$10.00	$10.00	$10.00
NRC - 1st (Business)										
2-wire Voice Unbundled Port without Caller ID	UEPBL	$21.93	$4.76	$17.16	$37.55	$16.43	$22.98	$21.60	$24.98	$9.93
2-wire voice unbundled port with Caller ID	UEPBC	$21.93	$4.76	$17.16	$37.55	$16.43	$22.98	$24.04	$24.98	$9.93
2-wire voice unbundled outgoing only port	UEPBO	$21.93	$4.76	$17.16	$37.55	$16.43	$22.98	$24.04	$24.98	$9.93
2-wire voice grade unbundled Alabama extended local dialing parity port with caller ID	UEPAW	$21.93	NA	NA	NA	NA	NA	NA	NA	NA
2-wire voice grade unbundled Kentucky extended local dialing parity port with caller ID	UEPBM	NA	NA	NA	$37.78	NA	NA	NA	NA	NA
2-wire voice grade unbundled Louisiana extended local dialing parity port with caller ID	UEPAX	NA	NA	NA	NA	$16.43	NA	NA	NA	NA
2-wire voice grade unbundled Mississippi extended local dialing parity port with caller ID	UEPAY	NA	NA	NA	NA	NA	$22.98	NA	NA	NA
2-wire voice grade unbundled South Carolina extended local dialing parity port with caller ID	UEPAZ	NA	NA	NA	NA	NA	NA	NA	$24.98	NA
2-wire voice grade unbundled Tennessee extended local dialing parity port with caller ID	UEPAV	NA	NA	NA	NA	NA	NA	NA	NA	$9.93
2-wire voice unbundled Incoming only Port with Caller ID	UEPB1	$21.93	$4.76	$17.16	$37.55	$16.43	$22.98	$24.04	$24.98	$9.93
2-wire voice unbundled LA Bus Area Calling Port with Caller ID (BUC)	UEPAA	NA	NA	NA	NA	$16.43	NA	NA	NA	NA
2-wire voice unbundled SC Bus Area Calling Port with Caller ID+E587 (LMB)	UEPAB	NA	NA	NA	NA	NA	NA	NA	$24.98	NA
2-wire voice unbundled TN Bus 2-way Area Calling Port Economy Option (TACC1)	UEPAC	NA	NA	NA	NA	NA	NA	NA	NA	$9.93
2-wire voice unbundled TN Bus 2-way Area Calling Port Standard Option (TACC2)	UEPAD	NA	NA	NA	NA	NA	NA	NA	NA	$9.93
2-wire voice unbundled TN Bus 2-way Collierville and Memphis Local Calling Port (B2F)	UEPAE	NA	NA	NA	NA	NA	NA	NA	NA	$9.93
NRC - Add'l (Business)										
2-wire voice unbundled port without Caller ID	UEPBL	$21.93	$4.54	$17.16	$37.55	$16.43	$22.98	$21.60	$24.98	$9.19
2-wire voice unbundled port with Caller ID	UEPBC	$21.93	$4.54	$17.16	$37.55	$16.43	$22.98	$9.08	$24.98	$9.19

BELLSOUTH/API RATES
NETWORK ELEMENTS
AND OTHER SERVICES

DESCRIPTION	USOC	AL	FL	GA	KY	LA	MS	NC	SC	TN
2-wire voice unbundled outgoing only port	UEPBO	$21.93	$4.54	$17.16	$37.55	$16.43	$22.98	$9.08	$24.98	$9.19
2-wire voice grade unbundled Alabama extended local dialing parity port with caller ID	UEPAW	$21.93	NA	NA	NA	NA	NA	NA	NA	NA
2-wire voice grade unbundled Kentucky extended local dialing parity port with caller ID	UEPBM	NA	NA	NA	$37.78	NA	NA	NA	NA	NA
2-wire voice grade unbundled Louisiana extended local dialing parity port with caller ID	UEPAX	NA	NA	NA	NA	$16.43	NA	NA	NA	NA
2-wire voice grade unbundled Mississippi extended local dialing parity port with caller ID	UEPAY	NA	NA	NA	NA	NA	$22.98	NA	NA	NA
2-wire voice grade unbundled South Carolina extended local dialing parity port with caller ID	UEPAZ	NA	NA	NA	NA	NA	NA	NA	$24.98	NA
2-wire voice grade unbundled Tennessee extended local dialing parity port with caller ID	UEPAV	NA	NA	NA	NA	NA	NA	NA	NA	$9.19
2-wire voice unbundled incoming only port with Caller ID	UEPB1	$21.93	$4.54	$17.16	$37.55	$16.43	$22.98	$9.08	$24.98	$9.19
2-wire voice unbundled LA Bus Area Calling Port with Caller ID (BUC)	UEPAA	NA	NA	NA	NA	$16.43	NA	NA	NA	NA
2-wire voice unbundled SC Bus Area Calling Port with Caller ID (LMB)	UEPAB	NA	NA	NA	NA	NA	NA	NA	$24.98	NA
2-wire voice unbundled TN Bus 2-way Area Calling Port Economy Option (TACC1)	UEPAC	NA	NA	NA	NA	NA	NA	NA	NA	$9.19
2-wire voice unbundled TN Bus 2-way Area Calling Port Standard Option (TACC2)	UEPAD	NA	NA	NA	NA	NA	NA	NA	NA	$9.19
2-wire voice unbundled TN Bus 2-way Collierville and Memphis Locall Calling Port (B2F)	UEPAE	NA	NA	NA	NA	NA	NA	NA	NA	$9.19
NRC - Subsequent Activity	USASC	$10.00	$10.00	$10.00	$10.00	$10.00	$10.00	$10.00	$10.00	$10.00
NRC - Disconnect Charge - 1st										
2- wire voice unbundled port - residence	UEPRL	$6.21	$2.76	NA	NA	$4.38	$6.56	NA	NA	$3.66
2-wire voice unbundled port with caller ID - residence	UEPRC	$6.21	$2.76	NA	NA	$4.38	$6.56	NA	NA	$3.66
2-wire voice unbundled port outgoing only - residence	UEPRO	$6.21	$2.76	NA	NA	$4.38	$6.56	NA	NA	$3.66
2-wire voice grade unbundled Alabama extended local dialing parity port with caller ID	UEPAR	$6.21	NA	NA	NA	NA	NA	NA	NA	NA
2-wire voice grade unbundled Kentucky extended local dialing parity port with caller ID	UEPRM	NA	NA	NA	NA	NA	NA	NA	NA	NA
2-wire voice grade unbundled Louisiana extended local dialing parity port with caller ID	UEPAS	NA	NA	NA	NA	$4.38	NA	NA	NA	NA
2-wire voice grade unbundled Mississippi extended local dialing parity port with caller ID	UEPAT	NA	NA	NA	NA	NA	$6.56	NA	NA	NA
2-wire voice grade unbundled South Carolina extended local dialing parity port with caller ID	UEPAU	NA	NA	NA	NA	NA	NA	NA	NA	NA
2-wire voice grade unbundled Tennessee extended local dialing parity port with caller ID	UEPAQ	NA	NA	NA	NA	NA	NA	NA	NA	$3.66
2-wire voice unbundled Florida area calling with caller ID - residence	UEPAF	NA	$2.76	NA	NA	NA	NA	NA	NA	NA
2-wire voice unbundled Louisiana Area Plus with caller ID - residence (RUL)	UEPAG	NA	NA	NA	NA	$4.38	NA	NA	NA	NA
2-wire voice unbundled Louisiana Area Plus with caller ID - residence (AC7)	UEPAH	NA	NA	NA	NA	$4.38	NA	NA	NA	NA
2-wire voice unbundled South Carolina Area Calling port with Caller ID - residence (LW8)	UEPAJ	NA	NA	NA	NA	NA	NA	NA	NA	NA
2-wire voice unbundled Tennessee Area Calling port with Caller ID - residence (F2R)	UEPAK	NA	NA	NA	NA	NA	NA	NA	NA	$3.66
2-wire voice unbundled Tennessee Area Calling port with Caller ID - residence (TACER)	UEPAL	NA	NA	NA	NA	NA	NA	NA	NA	$3.66
2-wire voice unbundled Tennessee Area Calling port with Caller ID - residence (TACSR)	UEPAM	NA	NA	NA	NA	NA	NA	NA	NA	$3.66
2-wire voice unbundled Tennessee Area Calling port with Caller ID - residence (1MF2X)	UEPAN	NA	NA	NA	NA	NA	NA	NA	NA	$3.66

BELLSOUTH/API RATES
NETWORK ELEMENTS
AND OTHER SERVICES

DESCRIPTION	USOC	AL	FL	GA	KY	LA	MS	NC	SC	TN
2-wire voice unbundled Tennessee Area Calling port with Caller ID - residence (2MR)	UEPAO	NA	NA	NA	NA	NA	NA	NA	NA	$3.66
2-wire voice unbundled Res Low Usage Line Port with Caller ID (LUM)	UEPAP	$6.21	$2.76	NA	NA	$4.38	$6.56	NA	NA	$3.66
2-wire voice unbundled port without Caller ID	UEPBL	$6.21	$2.76	NA	NA	$4.38	$6.56	NA	NA	$3.66
2-wire voice unbundled port with Caller ID	UEPBC	$6.21	$2.76	NA	NA	$4.38	$6.56	NA	NA	$3.66
2-wire voice unbundled outgoing only Port	UEPBO	$6.21	$2.76	NA	NA	$4.38	$6.56	NA	NA	$3.66
2-wire voice grade unbundled Alabama extended local dialing parity port with caller ID	UEPAW	$6.21	NA	NA	NA	NA	NA	NA	NA	NA
2-wire voice grade unbundled Kentucky extended local dialing parity port with caller ID	UEPBM	NA	NA	NA	NA	NA	NA	NA	NA	NA
2-wire voice grade unbundled Louisiana extended local dialing parity port with caller ID	UEPAX	NA	NA	NA	NA	$4.38	NA	NA	NA	NA
2-wire voice grade unbundled Mississippi extended local dialing parity port with caller ID	UEPAY	NA	NA	NA	NA	NA	$6.56	NA	NA	NA
2-wire voice grade unbundled South Carolina extended local dialing parity port with caller ID	UEPAZ	NA	NA	NA	NA	NA	NA	NA	NA	NA
2-wire voice grade unbundled Tennessee extended local dialing parity port with caller ID	UEPAV	NA	NA	NA	NA	NA	NA	NA	NA	$3.66
2-wire voice unbundled Incoming only Port with Caller ID	UEPB1	$6.21	$2.76	NA	NA	$4.38	$6.56	NA	NA	$3.66
2-wire voice unbundled LA Bus Area Calling Port with Caller ID (BUC)	UEPAA	NA	NA	NA	NA	$4.38	NA	NA	NA	NA
2-wire voice unbundles SC Bus Area Calling Port with Caller ID (LMB)	UEPAB	NA	NA	NA	NA	NA	NA	NA	NA	NA
2-wire voice unbundled TN Bus 2-way Area Calling Port Economy Option (TACC1)	UEPAC	NA	NA	NA	NA	NA	NA	NA	NA	$3.66
2-wire voice unbundled TN Bus 2-way Area Calling Port Standard Option (TACC2)	UEPAD	NA	NA	NA	NA	NA	NA	NA	NA	$3.66
2-wire voice unbundled TN Bus 2-Way Collierville and Memphis Local Calling Port (B2F)	UEPAE	NA	NA	NA	NA	NA	NA	NA	NA	$3.66
NRC - Disconnect Charge - Add'l										
2- wire voice unbundled port - residence	UEPRL	$6.21	$2.59	NA	NA	$4.38	$6.56	NA	NA	$2.92
2-wire voice unbundled port with caller ID - residence	UEPRC	$6.21	$2.59	NA	NA	$4.38	$6.56	NA	NA	$2.92
2-wire voice unbundled port outgoing only - residence	UEPRO	$6.21	$2.59	NA	NA	$4.38	$6.56	NA	NA	$2.92
2-wire voice grade unbundled Alabama extended local dialing parity port with caller ID	UEPAR	$6.21	NA	NA	NA	NA	NA	NA	NA	NA
2-wire voice grade unbundled Kentucky extended local dialing parity port with caller ID	UEPRM	NA	NA	NA	NA	NA	NA	NA	NA	NA
2-wire voice grade unbundled Louisiana extended local dialing parity port with caller ID	UEPAS	NA	NA	NA	NA	$4.38	NA	NA	NA	NA
2-wire voice grade unbundled Mississippi extended local dialing parity port with caller ID	UEPAT	NA	NA	NA	NA	NA	$6.56	NA	NA	NA
2-wire voice grade unbundled South Carolina extended local dialing parity port with caller ID	UEPAU	NA	NA	NA	NA	NA	NA	NA	NA	NA
2-wire voice grade unbundled Tennessee extended local dialing parity port with caller ID	UEPAQ	NA	NA	NA	NA	NA	NA	NA	NA	$2.92
2-wire voice unbundled Florida area calling with caller ID - residence	UEPAF	NA	$2.59	NA	NA	NA	NA	NA	NA	NA
2-wire voice unbundled Louisiana Area Plus with caller ID - residence (RUL)	UEPAG	NA	NA	NA	NA	$4.38	NA	NA	NA	NA
2-wire voice unbundled Louisiana Area Plus with caller ID - residence (AC7)	UEPAH	NA	NA	NA	NA	$4.38	NA	NA	NA	NA
2-wire voice unbundled South Carolina Area Calling port with Caller ID - residence (LW8)	UEPAJ	NA	NA	NA	NA	NA	NA	NA	NA	NA
2-wire voice unbundled Tennessee Area Calling port with Caller ID - residence (F2R)	UEPAK	NA	NA	NA	NA	NA	NA	NA	NA	$2.92
2-wire voice unbundled Tennessee Area Calling port with Caller ID - residence (TACER)	UEPAL	NA	NA	NA	NA	NA	NA	NA	NA	$2.92

BELLSOUTH/API RATES
NETWORK ELEMENTS
AND OTHER SERVICES

DESCRIPTION	USOC	AL	FL	GA	KY	LA	MS	NC	SC	TN
2-wire voice unbundled Tennessee Area Calling port with Caller ID - residence (TACSR)	UEPAM	NA	NA	NA	NA	NA	NA	NA	NA	$2.92
2-wire voice unbundled Tennessee Area Calling port with Caller ID - residence (1MF2X)	UEPAN	NA	NA	NA	NA	NA	NA	NA	NA	$2.92
2-wire voice unbundled Tennessee Area Calling port with Caller ID - residence (2MR)	UEPAO	NA	NA	NA	NA	$4.38	$6.56	NA	NA	$2.92
2-wire voice unbundled Res Low Usage Line Port with Caller ID (LUM)	UEPAP	$6.21	$2.59	NA	NA	$4.38	$6.56	NA	NA	$2.92
2-wire voice unbundled port without Caller ID	UEPBL	$6.21	$2.59	NA	NA	$4.38	$6.56	NA	NA	$2.92
2-wire voice unbundled port with Caler ID	UEPBC	$6.21	$2.59	NA	NA	$4.38	$6.56	NA	NA	$2.92
2-wire voice unbundled outgoing only port	UEPBO	$6.21	$2.59	NA	NA	$4.38	$6.56	NA	NA	$2.92
2-wire voice grade unbundled Alabama extended local dialing parity port with caller ID	UEPAW	$6.21	NA	NA	NA	NA	NA	NA	NA	NA
2-wire voice grade unbundled Kentucky extended local dialing parity port with caller ID	UEPBM	NA	NA	NA	NA	NA	NA	NA	NA	NA
2-wire voice grade unbundled Louisiana extended local dialing parity port with caller ID	UEPAX	NA	NA	NA	NA	$4.38	NA	NA	NA	NA
2-wire voice grade unbundled Mississippi extended local dialing parity port with caller ID	UEPAY	NA	NA	NA	NA	NA	$6.56	NA	NA	NA
2-wire voice grade unbundled South Carolina extended local dialing parity port with caller ID	UEPAZ	NA	NA	NA	NA	NA	NA	NA	NA	NA
2-wire voice grade unbundled Tennessee extended local dialing parity port with caller ID	UEPAV	NA	NA	NA	NA	NA	NA	NA	NA	$2.92
2-wire voice unbundled incoming only port with Caller ID	UEPB1	$6.21	$2.59	NA	NA	$4.38	$6.56	NA	NA	$2.92
2-wire voice unbundled LA Bus Area Calling Port with Caller ID (BUC)	UEPAA	NA	NA	NA	NA	$4.38	NA	NA	NA	NA
2-wire voice unbundled SC Bus Area Calling Port with Caller ID (LMB)	UEPAB	NA	NA	NA	NA	NA	NA	NA	NA	NA
2-wire voice unbundled TN Bus 2-way Area Calling Port Economy Option (TACC1)	UEPAC	NA	NA	NA	NA	NA	NA	NA	NA	$2.92
2-wire voice unbundled TN Bus 2-way Area Calling Port Standard Option (TACC2)	UEPAD	NA	NA	NA	NA	NA	NA	NA	NA	$2.92
2-wire voice unbundled TN Bus 2-way Collierville and Memphis Local Calling Port (B2F)	UEPAE	NA	NA	NA	NA	NA	NA	NA	NA	$2.92
NRC - OSS										
NRC - OSS LSR Charge, Electronic, per LSR received from the CLEC by one of the OSS interactive interfaces	SOMEC	$3.50	$3.50	$3.50	$3.50	$3.50	$3.50	$3.50	$3.50	$3.50
NRC - Incremental Charge - Manual Service Order - 1st	SOMAN	$27.37	NA	$18.94	NA	$18.14	$25.52	$26.94	$44.42	$20.35
NRC - Incremental Charge - Manual Service Order - Add'l	SOMAN	$12.97	NA	$8.42	NA	$8.06	$11.34	$12.76	$14.63	$10.54
NRC - Incremental Charge - Manual Service Order - Disconnect - 1st	SOMAN	$17.77	NA	NA	NA	$10.39	$16.06	NA	NA	$13.32
NRC - Incremental Charge - Manual Service Order - Disconnect - Add'l	SOMAN	$1.44	NA	NA	NA	NA	NA	NA	NA	$1.40
All available features, per month	UEPVF	$5.55	$3.40	NA	NA	$8.28	$6.75	NA	$6.29	NA
NRC - 1st (all types)		$24.72	NA	NA	NA	NA	$21.42	NA	$36.24	NA
NRC - Add'l (all types)		$24.72	NA	NA	NA	NA	$21.42	NA	$36.24	NA
NRC - Disconnect Charge - 1st		$18.41	NA	NA	NA	NA	$19.68	NA	NA	NA
NRC - Disconnect Charge - Add'l		$18.41	NA	NA	NA	NA	$19.68	NA	NA	NA
NRC - Incremental Charge - Manual Service Order - 1st	SOMAN	$27.37	NA	NA	NA	NA	$25.52	NA	$44.42	NA
NRC - Incremental Charge - Manual Service Order - Add'l	SOMAN	$12.97	NA	NA	NA	NA	$11.34	NA	$14.63	NA
NRC - Incremental Charge - Manual Service Order - Disconnect - 1st	SOMAN	$17.77	NA	NA	NA	NA	$16.06	NA	NA	NA
NRC - Incremental Charge - Manual Service Order - Disconnect - Add'l	SOMAN	$1.44	NA	NA	NA	NA	NA	NA	NA	NA
Three available feature, per month	UEPVF	NA	NA	NA	NA	$8.28	$3.31	NA	$3.03	NA
NRC - 1st (all types)		NA	NA	NA	NA	NA	$3.06	NA	$4.53	NA
NRC - Add'l (all types)		NA	NA	NA	NA	NA	$3.06	NA	$4.53	NA

BELLSOUTH/API RATES
NETWORK ELEMENTS
AND OTHER SERVICES

DESCRIPTION	USOC	AL	FL	GA	KY	LA	MS	NC	SC	TN
NRC - Disconnect Charge - 1st		NA	NA	NA	NA	NA	$8.20	NA	NA	NA
NRC - Disconnect Charge - Add'l		NA	NA	NA	NA	NA	$8.20	NA	NA	NA
NRC - Incremental Charge - Manual Service Order - 1st	SOMAN	NA	NA	NA	NA	NA	$25.52	NA	$44.42	NA
NRC - Incremental Charge - Manual Service Order - Add'l	SOMAN	NA	NA	NA	NA	NA	$11.34	NA	$14.63	NA
NRC - Incremental Charge - Manual Service Order - Disconnect - 1st	SOMAN	NA	NA	NA	NA	NA	$16.06	NA	NA	NA
NRC - Incremental Charge - Manual Service Order - Disconnect - Add'l	SOMAN	NA	NA	NA	NA	NA	NA	NA	NA	NA
4-Wire Analog VG Port, per month	UEP4A	NA	$8.74	$8.47	NA	$10.13	$9.60	$8.69	$2.28	$11.11
NRC - 1st	UEP4A	NA	$4.76	$17.16	NA	$16.43	$22.98	$21.69	$3.50	$9.93
NRC - Add'l	UEP4A	NA	$4.54	$17.16	NA	$16.43	$22.98	$21.69	$3.50	$9.19
NRC - Disconnect Charge - 1st	BFR	NA	$2.82	NA	NA	$3.77	$6.56	NA	NA	$3.66
NRC - Disconnect Charge - Add'l	BFR	NA	$2.64	NA	NA	$3.77	$6.56	NA	NA	$2.92
NRC - Incremental Charge - Manual Service Order - 1st	SOMAN	NA	$21.56	$18.94	NA	$18.14	$25.52	$26.85	NA	$20.35
NRC - Incremental Charge - Manual Service Order - Add'l	SOMAN	NA	$21.56	$8.42	NA	$8.06	$11.34	$12.67	NA	$10.54
NRC - Incremental Charge - Manual Service Order - Disconnect - 1st	SOMAN	NA	$3.84	NA	NA	$8.94	$16.06	NA	NA	$13.32
NRC - Incremental Charge - Manual Service Order - Disconnect - Add'l	SOMAN	NA	$3.84	NA	NA	$8.94	$16.06	NA	NA	$1.40
2-Wire DID Port, per month	UEPP2	$12.08	$9.38	$11.35	NA	$13.12	$14.63	$12.36	$12.08	$8.97
NRC - 1st	UEPP2	$50.00	$248.44	$61.91	NA	$59.28	$83.09	$81.84	$50.00	$47.75
NRC - Add'l	UEPP2	$18.00	$37.49	$61.91	NA	$59.28	$83.09	$81.84	$50.00	$47.01
NRC - Disconnect Charge - 1st	UEPP2	NA	$113.28	NA	NA	$9.20	$13.48	NA	NA	$9.21
NRC - Disconnect Charge - Add'l	UEPP2	NA	$7.12	NA	NA	$9.20	$13.48	NA	NA	$8.47
NRC - Incremental Charge - Manual Service Order - 1st	SOMAN	NA	$21.56	$18.94	NA	$18.14	$25.52	$26.94	NA	$20.35
NRC - Incremental Charge - Manual Service Order - Add'l	SOMAN	NA	$21.56	$8.42	NA	$8.06	$11.34	$12.76	NA	$10.54
NRC - Incremental Charge - Manual Service Order - Disconnect - 1st	SOMAN	NA	$3.84	NA	NA	$10.39	$16.07	NA	NA	$13.32
NRC - Incremental Charge - Manual Service Order - Disconnect - Add'l	SOMAN	NA	$3.84	NA	NA	$10.39	$16.07	NA	NA	$1.40
4-Wire DS1 Port w/DID capability, per month	UEPDD	$130.23	$63.31	$120.80	NA	$149.27	$146.46	$123.65	$130.23	$120.00
NRC - 1st	UEPDD	$50.00	$413.93	$89.44	NA	$85.63	$117.81	$116.59	$60.00	To be negotiated
NRC - Add'l	UEPDD	$18.00	$191.44	$52.46	NA	$50.23	$71.18	$69.92	$60.00	To be negotiated
NRC - Disconnect Charge - 1st	UEPDD	NA	$137.29	NA	NA	$8.82	$12.94	NA	NA	NA
NRC - Disconnect Charge - Add'l	UEPDD	NA	$4.65	NA	NA	$8.82	$12.94	NA	NA	NA
NRC - Incremental Charge - Manual Service Order - 1st	SOMAN	NA	$21.56	$18.94	NA	$18.14	$25.52	$26.94	NA	NA
NRC - Incremental Charge - Manual Service Order - Add'l	SOMAN	NA	$21.56	$8.42	NA	$8.06	$11.34	$12.76	NA	NA
NRC - Incremental Charge - Manual Service Order - Disconnect - 1st	SOMAN	NA	$3.84	NA	NA	$10.39	$16.06	NA	NA	NA
NRC - Incremental Charge - Manual Service Order - Disconnect - Add'l	SOMAN	NA	$3.84	NA	NA	$10.39	$16.06	NA	NA	NA
2-Wire ISDN Port(2) (3), per month	U1PMA	$16.42	$10.20	$13.47	$12.33	$23.33	$51.91	$24.50	$33.74	NA
NRC - 1st	U1PMA	$63.24	$155.34	$47.37	$90.48	$45.35	$63.59	$62.29	$65.79	NA
NRC - Add'l	U1PMA	$63.24	$106.00	$47.37	$84.53	$45.35	$63.59	$62.29	$65.79	NA
NRC - Disconnect Charge - 1st	U1PMA	$5.69	$93.37	NA	NA	$4.31	$7.04	NA	NA	NA
NRC - Disconnect Charge - Add'l	U1PMA	$5.69	$20.98	NA	NA	$4.31	$7.04	NA	NA	NA
NRC - Incremental Charge - Manual Service Order - 1st	SOMAN	$56.19	$21.56	$39.98	NA	$38.29	$53.87	$55.30	$67.52	NA
NRC - Incremental Charge - Manual Service Order - Add'l	SOMAN	$56.19	$21.56	$39.98	NA	$38.29	$53.87	$55.30	$67.52	NA
NRC - Incremental Charge - Manual Service Order - Disconnect - 1st	SOMAN	$12.97	$3.84	NA	NA	$6.65	$11.34	NA	NA	NA
NRC - Incremental Charge - Manual Service Order - Disconnect - Add'l	SOMAN	$12.97	$3.84	NA	NA	$6.65	$11.34	NA	NA	NA
NRC - User Profile per B Channel **(4)**	U1UMA	NA	NA	NA	$5.61	NA	NA	NA	NA	NA
2-Wire ISDN Port(2) (3) including all available features, per month	U1PMA	NA	NA	NA	NA	NA	NA	NA	$38.68	$18.40
NRC - 1st	U1PMA	NA	NA	NA	NA	NA	NA	NA	$106.40	$30.23
NRC - Add'l	U1PMA	NA	NA	NA	NA	NA	NA	NA	$106.40	$29.49
NRC - Disconnect Charge - 1st	U1PMA	NA	NA	NA	NA	NA	NA	NA	NA	$4.10

BELLSOUTH/API RATES
NETWORK ELEMENTS
AND OTHER SERVICES

DESCRIPTION	USOC	AL	FL	GA	KY	LA	MS	NC	SC	TN
NRC - Disconnect Charge - Add'l	U1PMA	NA	NA	NA	NA	NA	NA	NA	NA	$4.10
NRC - Incremental Charge - Manual Service Order - 1st	SOMAN	NA	NA	NA	NA	NA	NA	NA	$67.52	$41.43
NRC - Incremental Charge - Manual Service Order - Add'l	SOMAN	NA	NA	NA	NA	NA	NA	NA	$67.52	$42.17
NRC - Incremental Charge - Manual Service Order - Disconnect - 1st	SOMAN	NA	NA	NA	NA	NA	NA	NA	NA	$9.80
NRC - Incremental Charge - Manual Service Order - Disconnect - Add'l	SOMAN	NA	NA	NA	NA	NA	NA	NA	NA	$9.80
2-Wire ISDN Port(2) (3) including three available features, per month	U1PMA	NA	NA	NA	NA	NA	NA	NA	$36.01	NA
NRC - 1st	U1PMA	NA	NA	NA	NA	NA	NA	NA	$70.32	NA
NRC - Add'l	U1PMA	NA	NA	NA	NA	NA	NA	NA	$70.32	NA
NRC - Incremental Charge - Manual Service Order - 1st	SOMAN	NA	NA	NA	NA	NA	NA	NA	$67.52	NA
NRC - Incremental Charge - Manual Service Order - Add'l	SOMAN	NA	NA	NA	NA	NA	NA	NA	$67.52	NA
4-Wire ISDN DS1 Port, per month	UEPEX	$186.02	$95.39	$163.16	NA	$194.72	$213.21	$179.75	$214.79	$308.00
NRC - 1st	UEPEX	$244.85	$417.51	$186.80	NA	$181.89	$244.12	$241.63	$278.37	$148.66
NRC - Add'l	UEPEX	$244.85	$203.18	$186.80	NA	$181.89	$244.12	$241.63	$278.37	$147.18
NRC - Disconnect Charge - 1st	UEPEX	$51.19	$149.75	NA	NA	$27.11	$53.32	NA	NA	$38.46
NRC - Disconnect Charge - Add'l	UEPEX	$51.19	$37.93	NA	NA	$27.11	$53.32	NA	NA	$36.98
NRC - Incremental Charge - Manual Service Order - 1st	SOMAN	$54.75	$21.56	$37.88	NA	$33.18	$51.03	$53.89	$65.48	$40.69
NRC - Incremental Charge - Manual Service Order - Add'l	SOMAN	$54.75	$21.56	$37.88	NA	$33.18	$51.03	$53.89	$65.48	$42.17
NRC - Incremental Charge - Manual Service Order - Disconnect - 1st	SOMAN	$11.53	$3.84	NA	NA	$7.73	$8.51	NA	NA	$9.07
NRC - Incremental Charge - Manual Service Order - Disconnect - Add'l	SOMAN	$11.53	$3.84	NA	NA	$7.73	$8.51	NA	NA	$10.54
4-Wire ISDN DS1 Port including all available features, per month	UEPEX	NA	NA	NA	$275.48	NA	NA	NA	$251.00	NA
NRC - 1st	UEPEX	NA	NA	NA	$181.27	NA	NA	NA	$311.73	NA
NRC - Add'l	UEPEX	NA	NA	NA	$116.42	NA	NA	NA	$311.73	NA
NRC - Incremental Charge - Manual Service Order - 1st	SOMAN	NA	NA	NA	NA	NA	NA	NA	$65.48	NA
NRC - Incremental Charge - Manual Service Order - Add'l	SOMAN	NA	NA	NA	NA	NA	NA	NA	$65.48	NA
2-Wire Analog Line Port (PBX), per month										
2 WIRE VOICE UNBUNDLED COMBINATION 2-WAY PBX TRUNK - Residence	UEPRD	$2.07	$1.62	$1.85	$2.61	$2.20	$2.11	$2.18	$2.35	$4.63
LINE SIDE UNBUNDLED COMBINATION 2-WAY PBX TRUNK - BUSINESS	UEPPC	$2.07	$1.62	$1.85	$2.61	$2.20	$2.11	$2.00	$2.35	$4.63
LINE SIDE UNBUNDLED OUTWARD PBX TRUNK - BUSINESS	UEPPO	$2.07	$1.62	$1.85	$2.61	$2.20	$2.11	$2.00	$2.35	$4.63
LINE SIDE UNBUNDLED INCOMING PBX TRUNK - BUSINESS	UEPP1	$2.07	$1.62	$1.85	$2.61	$2.20	$2.11	$2.00	$2.35	$4.63
LONG DISTANCE TERMINAL PBX TRUNK-BUSINESS	UEPLD	$2.07	$1.62	$1.85	$2.61	$2.20	$2.11	$2.00	$2.35	$4.63
TN 2-WAY CALLING PLAN PBX TRUNK - BUSINESS	UEPT2	$2.07	$1.62	$1.85	$2.61	$2.20	$2.11	$2.00	$2.35	$4.63
TN OUTWARD CALLING PLAN PBX TRUNK - BUSINESS	UEPTO	$2.07	$1.62	$1.85	$2.61	$2.20	$2.11	$2.00	$2.35	$4.63
2-WIRE VOICE UNBUNDLED 2-WAY COMBINATION PBX ALABAMA CALLING PORT	UEPA2	$2.07	NA	NA	NA	NA	NA	NA	NA	NA
2-WIRE VOICE UNBUNDLED 2-WAY COMBINATION PBX LOUISIANA CALLING PORT	UEPL2	NA	NA	NA	NA	$2.20	NA	NA	NA	NA
2-WIRE VOICE UNBUNDLED PBX LD TERMINAL PORTS	UEPLD	$2.07	$1.62	$1.85	$2.61	$2.20	$2.11	$2.00	$2.35	$4.63
2-WIRE VOICE UNBUNDLED 2-WAY COMBINATION PBX TENNESSEE CALLING PORT	UEPT2	NA	NA	NA	NA	NA	NA	NA	NA	$4.63
2-WIRE VOICE UNBUNDLED 1-WAY OUTGOING PBX TENNESSEE CALLING PORT	UEPTO	NA	NA	NA	NA	NA	NA	NA	NA	$4.63
2-WIRE VOICE UNBUNDLED 2-WAY COMBINATION PBX USAGE PORT	UEPXA	$2.07	$1.62	$1.85	$2.61	$2.20	$2.11	$2.00	$2.35	$4.63
2-WIRE VOICE UNBUNDLED PBX TOLL TERMINAL HOTEL PORTS	UEPXB	$2.07	$1.62	$1.85	$2.61	$2.20	$2.11	$2.00	$2.35	$4.63
2-WIRE VOICE UNBUNDLED PBX LD DDD TERMINALS PORT	UEPXC	$2.07	$1.62	$1.85	$2.61	$2.20	$2.11	$2.00	$2.35	$4.63
2-WIRE VOICE UNBUNDLED PBX LD TERMINAL SWITCHBOARD PORT	UEPXD	$2.07	$1.62	$1.85	$2.61	$2.20	$2.11	$2.00	$2.35	$4.63
2-WIRE VOICE UNBUNDLED PBX LD TERMINAL SWITCHBOARD IDD CAPABLE PORT	UEPXE	$2.07	$1.62	$1.85	$2.61	$2.20	$2.11	$2.00	$2.35	$4.63
2-WIRE VOICE UNBUNDLED 2-WAY PBX KENTUCKY ROOM AREA CALLING PORT WITHOUT LUD	UEPXF	NA	NA	NA	$2.61	NA	NA	NA	NA	NA
2-WIRE VOICE UNBUNDLED PBX KENTUCKY LUD AREA CALLING PORT	UEPXG	NA	NA	NA	$2.61	NA	NA	NA	NA	NA

BELLSOUTH/API RATES
NETWORK ELEMENTS
AND OTHER SERVICES

DESCRIPTION	USOC	AL	FL	GA	KY	LA	MS	NC	SC	TN
2-WIRE VOICE UNBUNDLED PBX KENTUCKY PREMIUM CALLING PORT	UEPXH	NA	NA	NA	$2.61	NA	NA	NA	NA	NA
2-WIRE VOICE UNBUNDLED 2-WAY KENTUCKY AREA CALLING PORT WITHOUT LUD	UEPXJ	NA	NA	NA	$2.61	NA	NA	NA	NA	NA
2-WIRE VOICE UNBUNDLED 2-WAY PBX LOUISIANA LOCAL OPTIONAL CALLING PORT	UEPXK	NA	NA	NA	NA	$2.20	NA	NA	NA	NA
2-WIRE VOICE UNBUNDLED 2-WAY PBX HOTEL/HOSPITAL ECONOMY ADMINISTRATIVE CALLING PORT	UEPXL	$2.07	$1.62	$1.85	$2.61	$2.20	$2.11	$2.00	$2.35	$4.63
2-WIRE VOICE UNBUNDLED 2-WAY PBX HOTEL/HOSPITAL ECONOMY ROOM CALLING PORT	UEPXM	$2.07	$1.62	$1.85	$2.61	$2.20	$2.11	$2.00	$2.35	$4.63
2-WIRE VOICE UNBUNDLED 1-WAY OUTGOING PBX HOTEL/HOSPITAL ECONOMY ADMINIATRATIVE CALLING PORTTENNESSEE CALLING PORT	UEPXN	NA	NA	NA	NA	NA	NA	NA	NA	$4.63
2-WIRE VOICE UNBUNDLED 1-WAY OUTGOING PBX HOTEL/HOSPITAL DIACOUNT ROOM CALLING PORT	UEPXO	$2.07	$1.62	$1.85	$2.61	$2.20	$2.11	$2.00	$2.35	$4.63
2-WIRE VOICE UNBUNDLED 1-WAY OUTGOING PBX LOUISIANA LOCAL DISCOUNT CALLING PORT	UEPXP	NA	NA	NA	NA	$2.20	NA	NA	NA	NA
2-WIRE VOICE UNBUNDLED 2-WAY PBX MISSISSIPPI LOCAL ECONOMY CALLING PORT	UEPXQ	NA	NA	NA	NA	NA	$2.11	NA	NA	NA
2-WIRE VOICE UNBUNDLED 2-WAY PBX MISSISSIPPI LOCAL OPTIONAL CALLING PORT	UEPXR	NA	NA	NA	NA	NA	$2.11	NA	NA	NA
2-WIRE VOICE UNBUNDLED 1-WAY OUTGOING PBXMEASURED PORT	UEPXS	$2.07	$1.62	$1.85	$2.61	$2.20	$2.11	$2.00	$2.35	$4.63
2-WIRE VOICE UNBUNDLED 2-WAY PBX SOUTH CAROLINA AREA PLUS CALLING PORT	UEPXT	NA	NA	NA	NA	NA	NA	NA	$2.35	NA
2-WIRE VOICE UNBUNDLED PBX COLLIERVILLE & MEMPHIS CALLING PORT	UEPXU	NA	NA	NA	NA	NA	NA	NA	NA	$4.63
2-WIRE VOICE UNBUNDLED 2-WAY PBX TENNESSEE REGIONSERV CALLING PORT	UEPXV	NA	NA	NA	NA	NA	NA	NA	NA	$4.63
UNBUNDLED LOOP BILLING USOC (REQUIRES ONE PER PORT)	UEPLX									
LOCAL NUMBER PORTABILITY (REQUIRES ONE PER PORT)	LNPCP									
NRC - 1st	UEPPC	$21.93	$62.56	$17.16	$36.47	$16.43	$22.98	$24.04	$24.36	$9.93
2 WIRE VOICE UNBUNDLED COMBINATION 2-WAY PBX TRUNK - Residence	UEPRD	$21.93	$62.56	$17.16	$36.47	$16.43	$22.98	$21.60	$24.36	$9.93
LINE SIDE UNBUNDLED COMBINATION 2-WAY PBX TRUNK - BUSINESS	UEPPC	$21.93	$62.56	$17.16	$36.47	$16.43	$22.98	$24.04	$24.36	$9.93
LINE SIDE UNBUNDLED OUTWARD PBX TRUNK - BUSINESS	UEPPO	$21.93	$62.56	$17.16	$36.47	$16.43	$22.98	$24.04	$24.36	$9.93
LINE SIDE UNBUNDLED INCOMING PBX TRUNK - BUSINESS	UEPP1	$21.93	$62.56	$17.16	$36.47	$16.43	$22.98	$24.04	$24.36	$9.93
LONG DISTANCE TERMINAL PBX TRUNK-BUSINESS	UEPLD	$21.93	$62.56	$17.16	$36.47	$16.43	$22.98	$24.04	$24.36	$9.93
TN 2-WAY CALLING PLAN PBX TRUNK - BUSINESS	UEPT2	$21.93	$62.56	$17.16	$36.47	$16.43	$22.98	$24.04	$24.36	$9.93
TN OUTWARD CALLING PLAN PBX TRUNK - BUSINESS	UEPTO	$21.93	$62.56	$17.16	$36.47	$16.43	$22.98	$24.04	$24.36	$9.93
2-WIRE VOICE UNBUNDLED 2-WAY COMBINATION PBX ALABAMA CALLING PORT	UEPA2	$21.93	NA	NA	NA	NA	NA	NA	NA	NA
2-WIRE VOICE UNBUNDLED 2-WAY COMBINATION PBX LOUISIANA CALLING PORT	UEPL2	NA	NA	NA	NA	$16.43	NA	NA	NA	NA
2-WIRE VOICE UNBUNDLED PBX LD TERMINAL PORTS	UEPLD	$21.93	$62.56	$17.16	$36.47	$16.43	$22.98	$24.04	$24.36	NA
2-WIRE VOICE UNBUNDLED 2-WAY COMBINATION PBX TENNESSEE CALLING PORT	UEPT2	NA	NA	NA	NA	NA	NA	NA	NA	$9.93
2-WIRE VOICE UNBUNDLED 1-WAY OUTGOING PBX TENNESSEE CALLING PORT	UEPTO	NA	NA	NA	NA	NA	NA	NA	NA	$9.93
2-WIRE VOICE UNBUNDLED 2-WAY COMBINATION PBX USAGE PORT	UEPXA	$21.93	$62.56	$17.16	$36.47	$16.43	$22.98	$24.04	$24.36	$9.93
2-WIRE VOICE UNBUNDLED PBX TOLL TERMINAL HOTEL PORTS	UEPXB	$21.93	$62.56	$17.16	$36.47	$16.43	$22.98	$24.04	$24.36	$9.93
2-WIRE VOICE UNBUNDLED PBX LD DDD TERMINALS PORT	UEPXC	$21.93	$62.56	$17.16	$36.47	$16.43	$22.98	$24.04	$24.36	$9.93
2-WIRE VOICE UNBUNDLED PBX LD TERMINAL SWITCHBOARD PORT	UEPXD	$21.93	$62.56	$17.16	$36.47	$16.43	$22.98	$24.04	$24.36	$9.93

BELLSOUTH/API RATES
NETWORK ELEMENTS
AND OTHER SERVICES

DESCRIPTION	USOC	AL	FL	GA	KY	LA	MS	NC	SC	TN
2-WIRE VOICE UNBUNDLED PBX LD TERMINAL SWITCHBOARD IDD CAPABLE PORT	UEPXE	$21.93	$62.56	$17.16	$36.47	$16.43	$22.98	$24.04	$24.36	$9.93
2-WIRE VOICE UNBUNDLED 2-WAY PBX KENTUCKY ROOM AREA CALLING PORT WITHOUT LUD	UEPXF	NA	NA	NA	$36.47	NA	NA	NA	NA	NA
2-WIRE VOICE UNBUNDLED PBX KENTUCKY LUD AREA CALLING PORT	UEPXG	NA	NA	NA	$36.47	NA	NA	NA	NA	NA
2-WIRE VOICE UNBUNDLED PBX KENTUCKY PREMIUM CALLING PORT	UEPXH	NA	NA	NA	$36.47	NA	NA	NA	NA	NA
2-WIRE VOICE UNBUNDLED 2-WAY KENTUCKY AREA CALLING PORT WITHOUT LUD	UEPXJ	NA	NA	NA	$36.47	NA	NA	NA	NA	NA
2-WIRE VOICE UNBUNDLED 2-WAY PBX LOUISIANA LOCAL OPTIONAL CALLING PORT	UEPXK	NA	NA	NA	NA	$16.43	NA	NA	NA	NA
2-WIRE VOICE UNBUNDLED 2-WAY PBX HOTEL/HOSPITAL ECONOMY ADMINISTRATIVE CALLING PORT	UEPXL	$21.93	$62.56	$17.16	$36.47	$16.43	$22.98	$24.04	$24.36	$9.93
2-WIRE VOICE UNBUNDLED 2-WAY PBX HOTEL/HOSPITAL ECONOMY ROOM CALLING PORT	UEPXM	$21.93	$62.56	$17.16	$36.47	$16.43	$22.98	$24.04	$24.36	$9.93
2-WIRE VOICE UNBUNDLED 1-WAY OUTGOING PBX HOTEL/HOSPITAL ECONOMY ADMINIATRATIVE CALLING PORTTENNESSEE CALLING PORT	UEPXN	NA	NA	NA	NA	NA	NA	NA	NA	$9.93
2-WIRE VOICE UNBUNDLED 1-WAY OUTGOING PBX HOTEL/HOSPITAL DIACOUNT ROOM CALLING PORT	UEPXO	$21.93	$62.56	$17.16	$36.47	$16.43	$22.98	$24.04	$24.36	$9.93
2-WIRE VOICE UNBUNDLED 1-WAY OUTGOING PBX LOUISIANA LOCAL DISCOUNT CALLING PORT	UEPXP	NA	NA	NA	NA	$16.43	NA	NA	NA	NA
2-WIRE VOICE UNBUNDLED 2-WAY PBX MISSISSIPPI LOCAL ECONOMY CALLING PORT	UEPXQ	NA	NA	NA	NA	NA	$22.98	NA	NA	NA
2-WIRE VOICE UNBUNDLED 2-WAY PBX MISSISSIPPI LOCAL OPTIONAL CALLING PORT	UEPXR	NA	NA	NA	NA	NA	$22.98	NA	NA	NA
2-WIRE VOICE UNBUNDLED 1-WAY OUTGOING PBXMEASURED PORT	UEPXS	$21.93	$62.56	$17.16	$36.47	$16.43	$22.98	$24.04	$24.36	$9.93
2-WIRE VOICE UNBUNDLED 2-WAY PBX SOUTH CAROLINA AREA PLUS CALLING PORT	UEPXT	NA	NA	NA	NA	NA	NA	NA	$24.36	NA
2-WIRE VOICE UNBUNDLED PBX COLLIERVILLE & MEMPHIS CALLING PORT	UEPXU	NA	NA	NA	NA	NA	NA	NA	NA	$9.93
2-WIRE VOICE UNBUNDLED 2-WAY PBX TENNESSEE REGIONSERV CALLING PORT	UEPXV	NA	NA	NA	NA	NA	NA	NA	NA	$9.93
Subsequent Activity	USASC	$10.00	$10.00	$10.00	$10.00	$10.00	$10.00	$10.00	$10.00	$10.00
NRC - Add'l										
2 WIRE VOICE UNBUNDLED COMBINATION 2-WAY PBX TRUNK - Residence	UEPRD	$21.93	$29.70	$17.16	$36.47	$16.43	$22.98	$21.60	$24.36	$9.19
LINE SIDE UNBUNDLED COMBINATION 2-WAY PBX TRUNK - BUSINESS	UEPPC	$21.93	$29.70	$17.16	$36.47	$16.43	$22.98	$9.05	$24.36	$9.19
LINE SIDE UNBUNDLED OUTWARD PBX TRUNK - BUSINESS	UEPPO	$21.93	$29.70	$17.16	$36.47	$16.43	$22.98	$9.05	$24.36	$9.19
LINE SIDE UNBUNDLED INCOMING PBX TRUNK - BUSINESS	UEPP1	$21.93	$29.70	$17.16	$36.47	$16.43	$22.98	$9.05	$24.36	$9.19
LONG DISTANCE TERMINAL PBX TRUNK-BUSINESS	UEPLD	$21.93	$29.70	$17.16	$36.47	$16.43	$22.98	$9.05	$24.36	$9.19
TN 2-WAY CALLING PLAN PBX TRUNK - BUSINESS	UEPT2	$21.93	$29.70	$17.16	$36.47	$16.43	$22.98	$9.05	$24.36	$9.19
TN OUTWARD CALLING PLAN PBX TRUNK - BUSINESS	UEPTO	$21.93	$29.70	$17.16	$36.47	$16.43	$22.98	$9.05	$24.36	$9.19
2-WIRE VOICE UNBUNDLED 2-WAY COMBINATION PBX ALABAMA CALLING PORT	UEPA2	$21.93	NA	NA	NA	NA	NA	NA	NA	NA
2-WIRE VOICE UNBUNDLED 2-WAY COMBINATION PBX LOUISIANA CALLING PORT	UEPL2	NA	NA	NA	NA	$16.43	NA	NA	NA	NA
2-WIRE VOICE UNBUNDLED PBX LD TERMINAL PORTS	UEPLD	$21.93	$29.70	$17.16	$36.47	$16.43	$22.98	$9.05	$24.36	$9.19
2-WIRE VOICE UNBUNDLED 2-WAY COMBINATION PBX TENNESSEE CALLING PORT	UEPT2	NA	NA	NA	NA	NA	NA	NA	NA	$9.19
2-WIRE VOICE UNBUNDLED 1-WAY OUTGOING PBX TENNESSEE CALLING PORT	UEPTO	NA	NA	NA	NA	NA	NA	NA	NA	$9.19
2-WIRE VOICE UNBUNDLED 2-WAY COMBINATION PBX USAGE PORT	UEPXA	$21.93	$29.70	$17.16	$36.47	$16.43	$22.98	$9.05	$24.36	$9.19
2-WIRE VOICE UNBUNDLED PBX TOLL TERMINAL HOTEL PORTS	UEPXB	$21.93	$29.70	$17.16	$36.47	$16.43	$22.98	$9.05	$24.36	$9.19

BELLSOUTH/API RATES
NETWORK ELEMENTS
AND OTHER SERVICES

DESCRIPTION	USOC	AL	FL	GA	KY	LA	MS	NC	SC	TN
2-WIRE VOICE UNBUNDLED PBX LD DDD TERMINALS PORT	UEPXC	$21.93	$29.70	$17.16	$36.47	$16.43	$22.98	$9.05	$24.36	$9.19
2-WIRE VOICE UNBUNDLED PBX LD TERMINAL SWITCHBOARD PORT	UEPXD	$21.93	$29.70	$17.16	$36.47	$16.43	$22.98	$9.05	$24.36	$9.19
2-WIRE VOICE UNBUNDLED PBX LD TERMINAL SWITCHBOARD IDD CAPABLE PORT	UEPXE	$21.93	$29.70	$17.16	$36.47	$16.43	$22.98	$9.05	$24.36	$9.19
2-WIRE VOICE UNBUNDLED 2-WAY PBX KENTUCKY ROOM AREA CALLING PORT WITHOUT LUD	UEPXF	NA	NA	NA	$36.47	NA	NA	NA	NA	NA
2-WIRE VOICE UNBUNDLED PBX KENTUCKY LUD AREA CALLING PORT	UEPXG	NA	NA	NA	$37.47	NA	NA	NA	NA	NA
2-WIRE VOICE UNBUNDLED PBX KENTUCKY PREMIUM CALLING PORT	UEPXH	NA	NA	NA	$38.47	NA	NA	NA	NA	NA
2-WIRE VOICE UNBUNDLED 2-WAY KENTUCKY AREA CALLING PORT WITHOUT LUD	UEPXJ	NA	NA	NA	$39.47	NA	NA	NA	NA	NA
2-WIRE VOICE UNBUNDLED 2-WAY PBX LOUISIANA LOCAL OPTIONAL CALLING PORT	UEPXK	NA	NA	NA	NA	$16.43	NA	NA	NA	NA
2-WIRE VOICE UNBUNDLED 2-WAY PBX HOTEL/HOSPITAL ECONOMY ADMINISTRATIVE CALLING PORT	UEPXL	$21.93	$29.70	$17.16	$36.47	$16.43	$22.98	$9.05	$24.36	$9.19
2-WIRE VOICE UNBUNDLED 2-WAY PBX HOTEL/HOSPITAL ECONOMY ROOM CALLING PORT	UEPXM	$21.93	$29.70	$17.16	$36.47	$16.43	$22.98	$9.05	$24.36	$9.19
2-WIRE VOICE UNBUNDLED 1-WAY OUTGOING PBX HOTEL/HOSPITAL ECONOMY ADMINIATRATIVE CALLING PORTTENNESSEE CALLING PORT	UEPXN	NA	NA	NA	NA	NA	NA	NA	NA	$9.19
2-WIRE VOICE UNBUNDLED 1-WAY OUTGOING PBX HOTEL/HOSPITAL DIACOUNT ROOM CALLING PORT	UEPXO	$21.93	$29.70	$17.16	$36.47	$16.43	$22.98	$9.05	$24.36	$9.19
2-WIRE VOICE UNBUNDLED 1-WAY OUTGOING PBX LOUISIANA LOCAL DISCOUNT CALLING PORT	UEPXP	NA	NA	NA	NA	$16.43	NA	NA	NA	NA
2-WIRE VOICE UNBUNDLED 2-WAY PBX MISSISSIPPI LOCAL ECONOMY CALLING PORT	UEPXQ	NA	NA	NA	NA	NA	$22.98	NA	NA	NA
2-WIRE VOICE UNBUNDLED 2-WAY PBX MISSISSIPPI LOCAL OPTIONAL CALLING PORT	UEPXR	NA	NA	NA	NA	NA	$22.98	NA	NA	NA
2-WIRE VOICE UNBUNDLED 1-WAY OUTGOING PBXMEASURED PORT	UEPXS	$21.93	$29.70	$17.16	$36.47	$16.43	$22.98	$9.05	$24.36	$9.19
2-WIRE VOICE UNBUNDLED 2-WAY PBX SOUTH CAROLINA AREA PLUS CALLING PORT	UEPXT	NA	NA	NA	NA	NA	NA	NA	$24.36	NA
2-WIRE VOICE UNBUNDLED PBX COLLIERVILLE & MEMPHIS CALLING PORT	UEPXU	NA	NA	NA	NA	NA	NA	NA	NA	$9.19
2-WIRE VOICE UNBUNDLED 2-WAY PBX TENNESSEE REGIONSERV CALLING PORT	UEPXV	NA	NA	NA	NA	NA	NA	NA	NA	$9.19
NRC - Disconnect Charge - 1st										
2 WIRE VOICE UNBUNDLED COMBINATION 2-WAY PBX TRUNK - Residence	UEPRD	$6.21	$26.37	NA	NA	$3.77	$6.56	NA	NA	$3.66
LINE SIDE UNBUNDLED COMBINATION 2-WAY PBX TRUNK - BUSINESS	UEPPC	$6.21	$26.37	NA	NA	$3.77	$6.56	NA	NA	$3.66
LINE SIDE UNBUNDLED OUTWARD PBX TRUNK - BUSINESS	UEPPO	$6.21	$26.37	NA	NA	$3.77	$6.56	NA	NA	$3.66
LINE SIDE UNBUNDLED INCOMING PBX TRUNK - BUSINESS	UEPP1	$6.21	$26.37	NA	NA	$3.77	$6.56	NA	NA	$3.66
LONG DISTANCE TERMINAL PBX TRUNK-BUSINESS	UEPLD	$6.21	$26.37	NA	NA	$3.77	$6.56	NA	NA	$3.66
TN 2-WAY CALLING PLAN PBX TRUNK - BUSINESS	UEPT2	$6.21	$26.37	NA	NA	$3.77	$6.56	NA	NA	$3.66
TN OUTWARD CALLING PLAN PBX TRUNK - BUSINESS	UEPTO	$6.21	$26.37	NA	NA	$3.77	$6.56	NA	NA	$3.66
2-WIRE VOICE UNBUNDLED 2-WAY COMBINATION PBX ALABAMA CALLING PORT	UEPA2	$6.21	NA	NA	NA	NA	NA	NA	NA	NA
2-WIRE VOICE UNBUNDLED 2-WAY COMBINATION PBX LOUISIANA CALLING PORT	UEPL2	NA	NA	NA	NA	$3.77	NA	NA	NA	NA
2-WIRE VOICE UNBUNDLED PBX LD TERMINAL PORTS	UEPLD	$6.21	$26.37	NA	NA	$3.77	$6.56	NA	NA	$3.66
2-WIRE VOICE UNBUNDLED 2-WAY COMBINATION PBX TENNESSEE CALLING PORT	UEPT2	NA	NA	NA	NA	NA	NA	NA	NA	$3.66
2-WIRE VOICE UNBUNDLED 1-WAY OUTGOING PBX TENNESSEE CALLING PORT	UEPTO	NA	NA	NA	NA	NA	NA	NA	NA	$3.66
2-WIRE VOICE UNBUNDLED 2-WAY COMBINATION PBX USAGE PORT	UEPXA	$6.21	$26.37	NA	NA	$3.77	$6.56	NA	NA	$3.66
2-WIRE VOICE UNBUNDLED PBX TOLL TERMINAL HOTEL PORTS	UEPXB	$6.21	$26.37	NA	NA	$3.77	$6.56	NA	NA	$3.66

BELLSOUTH/API RATES
NETWORK ELEMENTS
AND OTHER SERVICES

DESCRIPTION	USOC	AL	FL	GA	KY	LA	MS	NC	SC	TN
2-WIRE VOICE UNBUNDLED PBX LD DDD TERMINALS PORT	UEPXC	$6.21	$26.37	NA	NA	$3.77	$6.56	NA	NA	$3.66
2-WIRE VOICE UNBUNDLED PBX LD TERMINAL SWITCHBOARD PORT	UEPXD	$6.21	$26.37	NA	NA	$3.77	$6.56	NA	NA	$3.66
2-WIRE VOICE UNBUNDLED PBX LD TERMINAL SWITCHBOARD IDD CAPABLE PORT	UEPXE	$6.21	$26.37	NA	NA	$3.77	$6.56	NA	NA	$3.66
2-WIRE VOICE UNBUNDLED 2-WAY PBX KENTUCKY ROOM AREA CALLING PORT WITHOUT LUD	UEPXF	NA	NA	NA	NA	NA	NA	NA	NA	NA
2-WIRE VOICE UNBUNDLED PBX KENTUCKY LUD AREA CALLING PORT	UEPXG	NA	NA	NA	NA	NA	NA	NA	NA	NA
2-WIRE VOICE UNBUNDLED PBX KENTUCKY PREMIUM CALLING PORT	UEPXH	NA	NA	NA	NA	NA	NA	NA	NA	NA
2-WIRE VOICE UNBUNDLED 2-WAY KENTUCKY AREA CALLING PORT WITHOUT LUD	UEPXJ	NA	NA	NA	NA	NA	NA	NA	NA	NA
2-WIRE VOICE UNBUNDLED 2-WAY PBX LOUISIANA LOCAL OPTIONAL CALLING PORT	UEPXK	NA	NA	NA	NA	$3.77	NA	NA	NA	NA
2-WIRE VOICE UNBUNDLED 2-WAY PBX HOTEL/HOSPITAL ECONOMY ADMINISTRATIVE CALLING PORT	UEPXL	$6.21	$26.37	NA	NA	$3.77	$6.56	NA	NA	$3.66
2-WIRE VOICE UNBUNDLED 2-WAY PBX HOTEL/HOSPITAL ECONOMY ROOM CALLING PORT	UEPXM	$6.21	$26.37	NA	NA	$3.77	$6.56	NA	NA	$3.66
2-WIRE VOICE UNBUNDLED 1-WAY OUTGOING PBX HOTEL/HOSPITAL ECONOMY ADMINIATRATIVE CALLING PORTTENNESSEE CALLING PORT	UEPXN	NA	$26.37	NA	NA	NA	NA	NA	NA	$3.66
2-WIRE VOICE UNBUNDLED 1-WAY OUTGOING PBX HOTEL/HOSPITAL DIACOUNT ROOM CALLING PORT	UEPXO	$6.21	$26.37	NA	NA	$3.77	$6.56	NA	NA	$3.66
2-WIRE VOICE UNBUNDLED 1-WAY OUTGOING PBX LOUISIANA LOCAL DISCOUNT CALLING PORT	UEPXP	$6.21	NA	NA	NA	$3.77	$6.56	NA	NA	NA
2-WIRE VOICE UNBUNDLED 2-WAY PBX MISSISSIPPI LOCAL ECONOMY CALLING PORT	UEPXQ	NA	NA	NA	NA	NA	$6.56	NA	NA	NA
2-WIRE VOICE UNBUNDLED 2-WAY PBX MISSISSIPPI LOCAL OPTIONAL CALLING PORT	UEPXR	NA	NA	NA	NA	NA	$6.56	NA	NA	NA
2-WIRE VOICE UNBUNDLED 1-WAY OUTGOING PBXMEASURED PORT	UEPXS	$6.21	$26.37	NA	NA	$3.77	$6.56	NA	NA	$3.66
2-WIRE VOICE UNBUNDLED 2-WAY PBX SOUTH CAROLINA AREA PLUS CALLING PORT	UEPXT	NA	NA	NA	NA	NA	NA	NA	NA	NA
2-WIRE VOICE UNBUNDLED PBX COLLIERVILLE & MEMPHIS CALLING PORT	UEPXU	NA	NA	NA	NA	NA	NA	NA	NA	$3.66
2-WIRE VOICE UNBUNDLED 2-WAY PBX TENNESSEE REGIONSERV CALLING PORT	UEPXV	NA	NA	NA	NA	NA	NA	NA	NA	$3.66
NRC - Disconnect Charge - Add'l										
2 WIRE VOICE UNBUNDLED COMBINATION 2-WAY PBX TRUNK - Residence	UEPRD	$6.21	$1.69	NA	NA	$3.77	$6.56	NA	NA	$2.92
LINE SIDE UNBUNDLED COMBINATION 2-WAY PBX TRUNK - BUSINESS	UEPPC	$6.21	$1.69	NA	NA	$3.77	$6.56	NA	NA	$2.92
LINE SIDE UNBUNDLED OUTWARD PBX TRUNK - BUSINESS	UEPPO	$6.21	$1.69	NA	NA	$3.77	$6.56	NA	NA	$2.92
LINE SIDE UNBUNDLED INCOMING PBX TRUNK - BUSINESS	UEPP1	$6.21	$1.69	NA	NA	$3.77	$6.56	NA	NA	$2.92
LONG DISTANCE TERMINAL PBX TRUNK-BUSINESS	UEPLD	$6.21	$1.69	NA	NA	$3.77	$6.56	NA	NA	$2.92
TN 2-WAY CALLING PLAN PBX TRUNK - BUSINESS	UEPT2	$6.21	$1.69	NA	NA	$3.77	$6.56	NA	NA	$2.92
TN OUTWARD CALLING PLAN PBX TRUNK - BUSINESS	UEPTO	$6.21	$1.69	NA	NA	$3.77	$6.56	NA	NA	$2.92
2-WIRE VOICE UNBUNDLED 2-WAY COMBINATION PBX ALABAMA CALLING PORT	UEPA2	$6.21	NA	NA	NA	NA	NA	NA	NA	NA
2-WIRE VOICE UNBUNDLED 2-WAY COMBINATION PBX LOUISIANA CALLING PORT	UEPL2	NA	NA	NA	NA	$3.77	NA	NA	NA	NA
2-WIRE VOICE UNBUNDLED PBX LD TERMINAL PORTS	UEPLD	$6.21	$1.69	NA	NA	$3.77	$6.56	NA	NA	$2.92
2-WIRE VOICE UNBUNDLED 2-WAY COMBINATION PBX TENNESSEE CALLING PORT	UEPT2	NA	NA	NA	NA	NA	NA	NA	NA	$2.92
2-WIRE VOICE UNBUNDLED 1-WAY OUTGOING PBX TENNESSEE CALLING PORT	UEPTO	NA	NA	NA	NA	NA	NA	NA	NA	$2.92
2-WIRE VOICE UNBUNDLED 2-WAY COMBINATION PBX USAGE PORT	UEPXA	$6.21	$1.69	NA	NA	$3.77	$6.56	NA	NA	$2.92
2-WIRE VOICE UNBUNDLED PBX TOLL TERMINAL HOTEL PORTS	UEPXB	$6.21	$1.69	NA	NA	$3.77	$6.56	NA	NA	$2.92

BELLSOUTH/API RATES
NETWORK ELEMENTS
AND OTHER SERVICES

DESCRIPTION	USOC	AL	FL	GA	KY	LA	MS	NC	SC	TN
2-WIRE VOICE UNBUNDLED PBX LD DDD TERMINALS PORT	UEPXC	$6.21	$1.69	NA	NA	$3.77	$6.56	NA	NA	$2.92
2-WIRE VOICE UNBUNDLED PBX LD TERMINAL SWITCHBOARD PORT	UEPXD	$6.21	$1.69	NA	NA	$3.77	$6.56	NA	NA	$2.92
2-WIRE VOICE UNBUNDLED PBX LD TERMINAL SWITCHBOARD IDD CAPABLE PORT	UEPXE	$6.21	$1.69	NA	NA	$3.77	$6.56	NA	NA	$2.92
2-WIRE VOICE UNBUNDLED 2-WAY PBX KENTUCKY ROOM AREA CALLING PORT WITHOUT LUD	UEPXF	NA	NA	NA	NA	NA	NA	NA	NA	NA
2-WIRE VOICE UNBUNDLED PBX KENTUCKY LUD AREA CALLING PORT	UEPXG	NA	NA	NA	NA	NA	NA	NA	NA	NA
2-WIRE VOICE UNBUNDLED PBX KENTUCKY PREMIUM CALLING PORT	UEPXH	NA	NA	NA	NA	NA	NA	NA	NA	NA
2-WIRE VOICE UNBUNDLED 2-WAY KENTUCKY AREA CALLING PORT WITHOUT LUD	UEPXJ	NA	NA	NA	NA	NA	NA	NA	NA	NA
2-WIRE VOICE UNBUNDLED 2-WAY PBX LOUISIANA LOCAL OPTIONAL CALLING PORT	UEPXK	NA	NA	NA	NA	$3.77	NA	NA	NA	NA
2-WIRE VOICE UNBUNDLED 2-WAY PBX HOTEL/HOSPITAL ECONOMY ADMINISTRATIVE CALLING PORT	UEPXL	$6.21	$1.69	NA	NA	$3.77	$6.56	NA	NA	$2.92
2-WIRE VOICE UNBUNDLED 2-WAY PBX HOTEL/HOSPITAL ECONOMY ROOM CALLING PORT	UEPXM	$6.21	$1.69	NA	NA	$3.77	$6.56	NA	NA	$2.92
2-WIRE VOICE UNBUNDLED 1-WAY OUTGOING PBX HOTEL/HOSPITAL ECONOMY ADMINIATRATIVE CALLING PORTTENNESSEE CALLING PORT	UEPXN	NA	NA	NA	NA	NA	NA	NA	NA	$2.92
2-WIRE VOICE UNBUNDLED 1-WAY OUTGOING PBX HOTEL/HOSPITAL DIACOUNT ROOM CALLING PORT	UEPXO	$6.21	$1.69	NA	NA	$3.77	$6.56	NA	NA	$2.92
2-WIRE VOICE UNBUNDLED 1-WAY OUTGOING PBX LOUISIANA LOCAL DISCOUNT CALLING PORT	UEPXP	$6.21	NA	NA	NA	$3.77	$6.56	NA	NA	NA
2-WIRE VOICE UNBUNDLED 2-WAY PBX MISSISSIPPI LOCAL ECONOMY CALLING PORT	UEPXQ	NA	NA	NA	NA	NA	$6.56	NA	NA	NA
2-WIRE VOICE UNBUNDLED 2-WAY PBX MISSISSIPPI LOCAL OPTIONAL CALLING PORT	UEPXR	NA	NA	NA	NA	NA	$6.56	NA	NA	NA
2-WIRE VOICE UNBUNDLED 1-WAY OUTGOING PBXMEASURED PORT	UEPXS	$6.21	$1.69	NA	NA	$3.77	$6.56	NA	NA	$2.92
2-WIRE VOICE UNBUNDLED 2-WAY PBX SOUTH CAROLINA AREA PLUS CALLING PORT	UEPXT	NA	NA	NA	NA	NA	NA	NA	NA	NA
2-WIRE VOICE UNBUNDLED PBX COLLIERVILLE & MEMPHIS CALLING PORT	UEPXU	NA	NA	NA	NA	NA	NA	NA	NA	$2.92
2-WIRE VOICE UNBUNDLED 2-WAY PBX TENNESSEE REGIONSERV CALLING PORT	UEPXV	NA	NA	NA	NA	NA	NA	NA	NA	$2.92
NRC - OSS										
NRC - OSS LSR Charge, Electronic, per LSR received from the CLEC by one of the OSS interactive interfaces	SOMEC	$3.50	$2.75	$3.50	$3.50	$3.50	$3.50	$3.50	$3.50	$3.50
NRC - Incremental Charge - Manual Service Order - 1st	SOMAN	$27.37	$21.56	$18.94	NA	$18.14	$25.52	$26.94	$41.86	$20.35
NRC - Incremental Charge - Manual Service Order - Add'l	SOMAN	$12.97	$21.56	$8.42	NA	$8.06	$11.34	$12.76	$14.46	$10.54
NRC - Incremental Charge - Manual Service Order - Disconnect - 1st	SOMAN	$17.77	$3.84	NA	NA	$8.94	$16.06	NA	NA	$13.32
NRC - Incremental Charge - Manual Service Order - Disconnect - Add'l	SOMAN	$0.48	$3.84	NA	NA	NA	NA	NA	NA	$1.40
2-Wire Analog Hunting, per line per month	HTGUX	See features	NA	NA	$0.29	NA	See features	NA	See features	NA
NRC - 1st	HTGUX	See features	NA	NA	$2.14	NA	See features	NA	See features	NA
NRC - Add'l	HTGUX	See features	NA	NA	$2.14	NA	See features	NA	See features	NA
Coin Port, per month		$2.34	$1.62	$2.05	$3.04	$2.50	$2.32	NA	$2.77	$2.16
NRC - 1st		$21.93	$4.76	$17.16	$40.71	$16.43	$22.98	NA	$24.75	$9.93
NRC - Add'l		$21.93	$4.54	$17.16	$40.71	$16.43	$22.98	NA	$24.75	$9.19
NRC - Disconnect Charge - 1st		$5.21	$2.76	NA	NA	$4.15	$6.56	NA	NA	$3.66
NRC - Disconnect Charge - Add'l		$5.21	$2.59	NA	NA	$4.15	$6.56	NA	NA	$2.92
NRC - Incremental Charge - Manual Service Order - 1st	SOMAN	$25.93	$21.56	$18.94	NA	$18.14	$25.52	NA	$43.48	$20.35
NRC - Incremental Charge - Manual Service Order - Add'l	SOMAN	$12.97	$21.56	$8.42	NA	$8.06	$11.34	NA	$14.57	$10.54

BELLSOUTH/API RATES
NETWORK ELEMENTS
AND OTHER SERVICES

DESCRIPTION	USOC	AL	FL	GA	KY	LA	MS	NC	SC	TN
NRC - Incremental Charge - Manual Service Order - Disconnect - 1st	SOMAN	$16.33	$3.84	NA	NA	$9.86	$16.06	NA	NA	$13.32
NRC - Incremental Charge - Manual Service Order - Disconnect - Add'l	SOMAN	$0.48	$3.84	NA	NA	NA	NA	NA	NA	$1.40
VERTICAL FEATURES										
Local Switching Features offered with Port, Per month	N/A	NA	No add'l charge	NA	No add'l charge	$8.28	NA	NA	See above	NA
Three-Way Calling, per month		$1.12	NA	NA	NA	NA	$1.32	$0.89	$1.10	NA
NRC		$1.03	NA	NA	NA	NA	$1.02	$1.51	$1.51	NA
NRC - Disconnect		$0.55	NA	NA	NA	NA	$0.5466	NA	NA	NA
Customer Changeable Speed Calling, per month		$0.08	NA	NA	NA	NA	$0.0755	$0.17	$0.1247	NA
NRC		$1.03	NA	NA	NA	NA	$1.02	$1.51	$1.51	NA
NRC - Disconnect		$0.55	NA	NA	NA	NA	$0.5466	NA	NA	NA
Call Waiting		$0.03	NA	NA	NA	NA	$0.033	$0.09	$0.0665	NA
NRC		$1.03	NA	NA	NA	NA	$1.02	$1.51	$1.51	NA
NRC - Disconnect		$0.55	NA	NA	NA	NA	$0.5466	NA	NA	NA
Remote Activation of Call Fordwarding, per month		$0.18	NA	NA	NA	NA	$0.4859	$0.85	$0.3743	NA
NRC		$1.03	NA	NA	NA	NA	$1.02	$1.51	$1.51	NA
NRC - Disconnect		$0.55	NA	NA	NA	NA	$0.5466	NA	NA	NA
Cancel Call Waiting, per month		$0.01	NA	NA	NA	NA	$0.0082	$0.01	$0.0099	NA
NRC		$1.03	NA	NA	NA	NA	$1.02	$1.51	$1.51	NA
NRC - Disconnect		$0.55	NA	NA	NA	NA	$0.5466	NA	NA	NA
Automatic Callback, per month		$0.29	NA	NA	NA	NA	$0.9977	$0.66	$0.8015	NA
NRC		$1.03	NA	NA	NA	NA	$1.02	$1.51	$1.51	NA
NRC - Disconnect		$0.55	NA	NA	NA	NA	$0.5466	NA	NA	NA
Automatic Recall, per month		$0.28	NA	NA	NA	NA	$0.3164	$0.29	$0.3102	NA
NRC		$1.03	NA	NA	NA	NA	$1.02	$1.51	$1.51	NA
NRC - Disconnect		$0.55	NA	NA	NA	NA	$0.5466	NA	NA	NA
Calling Number Delivery, per month		$0.22	NA	NA	NA	NA	$0.1817	$0.33	$0.3272	NA
NRC		$1.03	NA	NA	NA	NA	$1.02	$1.51	$1.51	NA
NRC - Disconnect		$0.55	NA	NA	NA	NA	$0.5466	NA	NA	NA
Calling Number Delivery Blocking, per month		$1.17	NA	NA	NA	NA	$0.9913	$0.02	$0.3684	NA
NRC		$1.03	NA	NA	NA	NA	$1.02	$1.51	$1.51	NA
NRC - Disconnect		$0.55	NA	NA	NA	NA	$0.5466	NA	NA	NA
Customer Originated Trace, per month		$0.14	NA	NA	NA	NA	$0.1918	$0.14	$0.1402	NA
NRC		$1.03	NA	NA	NA	NA	$1.02	$1.51	$1.51	NA
NRC - Disconnect		$0.55	NA	NA	NA	NA	$0.5466	NA	NA	NA
Selective Call Rejection, per month		$0.13	NA	NA	NA	NA	$0.1721	$0.13	$0.1528	NA
NRC		$1.03	NA	NA	NA	NA	$1.02	$1.51	$1.51	NA
NRC - Disconnect		$0.55	NA	NA	NA	NA	$0.5466	NA	NA	NA
Selective Call Forwarding, per month		$0.05	NA	NA	NA	NA	$0.1050	$0.28	$0.1287	NA
NRC		$1.03	NA	NA	NA	NA	$1.02	$1.51	$1.51	NA
NRC - Disconnect		$0.55	NA	NA	NA	NA	$0.5466	NA	NA	NA
Selective Call Acceptance, per month		$0.29	NA	NA	NA	NA	$0.4010	$0.33	$0.3283	NA
NRC		$1.03	NA	NA	NA	NA	$1.02	$1.51	$1.51	NA
NRC - Disconnect		$0.55	NA	NA	NA	NA	$0.5466	NA	NA	NA
Multiline Hunt Service (Rotary)										
Service per line, (in addition to port) , per month		$0.11	NA	NA	NA	NA	$0.1271	$0.14	$0.1301	NA
NRC		$1.03	NA	NA	NA	NA	$1.02	$1.51	$1.51	NA
NRC - Disconnect		$0.55	NA	NA	NA	NA	$0.5466	NA	NA	NA
Call Forwarding Variable, per month		$0.05	NA	NA	NA	NA	$0.0474	$0.10	$0.0768	NA
NRC		$1.03	NA	NA	NA	NA	$1.02	$1.51	$1.51	NA
NRC - Disconnect		$0.55	NA	NA	NA	NA	$0.5466	NA	NA	NA
Call Forwarding Busy Line, per month		$0.03	NA	NA	NA	NA	$0.0279	$0.08	$0.0603	NA
NRC		$1.03	NA	NA	NA	NA	$1.02	$1.51	$1.51	NA

BELLSOUTH/API RATES
NETWORK ELEMENTS
AND OTHER SERVICES

DESCRIPTION	USOC	AL	FL	GA	KY	LA	MS	NC	SC	TN
NRC - Disconnect		$0.55	NA	NA	NA	NA	$0.5466	NA	NA	NA
Call Forwarding Don't Answer All Calls, per month		$0.03	NA	NA	NA	NA	$0.0308	$0.09	$0.0655	NA
NRC		$1.03	NA	NA	NA	NA	$1.02	$1.51	$1.51	NA
NRC - Disconnect		$0.55	NA	NA	NA	NA	$0.5466	NA	NA	NA
Remote Call Forwarding, per month		$1.36	NA	NA	NA	NA	$1.47	$0.95	$1.41	NA
NRC		$1.03	NA	NA	NA	NA	$1.02	$1.51	$1.51	NA
NRC - Disconnect		$0.55	NA	NA	NA	NA	$0.5466	NA	NA	NA
Call Transfer, per month		$0.12	NA	NA	NA	NA	$0.1404	$0.14	$0.1392	NA
NRC		$1.03	NA	NA	NA	NA	$1.02	$1.51	$1.51	NA
NRC - Disconnect		$0.55	NA	NA	NA	NA	$0.5466	NA	NA	NA
Call Hold, per month		$0.03	NA	NA	NA	NA	$0.0190	$0.15	$0.0677	NA
NRC		$1.03	NA	NA	NA	NA	$1.02	$1.51	$1.51	NA
NRC – Disconnect		$0.55	NA	NA	NA	NA	$0.5466	NA	NA	NA
Toll Restricted Service, per month		$0.04	NA	NA	NA	NA	$0.0387	$0.10	$0.0743	NA
NRC		$1.03	NA	NA	NA	NA	$1.02	$1.51	$1.51	NA
NRC - Disconnect		$0.55	NA	NA	NA	NA	$0.5466	NA	NA	NA
Message Waiting Indicator – Stutter Dial Tone, per month		$0.03	NA	NA	NA	NA	$0.0356	$0.03	$0.0318	NA
NRC		$1.03	NA	NA	NA	NA	$1.02	$1.51	$1.51	NA
NRC - Disconnect		$0.55	NA	NA	NA	NA	$0.5466	NA	NA	NA
Anonymous Call Rejection, per month		$0.93	NA	NA	NA	NA	$0.9519	$1.29	$1.13	NA
NRC		$1.03	NA	NA	NA	NA	$1.02	$1.51	$1.51	NA
NRC - Disconnect		$0.55	NA	NA	NA	NA	$0.5466	NA	NA	NA
Shared Call Appearances of a DN, per month		$0.41	NA	NA	NA	NA	$0.5015	$0.29	$0.3513	NA
NRC		$1.03	NA	NA	NA	NA	$1.02	$1.47	$1.47	NA
NRC - Disconnect		$0.55	NA	NA	NA	NA	$0.5466	NA	NA	NA
Multiple Call Appearances, per month		$0.09	NA	NA	NA	NA	$0.0932	$0.07	$0.0891	NA
NRC		$1.03	NA	NA	NA	NA	$1.02	$1.47	$1.47	NA
NRC - Disconnect		$0.55	NA	NA	NA	NA	$0.5466	NA	NA	NA
ISDN Bridged Call Exclusion, per month		$0.00	NA	NA	NA	NA	$0.0013	$0.0011	$0.0013	NA
NRC		$1.03	NA	NA	NA	NA	$1.02	$1.47	$1.47	NA
NRC - Disconnect		$0.55	NA	NA	NA	NA	$0.5466	NA	NA	NA
Call by Call Access, per month		$28.29	NA	NA	NA	NA	$50.89	$19.83	$0.3621	NA
NRC		$28.94	NA	NA	NA	NA	$28.61	$33.33	$33.36	NA
NRC - Disconnect		$5.22	NA	NA	NA	NA	$5.16	NA	NA	NA
Privacy Release, per month		$0.01	NA	NA	NA	NA	$0.0030	$0.0041	$0.0116	NA
NRC		$1.03	NA	NA	NA	NA	$1.02	$1.51	$1.51	NA
NRC - Disconnect		$0.55	NA	NA	NA	NA	$0.5466	NA	NA	NA
Multi Appearance Directory Number Calls, per month		$0.10	NA	NA	NA	NA	$0.1115	$0.13	$0.1048	NA
NRC		$1.03	NA	NA	NA	NA	$1.02	$1.51	$1.51	NA
NRC - Disconnect		$0.55	NA	NA	NA	NA	$0.5466	NA	NA	NA
Make Set Busy, per month		$0.01	NA	NA	NA	NA	$0.0013	$0.0020	$0.0101	NA
NRC		$1.03	NA	NA	NA	NA	$1.02	$1.51	$1.51	NA
NRC - Disconnect		$0.55	NA	NA	NA	NA	$0.5466	NA	NA	NA
Teen Service (Res. Dist. Alerting Service), per month		$0.15	NA	NA	NA	NA	$0.1071	$0.26	$0.2149	NA
NRC		$1.03	NA	NA	NA	NA	$1.02	$1.51	$1.51	NA
NRC - Disconnect		$0.55	NA	NA	NA	NA	$0.5466	NA	NA	NA
Code Restriction and Diversion, per month		$0.04	NA	NA	NA	NA	$0.0464	$0.09	$0.0708	NA
NRC		$1.03	NA	NA	NA	NA	$1.02	$1.51	$1.51	NA
NRC - Disconnect		$0.55	NA	NA	NA	NA	$0.5466	NA	NA	NA
Call Park, per month		$0.04	NA	NA	NA	NA	$0.0443	$0.09	$0.0694	NA
NRC		$1.03	NA	NA	NA	NA	$1.02	$1.51	$1.51	NA
NRC - Disconnect		$0.55	NA	NA	NA	NA	$0.5466	NA	NA	NA
Automatic Line, per month		$0.09	NA	NA	NA	NA	$0.1111	$0.14	$0.1179	NA
NRC		$1.03	NA	NA	NA	NA	$1.02	$1.51	$1.51	NA

BELLSOUTH/API RATES
NETWORK ELEMENTS
AND OTHER SERVICES

DESCRIPTION	USOC	AL	FL	GA	KY	LA	MS	NC	SC	TN
NRC - Disconnect		$0.55	NA	NA	NA	NA	$0.5466	NA	NA	NA
2-WIRE ISDN BRI FEATURES										
Shared Primary Number-First Appr On Each Add'l Terminal	DS1FJ	TBD	TBD	TBD	TBD	TBD	TBD	TBD	TBD	TBD
Secondary Only Dn (Shared/Non-Shared) First Appearance	LLDSF	TBD	TBD	TBD	TBD	TBD	TBD	TBD	TBD	TBD
Shared Secondary Only Dn-First Appr On Each Add'l Term	DS1F1	TBD	TBD	TBD	TBD	TBD	TBD	TBD	TBD	TBD
Shared Non-ISDN DN	DOE	TBD	TBD	TBD	TBD	TBD	TBD	TBD	TBD	TBD
Privacy Release	DS1FU	TBD	TBD	TBD	TBD	TBD	TBD	TBD	TBD	TBD
Manual Exclusion	DS1FM	TBD	TBD	TBD	TBD	TBD	TBD	TBD	TBD	TBD
Call Forwarding Variable-Voice Or Voice/Data	LLNCV	TBD	TBD	TBD	TBD	TBD	TBD	TBD	TBD	TBD
Call Forwarding Variable – Data	LLOCD	TBD	TBD	TBD	TBD	TBD	TBD	TBD	TBD	TBD
Call Forwarding Variable – Feature Button – Voice	GJXCF	TBD	TBD	TBD	TBD	TBD	TBD	TBD	TBD	TBD
Call Forwarding Variable – Feature Button – Data	LLPCD	TBD	TBD	TBD	TBD	TBD	TBD	TBD	TBD	TBD
Call Forwarding Busy Line – Voice Or Voice/Data	LLQCV	TBD	TBD	TBD	TBD	TBD	TBD	TBD	TBD	TBD
Call Forwarding Busy Line – Data	LLRCD	TBD	TBD	TBD	TBD	TBD	TBD	TBD	TBD	TBD
Call Frwdng Busy Line–Prgrmmbl–Voice Or Voice/Data	M6AVA	TBD	TBD	TBD	TBD	TBD	TBD	TBD	TBD	TBD
Call Forwarding Busy Line – Programmable - Data	M6ADF	TBD	TBD	TBD	TBD	TBD	TBD	TBD	TBD	TBD
Call Forwarding Don't Answer – Voice Or Voice/Data	LLSCV	TBD	TBD	TBD	TBD	TBD	TBD	TBD	TBD	TBD
Call Forwarding Don't Answer – Data	LLUCD	TBD	TBD	TBD	TBD	TBD	TBD	TBD	TBD	TBD
Call Forwdng Don't Answer–Prgrmmble Voice Or Voice/Data	M6BVA	TBD	TBD	TBD	TBD	TBD	TBD	TBD	TBD	TBD
Call Forwarding Don't Answer – Programmable - Data	M6BDF	TBD	TBD	TBD	TBD	TBD	TBD	TBD	TBD	TBD
Call Frwdng Multiple Simultaneous – Voice Or Voice/Data	M6CV5	TBD	TBD	TBD	TBD	TBD	TBD	TBD	TBD	TBD
Call Forwarding Multiple Simultaneous – Data	M6CD5	TBD	TBD	TBD	TBD	TBD	TBD	TBD	TBD	TBD
Conference, Drop, Hold And Transfer	DS1FN	TBD	TBD	TBD	TBD	TBD	TBD	TBD	TBD	TBD
Six-Way Conference, Drop, Hold And Transfer	LLY6P	TBD	TBD	TBD	TBD	TBD	TBD	TBD	TBD	TBD
Multi-Line Hunt Group – Voice Or Voice/Data	HTG	TBD	TBD	TBD	TBD	TBD	TBD	TBD	TBD	TBD
Multi-Line Hunt Group – Data	HTGSD	TBD	TBD	TBD	TBD	TBD	TBD	TBD	TBD	TBD
Speed Calling	LLZSU	TBD	TBD	TBD	TBD	TBD	TBD	TBD	TBD	TBD
Visual Message Waiting Indicator	LLAVP	TBD	TBD	TBD	TBD	TBD	TBD	TBD	TBD	TBD
Audible Message Waiting Indicator	MWW	TBD	TBD	TBD	TBD	TBD	TBD	TBD	TBD	TBD
Additional Call Appearance, PDN Or DN	DS1FG	TBD	TBD	TBD	TBD	TBD	TBD	TBD	TBD	TBD
Call Tracing	NST	TBD	TBD	TBD	TBD	TBD	TBD	TBD	TBD	TBD
Call Return	NSS	TBD	TBD	TBD	TBD	TBD	TBD	TBD	TBD	TBD
Preferred Call Forwarding	NCE	TBD	TBD	TBD	TBD	TBD	TBD	TBD	TBD	TBD
Call Block	NSY	TBD	TBD	TBD	TBD	TBD	TBD	TBD	TBD	TBD
Repeat Dialing	NSQ	TBD	TBD	TBD	TBD	TBD	TBD	TBD	TBD	TBD
Per Line Blocking For Agencies/Law Enforcement	NOB	TBD	TBD	TBD	TBD	TBD	TBD	TBD	TBD	TBD
Per Line Blocking For Non-Pub Customers	NOBNN	TBD	TBD	TBD	TBD	TBD	TBD	TBD	TBD	TBD
Per Line Blocking For General Public	NOBPC	TBD	TBD	TBD	TBD	TBD	TBD	TBD	TBD	TBD
Per Line Blocking For Non-Pub, And Non-Listed Customer	NOBPP	TBD	TBD	TBD	TBD	TBD	TBD	TBD	TBD	TBD
Per Line Blocking For Non-Pub Customers	NOBNP	TBD	TBD	TBD	TBD	TBD	TBD	TBD	TBD	TBD
Per Line Blocking For Non-Pub Customers	NOBNR	TBD	TBD	TBD	TBD	TBD	TBD	TBD	TBD	TBD
Call Return Denial Of, Per Activation	BCR	TBD	TBD	TBD	TBD	TBD	TBD	TBD	TBD	TBD
Repeat Dialing, Denial Of, Per Activation	BRD	TBD	TBD	TBD	TBD	TBD	TBD	TBD	TBD	TBD
Automatic Line/Direct Connect	M6GN9	TBD	TBD	TBD	TBD	TBD	TBD	TBD	TBD	TBD
Make Set Busy	M6MPD	TBD	TBD	TBD	TBD	TBD	TBD	TBD	TBD	TBD
Selective Call Acceptance	M6K16	TBD	TBD	TBD	TBD	TBD	TBD	TBD	TBD	TBD
Call Park/Call Retrieve	M6HP6	TBD	TBD	TBD	TBD	TBD	TBD	TBD	TBD	TBD
Call Transfer System Exception	M6QTD	TBD	TBD	TBD	TBD	TBD	TBD	TBD	TBD	TBD
Make Set Busy – Intragroup	M6MGD	TBD	TBD	TBD	TBD	TBD	TBD	TBD	TBD	TBD
All Customized Code Restrictions	CREX+	TBD	TBD	TBD	TBD	TBD	TBD	TBD	TBD	TBD
Additional Listings	CLT	TBD	TBD	TBD	TBD	TBD	TBD	TBD	TBD	TBD
Additional Listing No Rate	FLT	TBD	TBD	TBD	TBD	TBD	TBD	TBD	TBD	TBD
Cross Reference Listing	LLT	TBD	TBD	TBD	TBD	TBD	TBD	TBD	TBD	TBD
Non-Pub Listing No Rate	NP3	TBD	TBD	TBD	TBD	TBD	TBD	TBD	TBD	TBD
Non-List Listing	NLT	TBD	TBD	TBD	TBD	TBD	TBD	TBD	TBD	TBD

BELLSOUTH/API RATES
NETWORK ELEMENTS
AND OTHER SERVICES

DESCRIPTION	USOC	AL	FL	GA	KY	LA	MS	NC	SC	TN
Non-List Listing No Rate	NLE	TBD	TBD	TBD	TBD	TBD	TBD	TBD	TBD	TBD
Alternate Call Listing	FNA	TBD	TBD	TBD	TBD	TBD	TBD	TBD	TBD	TBD
Manual Service Order Charge	SOMAN	TBD	TBD	TBD	TBD	TBD	TBD	TBD	TBD	TBD
All Selective Class Of Call Screening	SRG++	TBD	TBD	TBD	TBD	TBD	TBD	TBD	TBD	TBD
ISDN Message Waiting Indication-Lamp, per month		$0.01	NA	NA	NA	NA	$0.0105	$0.0107	$0.0138	NA
NRC		$1.03	NA	NA	NA	NA	$1.02	$1.47	$1.47	NA
NRC - Disconnect		$0.55	NA	NA	NA	NA	$0.5466	NA	NA	NA
ISDN Feature Function Buttons		NA	NA	NA	NA	NA	NA	NA		
NRC		$1.03	NA	NA	NA	NA	$1.02	$1.51	$1.51	NA
NRC - Disconnect		$0.55	NA	NA	NA	NA	$0.5466	NA	NA	NA
Subsequent Ordering Charge – (per order, per line)		NA	NA	NA	NA	NA	NA	NA		
NRC - Electronic - 1st		$2.88	NA	NA	NA	NA	$2.84	$5.42	$1.36	NA
NRC - Electronic - Add'l		$0.96	NA	NA	NA	NA	$0.95	$0.95	$0.71	NA
NRC - Manual - 1st		$4.80	NA	NA	NA	NA	$4.73	$1.89	$7.35	NA
NRC - Manual - Add'l		$0.96	NA	NA	NA	NA	$0.95	NA	$0.95	NA
NRC - Disconnect		$2.88	NA	NA	NA	NA	$2.84	NA	NA	NA
Unbundled Port Usage Charges										
End Office Switching (Port Usage)										
End Office Switching Function, per mou	N/A	$0.0018	$0.0008846	$0.0016333	$0.002562	$0.0021	$0.0023771	$0.0017000	$0.0019295	$0.0008
End Office Interoffice Trunk Port—Shared, per mou	N/A	$0.0002	$0.0001893	$0.0001564	NA	$0.0002	$0.0001927	NA	$0.0002581	NA
Tandem Switching (Port Usage) (Local or Access Tandem)										
Tandem Switching Function per mou	N/A	$0.00063	$0.0001522	$0.0006757	$0.001096	$0.0008	$0.0007834	$0.0009	$0.0006843	$0.000978
Tandem Interoffice Trunk Port - Shared per mou			$0.0002713	$0.0002126	NA	$0.0003	$0.0002834	NA	$0.0004034	NA
Common (Shared) Transport										
Common (Shared) Transport per mile per mou	N/A	$0.00001	$0.0000039	$0.000008	$0.0000049	$0.0000083	$0.0000091	$0.00001	$0.0000121	$0.0000064
Common (Shared) Transport Facilities Termination per mou	N/A	$0.00045	$0.0004579	$0.0004152	$0.000426	$0.00047	$0.0004281	$0.00034	$0.0004672	$0.0003871
NOTES:										
Interim rates subject to true-up.										
1 Port rate includes all available features.										
2 Transmission/usage charges associated with POTS circuit switched usage will also apply to circuit switched voice and/or circuit switched data transmission by B-Channels associated with 2-wire ISDN ports.										
3 Access to B Channel or D Channel Packet capabilities will be avail- able only through BFR/New Business Request Process. Rates for the packet capabilities will be determined via the Bona Fide Request/New Business Request Process.										
4 This rate element is for those states which have a specific rate for User Profile per B Channel.										
5 This rate element is for use in those states with a different rate for additional minutes of use.										
6 Rates in TN and FL are interim and shall be trued-up when final rates are ordered.										

BELLSOUTH/API RATES
NETWORK ELEMENTS
AND OTHER SERVICES

DESCRIPTION	USOC	AL	FL	GA	KY	LA	MS	NC	SC	TN
UNBUNDLED DEDICATED TRANSPORT - Local Channel										
Local Channel - Dedicated - 2-Wire VG										
2-wire VG per mile	1L5NC	$0.00	$0.00	$0.00	$0.00	$0.00	$0.00	$0.00	$0.00	$0.00
2-wire VG Monthly Recurring per month	ULDV2	$14.61	$29.33	$13.91	$22.26	$14.94	$17.83	$14.83	$16.83	$19.02
NRC - 2-wire VG - 1st	ULDV2	$494.65	$386.34	$382.95	$585.15	$347.49	$487.62	$553.80	$554.00	$199.33
NRC - 2-wire VG -Add'l	ULDV2	$84.44	$66.36	$62.40	$98.53	$59.75	$84.35	$89.69	$88.58	$24.16
NRC - 2-Wire VG - Disconnect Chg - 1st	ULDV2	$77.81	$67.91	NA	NA	$53.68	$77.69	NA	NA	$54.81
NRC - 2-Wire VG - Disconnect Chg - Add'l	ULDV2	$7.63	$5.92	NA	NA	$6.60	$8.95	NA	NA	$4.80
NRC - Manual Svc Order, per LSR	SOMAN	NA	$21.56	NA	$19.99	NA	NA	NA	NA	$19.99
NRC - Manual Svc Order, per LSR disconnect	SOMAN	NA	$3.84	NA	NA	NA	NA	NA	NA	NA
NRC - Electronic Svc Order, per LSR	SOMEC	$3.50	$2.75	$3.50	$3.50	$3.50	$3.50	$3.50	$3.50	$3.50
NRC - Electronic Svc Order, per LSR disconnect	SOMEC	NA	$0.42	NA	NA	NA	NA	NA	NA	NA
NRC - 2-Wire VG - Incremental Charge--Manual Svc Order - 1st	SOMAN	$27.37	NA	$18.94	$41.46	$18.14	$25.50	$42.17	$43.75	NA
NRC - 2-Wire VG - Incremental Charge--Manual Svc Order - Add'l	SOMAN	$18.37	NA	$8.42	$11.99	$8.06	$11.34	$12.76	$13.55	NA
NRC - 2-Wire VG - Incremental Charge--Manual Svc Order-Disconnect	SOMAN	$17.75	NA	NA	NA	$11.40	$16.05	NA	NA	NA
Local Channel - Dedicated - 2-Wire VG Rev. Bat.										
2-wire VG per mile	1L5NC	$0.00	$0.00	$0.00	$0.00	$0.00	$0.00	$0.00	$0.00	$0.00
2-wrire VG Monthly Recurring per month	ULDR2	$14.61	$29.33	$13.91	$22.26	$14.94	$17.83	$14.83	$16.83	$19.02
NRC - 2-wire VG - 1st	ULDR2	$494.65	$3,865.34	$382.95	$585.15	$347.49	$487.62	$553.80	$554.00	$199.33
NRC - 2-wire VG -Add'l	ULDR2	$84.44	$66.36	$62.40	$98.53	$59.75	$84.35	$89.69	$88.58	$24.16
NRC - 2-Wire VG - Disconnect Chg - 1st	ULDR2	$77.81	$67.91	NA	NA	$53.68	$77.69	NA	NA	$54.81
NRC - 2-Wire VG - Disconnect Chg - Add'l	ULDR2	$7.63	$5.92	NA	NA	$6.60	$8.95	NA	NA	$4.80
NRC - Manual Svc Order, per LSR	SOMAN	NA	$21.56	NA	$19.99	NA	NA	NA	NA	$19.99
NRC - Manual Svc Order, per LSR disconnect	SOMAN	NA	$3.84	NA	NA	NA	NA	NA	NA	NA
NRC - Electronic Svc Order, per LSR	SOMEC	$3.50	$2.75	$3.50	$3.50	$3.50	$3.50	$3.50	$3.50	$3.50
NRC - Electronic Svc Order, per LSR disconnect	SOMEC	NA	$0.42	NA	NA	NA	NA	NA	NA	NA
NRC - 2-Wire VG - Incremental Charge--Manual Svc Order - 1st	SOMAN	$27.37	NA	$18.94	$41.46	$18.14	$25.50	$42.17	$43.75	NA
NRC - 2-Wire VG - Incremental Charge--Manual Svc Order - Add'l	SOMAN	$18.37	NA	$8.42	$11.99	$8.06	$11.34	$12.76	$13.55	NA
NRC - 2-Wire VG - Incremental Charge--Manual Svc Order-Disconnect	SOMAN	$17.75	NA	NA	NA	$11.40	$16.05	NA	NA	NA
Local Channel - Dedicated - 4-Wire VG										
4-wire VG per mile	1L5NC	$0.00	$0.00	$0.00	$0.00	$0.00	$0.00	$0.00	$0.00	$0.00
4-wire VG Monthly Recurring per month	ULDV4	$15.77	$30.50	$14.99	$23.38	$16.21	$19.03	$15.87	$18.05	$20.14
NRC - 4-Wire VG - 1st	ULDV4	$502.43	$387.21	$368.44	$585.15	$352.75	$495.25	$562.23	$562.46	$201.53
NRC - 4-Wire VG - Add'l	ULDV4	$86.68	$67.22	NA	$98.53	$61.33	$86.56	$92.67	$91.57	$24.83
NRC - 4-Wire VG - Disconnect Chg - 1st	ULDV4	$78.71	$68.78	NA	NA	$54.36	$78.58	NA	NA	$55.52
NRC - 4-Wire VG - Disconnect Chg - Add'l	ULDV4	$8.53	$6.79	NA	NA	$7.28	$9.84	NA	NA	$5.51
NRC - Manual Svc Order, per LSR	SOMAN	NA	$21.56	NA	$19.99	NA	NA	NA	NA	$19.99
NRC - Manual Svc Order, per LSR disconnect	SOMAN	NA	$3.84	NA	NA	NA	NA	NA	NA	NA
NRC - Electronic Svc Order, per LSR	SOMEC	NA	$2.75	$3.50	$3.50	$3.50	$3.50	$3.50	$3.50	$3.50
NRC - Electronic Svc Order, per LSR disconnect	SOMEC	$3.50	$0.42	NA	NA	NA	NA	NA	NA	NA
NRC - 4-Wire VG - Incremental Charge--Manual Svc Order - 1st	SOMAN	$27.37	NA	$18.94	$41.46	$18.14	$25.52	$42.17	$43.64	NA
NRC - 4-Wire VG - Incremental Charge--Manual Svc Order - Add'l	SOMAN	$18.73	NA	$8.42	$11.99	$8.06	$11.34	$12.76	$13.55	NA
NRC - 4-Wire VG - Incremental Charge--Manual Svc Order-Disconnect	SOMAN	$17.75	NA	NA	NA	$11.40	$17.25	NA	NA	NA
Local Channel - Dedicated - DS1										
DS1 per mile	1L5NC	$0.00	$0.00	$0.00	$0.00	$0.00	$0.00	$0.00	$0.00	$0.00
DS1 per month	ULDF1	$35.52	$43.53	$38.36	$43.80	$43.80	$38.91	$35.68	$37.20	$40.27
NRC - DS1 - 1st	ULDF1	$503.57	$242.45	$356.15	$538.95	$348.56	$494.83	$534.48	$534.81	$277.35
NRC - DS1 - Add'l	ULDF1	$442.84	$226.44	$312.89	$464.94	$300.30	$435.28	$462.69	$462.81	$233.26
NRC - DS1 - Disconnect Chg - 1st	ULDF1	$46.28	$41.13	$122.31	NA	$24.15	$46.85	NA	NA	$33.18
NRC - DS1 - Disconnect Chg - Add'l	ULDF1	$32.18	$28.28	$119.14	NA	$21.31	$33.02	NA	NA	$22.30
NRC - Manual Svc Order, per LSR	SOMAN	NA	$21.56	NA	$19.99	NA	NA	NA	NA	$19.99
NRC - Manual Svc Order, per LSR disconnect	SOMAN	NA	$3.84	NA	NA	NA	NA	NA	NA	NA
NRC - Electronic Svc Order, per LSR	SOMEC	$3.50	$2.75	$3.50	$3.50	$3.50	$3.50	$3.50	$3.50	$3.50

BELLSOUTH/API RATES
NETWORK ELEMENTS
AND OTHER SERVICES

DESCRIPTION	USOC	AL	FL	GA	KY	LA	MS	NC	SC	TN
NRC - Electronic Svc Order, per LSR disconnect	SOMEC	NA	$0.42	NA	NA	NA	NA	NA	NA	NA
NRC - DS1 - Incremental Charge--Manual Svc Order - 1st	SOMAN	$61.95	NA	$44.22	$87.71	$42.34	$59.58	$86.15	$87.99	NA
NRC - DS1 - Incremental Charge--Manual Svc Order - Add'l	SOMAN	$0.00	NA	NA	NA	NA	NA	$1.77	$3.11	NA
NRC - DS1 - Incremental Charge--Manual Svc Order-Disconnect	SOMAN	$29.27	NA	$18.03	NA	$19.48	$27.40	NA	NA	NA
Local Channel - Dedicated - DS3										
DS3 - per mile per month	1L5NC	$8.44	$9.16	$6.92	$34.00	$30.34	NA	NA	$12.08	$23.76
DS3 - Facility Termination per month	ULDF3	$535.92	$556.27	$515.91	$635.09	$669.01	$533.33	$498.87	$493.31	$607.28
NRC - DS3 - Facility Termination - 1st	ULDF3	$640.54	$903.37	$639.50	$1,091	$709.14	$526.67	$562.25	$735.42	$726.16
NRC - DS3 - Facility Termination - Add'l	ULDF3	$426.28	$528.05	$426.31	$661.23	$402.63	$493.71	$527.88	$519.31	$411.64
NRC - DS3 - Facility Termination - Disconnect - 1st	ULDF3	$121.72	$221.46	$122.31	NA	$102.16	$42.41	NA	NA	$103.36
NRC - DS3 - Facility Termination - Disconnect - Add'l	ULDF3	$118.54	$154.90	$119.14	NA	$99.46	$40.87	NA	NA	$100.59
NRC - Manual Svc Order, per LSR	SOMAN	NA	$21.56	NA	$19.99	NA	NA	NA	NA	$19.99
NRC - Manual Svc Order, per LSR disconnect	SOMAN	NA	$3.84	NA	NA	NA	NA	NA	NA	NA
NRC - Electronic Svc Order, per LSR	SOMEC	$3.50	$2.75	$3.50	$3.50	$3.50	$3.50	$3.50	$3.50	$3.50
NRC - Electronic Svc Order, per LSR disconnect	SOMEC	NA	$0.42	NA	NA	NA	NA	NA	NA	NA
NRC - DS3 -Incremental Charge--Manual Svc Order - 1st	SOMAN	$38.48	NA	$37.55	$93.12	$50.25	$31.49	$56.25	$54.26	NA
NRC - DS3 - Incremental Charge--Manual Svc Order - Add'l	SOMAN	$38.48	NA	$37.55	$93.12	$50.25	$31.49	$56.25	$54.26	NA
NRC - DS3 - Incremental Charge--Manual Svc Order-Disconnect -1st	SOMAN	$19.03	NA	$18.03	NA	$20.94	$25.35	NA	NA	NA
NRC - DS3 - Incremental Charge--Manual Svc Order-Disconnect-Add'l	SOMAN	$19.03	NA	$18.03	NA	$20.94	$25.35	NA	NA	NA
Local Channel - Dedicated - STS-1										
STS-1 - per mile per month	1L5NC	$8.44	$9.16	$6.92	$34.00	$8.77	$38.98	NA	$12.08	$25.11
STS-1 - Facility Termination per month	ULDFS	$525.40	$565.48	$517.56	$635.09	$558.00	$531.39	$498.87	$481.14	$615.65
NRC - STS-1 - Facility Termination - 1st	ULDFS	$640.54	$903.37	$639.50	$1,091	$594.71	$1,084.33	$562.25	$735.42	$1,085.73
NRC - STS-1 - Facility Termination - Add'l	ULDFS	$426.82	$528.05	$426.40	$661.23	$396.54	$682.13	$527.88	$519.31	$683.01
NRC - STS-1 - Facility Termination - Disconnect - 1st	ULDFS	$121.72	$221.46	$122.31	NA	$113.75	$42.41	NA	NA	$103.36
NRC - STS-1 - Facility Termination - Disconnect - Add'l	ULDFS	$118.54	$154.90	$119.14	NA	$110.80	$40.87	NA	NA	$100.59
NRC - Manual Svc Order, per LSR	SOMAN	NA	$21.56	NA	$19.99	NA	NA	NA	NA	$19.99
NRC - Manual Svc Order, per LSR disconnect	SOMAN	NA	$3.84	NA	NA	NA	NA	NA	NA	NA
NRC - Electronic Svc Order, per LSR	SOMEC	$3.50	$2.75	$3.50	$3.50	$3.50	$3.50	$3.50	$3.50	$3.50
NRC - Electronic Svc Order, per LSR disconnect	SOMEC	NA	$0.42	NA	NA	NA	NA	NA	NA	NA
NRC - STS-1 -Incremental Charge--Manual Svc Order - 1st	SOMAN	$38.48	NA	$37.55	$93.12	$34.92	$96.10	$56.25	$54.26	NA
NRC - STS-1 - Incremental Charge--Manual Svc Order - Add'l	SOMAN	$38.48	NA	$37.55	$93.12	$34.92	$96.10	$56.25	$54.26	NA
NRC - STS-1 - Incremental Charge--Manual Svc Order-Disconnect -1st	SOMAN	$19.03	NA	$18.03	NA	$16.77	$25.35	NA	NA	NA
NRC - STS-1 - Incremental Charge--Manual Svc Order-Disconnect-Add'l	SOMAN	$19.03	NA	$18.03	NA	$16.77	$25.35	NA	NA	NA
Local Channel - Dedicated - OC3										
OC3 per mile per month	1L5NC	$7.09	$8.93	$5.82	$28.56	$25.48	$35.55	$21.27	$10.15	$19.95
OC3 Facility Termination per month		$1,123	$648.60	$914.22	$1,493	$1,179	$873.23	$914.18	$493.31	$1,263
NRC - OC3 - Facility Termination - 1st		$949.63	$966.45	$947.69	$1,543	$1,025	$1,427.00	$1,543	$735.42	$1,050
NRC - OC3 - Facility Termination - Add'l		$413.38	$408.85	$413.00	$661.23	$402.63	$549.17	$670.92	$519.31	$411.64
NRC - OC3 - Facility Termination - Disconnect Chg - 1st		$121.72	$11.56	$122.31	NA	$102.16	$134.07	NA	NA	$103.36
NRC - OC3 - Facility Termination - Disconnect Chg - Add'l		$118.54	$108.34	$119.14	NA	$99.46	$130.59	NA	NA	$100.59
NRC - Manual Svc Order, per LSR	SOMAN	NA	$21.56	NA	$19.99	NA	NA	NA	NA	$19.99
NRC - Manual Svc Order, per LSR disconnect	SOMAN	NA	$3.84	NA	NA	NA	NA	NA	NA	NA
NRC - Electronic Svc Order, per LSR	SOMEC	$3.50	$2.75	$3.50	$3.50	$3.50	$3.50	$3.50	$3.50	$3.50
NRC - Electronic Svc Order, per LSR disconnect	SOMEC	NA	$0.42	NA	NA	NA	NA	NA	NA	NA
NRC - OC3 - Incremental Charge--Manual Svc Order - 1st	SOMAN	$38.48	NA	$37.55	$93.12	$50.25	$68.62	$99.10	$54.26	NA
NRC - OC3 - Incremental Charge--Manual Svc Order - Add'l	SOMAN	$38.48	NA	$37.55	$93.12	$50.25	$68.62	$99.10	$54.26	NA
NRC - OC3 - Incremental Charge--Manual Svc Order-Disconnect-1st	SOMAN	$19.03	NA	$18.03	NA	$20.94	$28.59	NA	NA	NA
NRC - OC3 - Incremental Charge--Manual Svc Order-Disconnect-Add'l	SOMAN	$19.03	NA	$18.03	NA	$20.94	$28.59	NA	NA	NA
Local Channel - Dedicated - OC12										
OC12 per mile per month	1L5NC	$10.13	$2,053.06	$8.31	$40.80	$36.40	$50.79	$30.38	$14.50	$28.51
OC12 Facility Termination per month		$5,630	$1,183.46	$3,185.00	$4,492	$3,895	$3,414.00	$3,316	$4,414	$7,158

BELLSOUTH/API RATES
NETWORK ELEMENTS
AND OTHER SERVICES

DESCRIPTION	USOC	AL	FL	GA	KY	LA	MS	NC	SC	TN
NRC - OC12 - Facility Termination - 1st		$1,165	$408.85	$1,162.00	$1,858	$1,245	$1,742.00	$1,853	$1,259	$1,276
NRC - OC12 - Facility Termination - Add'l		$413.38	$111.56	$413.00	$661.23	$402.63	$549.17	$670.92	$505.88	$411.64
NRC - OC12 - Facility Termination -Disconnect Chg - 1st		$121.72	$108.34	$122.31	NA	$102.16	$134.07	NA	NA	$103.36
NRC - OC12 - Facility Termination - Disconnect Chg - Add'l		$118.54	$21.56	$119.14	NA	$99.46	$130.59	NA	NA	$100.59
NRC - Manual Svc Order, per LSR	SOMAN	NA	$3.84	NA	$19.99	NA	NA	NA	NA	$19.99
NRC - Manual Svc Order, per LSR disconnect	SOMAN	NA	$2.75	NA	NA	NA	NA	NA	NA	NA
NRC - Electronic Svc Order, per LSR	SOMEC	$3.50	$0.42	$3.50	$3.50	$3.50	$3.50	$3.50	$3.50	$3.50
NRC - Electronic Svc Order, per LSR disconnect	SOMEC	NA	$0.43	NA	NA	NA	NA	NA	NA	NA
NRC - OC12 - Incremental Charge--Manual Svc Order - 1st	SOMAN	$38.48	NA	$37.55	$93.12	$50.25	$68.62	$99.10	$54.26	NA
NRC - OC12 - Incremental Charge--Manual Svc Order - Add'l	SOMAN	$38.48	NA	$37.55	$93.12	$50.25	$68.62	$99.10	$54.26	NA
NRC - OC12 - Incremental Charge--Manual Svc Order-Disconnect-1st	SOMAN	$19.03	NA	$18.03	NA	$20.94	$28.59	NA	NA	NA
NRC - OC12 - Incremental Charge--Manual Svc Order-Disconnect-Add'l	SOMAN	$19.03	NA	$18.03	NA	$20.94	$28.59	NA	NA	NA
Local Channel - Dedicated - OC48										
OC48 per mile per month	1L5NC	$33.22	$36.04	$27.25	$133.84	$119.40	$166.59	$99.66	$47.57	$93.50
OC48 Facility Termination per month		$1,947	$1,685.97	$1,671	$2,156	$2,311	$1,768.00	$1,837	$1,842	$1,853
OC48 - Interface OC12 on OC48 per month		$699.62	$587.71	$558.07	$728.81	$706.85	$668.36	$584.78	$773.40	$572.61
NRC - OC48 - Facility Termination - 1st		$1,165	$1,183.46	$1,162.00	$1,858	$1,245	$1,742.00	$1,853	$1,259	$1,276
NRC - OC48 - Facility Termination -Add'l		$413.38	$408.85	$413.00	$661.23	$402.63	$549.17	$670.92	$505.88	$411.64
NRC - OC48 - Interface OC12 on OC48 - 1st		$540.10	$543.72	$539.36	$844.21	$532.13	$729.04	$852.47	$635.04	$544.55
NRC -OC48 - Interface OC12 on OC48 -Add'l		$317.48	$312.05	$317.38	$516.89	$304.90	$404.94	$528.57	$410.02	$311.39
NRC - OC48 - Facility Termination - Disconnect Chg - 1st		$121.72	$111.56	$122.31	NA	$102.16	$134.07	NA	NA	$103.36
NRC - OC48 - Facility Termination - Disconnect Chg - Add'l		$118.54	$108.34	$119.14	NA	$99.46	$130.59	NA	NA	$100.59
NRC - OC48 - Interface OC12 on OC48 - Disconnect Chg - 1st		$121.72	$111.56	$122.31	NA	$102.16	$134.07	NA	NA	$103.36
NRC - OC48 - Interface OC12 on OC48 - Disconnect Chg - Add'l		$118.54	$108.34	$119.14	NA	$99.46	$130.59	NA	NA	$100.59
NRC - Manual Svc Order, per LSR	SOMAN	NA	$21.56	NA	$19.99	NA	NA	NA	NA	$19.99
NRC - Manual Svc Order, per LSR disconnect	SOMAN	NA	$3.84	NA	NA	NA	NA	NA	NA	NA
NRC - Electronic Svc Order, per LSR	SOMEC	$3.50	$2.75	$3.50	$3.50	$3.50	$3.50	$3.50	$3.50	$3.50
NRC - Electronic Svc Order, per LSR disconnect	SOMEC	NA	$0.42	NA	NA	NA	NA	NA	NA	NA
NRC - OC48 - Incremental Charge--Manual Svc Order - 1st	SOMAN	$38.48	NA	$37.55	$93.12	$50.25	$68.62	$99.10	$54.26	NA
NRC - OC48 - Incremental Charge--Manual Svc Order - Add'l	SOMAN	$38.48	NA	$37.55	$93.12	$50.25	$68.62	$99.10	$54.26	NA
NRC - OC48 -Interface-Incremental Cost-Manual Svc. Order vs. Electronic-1	SOMAN	$38.48	NA	$37.55	$93.12	$50.25	$68.62	$99.10	$54.26	NA
NRC - OC48 -Interface-Incremental Cost-Manual Svc. Order vs. Electronic-A	SOMAN	$38.48	NA	$37.55	$93.12	$50.25	$68.62	$99.10	$54.26	NA
NRC - OC48 - Incremental Charge--Manual Svc Order-Disconnect-1st	SOMAN	$19.03	NA	$18.03	NA	$20.94	$28.59	NA	NA	NA
NRC - OC48 - Incremental Charge--Manual Svc Order-Disconnect-Add'l	SOMAN	$19.03	NA	$18.03	NA	$20.94	$28.59	NA	NA	NA
NRC - OC48 -Interface-Incremental Cost-Manual Svc. Order vs. Electronic-D	SOMAN	$19.03	NA	$18.03	NA	$20.94	$28.59	NA	NA	NA
NRC - OC48 -Interface-Incremental Cost-Manual Svc. Order vs. Electronic-D	SOMAN	$19.03	NA	$18.03	NA	$20.94	$28.59	NA	NA	NA
UNBUNDLED DEDICATED TRANSPORT - Interoffice Channel										
Interoffice Transport - Dedicated - 2-wire VG										
2-Wire VG - per mile per month	1L5XX	$0.0339	$0.0098	$0.0222	$0.0301	$0.0384	$0.0323	$0.0282	$0.0373	$0.0173
2-Wire VG - Facility Termination per month	U1TV2	$18.49	$26.52	$17.07	$27.66	$19.10	$21.33	$18.01	$21.42	$18.33
NRC - 2-wire VG - Facility Termination -1st	U1TV2	$107.11	$81.09	$79.61	$142.31	$76.20	$106.72	$137.48	$136.44	$55.39
NRC - 2-wire VG - Facility Termination - Add'l	U1TV2	$48.27	$54.83	$36.08	$56.21	$34.54	$48.83	$52.58	$51.37	$17.37
NRC - 2-wire VG -Facility Termination - Disconnect Charge -1st	U1TV2	$37.16	$31.01	NA	NA	$28.03	$38.05	NA	NA	$27.96
NRC - 2-wire VG - Facility Termination - Disconnect Charge -Add'l	U1TV2	$5.88	$12.78	NA	NA	$5.37	$7.23	NA	NA	$3.51
NRC - Manual Svc Order, per LSR	SOMAN	NA	$21.56	NA	$19.99	NA	NA	NA	NA	$19.99
NRC - Manual Svc Order, per LSR disconnect	SOMAN	NA	$3.84	NA	NA	NA	NA	NA	NA	NA
NRC - Electronic Svc Order, per LSR	SOMEC	$3.50	$2.75	$3.50	$3.50	$3.50	$3.50	$3.50	$3.50	$3.50
NRC - Electronic Svc Order, per LSR disconnect	SOMEC	NA	$0.42	NA	NA	NA	NA	NA	NA	NA
NRC - 2-wire VG - Incremental Charge--Manual Svc Order - 1st	SOMAN	$27.37	NA	$18.94	$37.21	$18.14	$25.52	$38.07	$39.63	NA
NRC - 2-wire VG - Incremental Charge--Manual Svc Order - Add'l	SOMAN	$27.57	NA	$18.94	$37.21	$18.14	$25.52	$38.07	$39.63	NA
NRC - 2-wire VG - Incremental Charge--Manual Svc Order-Disconnect--1st	SOMAN	$12.97	NA	NA	NA	$8.06	$11.34	NA	NA	NA
NRC - 2-wire VG - Incremental Charge--Manual Svc Order-Disconnect--Add'l	SOMAN	$12.97	NA	NA	NA	$8.06	$11.34	NA	NA	NA
Interoffice Transport - Dedicated - 2-wire VG - Rev Bat.										

BELLSOUTH/API RATES
NETWORK ELEMENTS
AND OTHER SERVICES

DESCRIPTION	USOC	AL	FL	GA	KY	LA	MS	NC	SC	TN
2-Wire VG - per mile per month	1L5XX	$0.0339	$0.0098	$0.0222	$0.0301	$0.0384	$0.0323	$0.0282	$0.0373	$0.0173
2-Wire VG - Facility Termination per month	U1TR2	$18.49	$26.52	$17.07	$27.66	$19.10	$21.33	$18.00	$21.42	$18.33
NRC - 2-wire VG - Facility Termination -1st	U1TR2	$107.11	$81.09	$79.61	$142.31	$76.20	$106.72	$137.48	$136.44	$55.39
NRC - 2-wire VG - Facility Termination - Add'l	U1TR2	$48.27	$54.83	$36.08	$56.21	$34.54	$48.83	$52.58	$51.37	$17.37
NRC - 2-wire VG -Facility Termination - Disconnect Charge -1st	U1TR2	$37.16	$31.01	NA	NA	$28.03	$38.05	NA	NA	$27.96
NRC - 2-wire VG - Facility Termination - Disconnect Charge -Add'l	U1TR2	$5.88	$12.78	NA	NA	$5.37	$7.23	NA	NA	$3.51
NRC - Manual Svc Order, per LSR	SOMAN	NA	$21.56	NA	$19.99	NA	NA	NA	NA	$19.99
NRC - Manual Svc Order, per LSR disconnect	SOMAN	NA	$3.84	NA	NA	NA	NA	NA	NA	NA
NRC - Electronic Svc Order, per LSR	SOMEC	$3.50	$2.75	$3.50	$3.50	$3.50	$3.50	$3.50	$3.50	$3.50
NRC - Electronic Svc Order, per LSR disconnect	SOMEC	NA	$0.42	NA	NA	NA	NA	NA	NA	NA
NRC - 2-wire VG - Incremental Charge--Manual Svc Order - 1st	SOMAN	$27.37	NA	$18.94	$37.21	$18.14	$25.52	$38.07	$39.63	NA
NRC - 2-wire VG - Incremental Charge--Manual Svc Order - Add'l	SOMAN	$27.57	NA	$18.94	$37.21	$18.14	$25.52	$38.07	$39.63	NA
NRC - 2-wire VG - Incremental Charge--Manual Svc Order-Disconnect--1st	SOMAN	$12.97	NA	NA	NA	$8.06	$11.34	NA	NA	NA
NRC - 2-wire VG - Incremental Charge--Manual Svc Order-Disconnect--Add'l	SOMAN	$12.97	NA	NA	NA	$8.06	$11.34	NA	NA	NA
Common (Shared) Transport										
Common (Shared) Transport per mile per mou	NA	$0.00001	$0.000012	$0.000008	$0.0000049	$0.0000083	$0.0000091	$0.00001	$0.0000121	$0.00004
Common (Shared) Transport Facilities Termination per mou	NA	$0.00045	$0.0005	$0.0004152	$0.000426	$0.00047	$0.0004281	$0.00034	$0.0004672	$0.00036
Interoffice Transport - Dedicated - 4-wire VG										
4-Wire VG - per mile per month	1L5XX	NA	$0.0098	NA	NA	NA	NA	NA	NA	NA
4-Wire VG - Facility Termination per month	U1TV4	NA	$23.64	NA	NA	NA	NA	NA	NA	NA
NRC - 4-wire VG - Facility Termination -1st	U1TV4	NA	$81.09	NA	NA	NA	NA	NA	NA	NA
NRC - 4-wire VG - Facility Termination - Add'l	U1TV4	NA	$54.63	NA	NA	NA	NA	NA	NA	NA
NRC - 4-wire VG -Facility Termination - Disconnect Charge -1st	U1TV4	NA	$31.01	NA	NA	NA	NA	NA	NA	NA
NRC - 4-wire VG - Facility Termination - Disconnect Charge -Add'l	U1TV4	NA	$12.78	NA	NA	NA	NA	NA	NA	NA
NRC - Manual Svc Order, per LSR	SOMAN	NA	$21.56	NA	NA	NA	NA	NA	NA	NA
NRC - Manual Svc Order, per LSR disconnect	SOMAN	NA	$3.84	NA	NA	NA	NA	NA	NA	NA
NRC - Electronic Svc Order, per LSR	SOMEC	NA	$2.77	NA	NA	NA	NA	NA	NA	NA
NRC - Electronic Svc Order, per LSR disconnect	SOMEC	NA	$0.42	NA	NA	NA	NA	NA	NA	NA
NRC - 4-wire VG - Incremental Charge--Manual Svc Order - 1st	SOMAN	NA	NA	NA	NA	NA	NA	NA	NA	NA
NRC - 4-wire VG - Incremental Charge--Manual Svc Order - Add'l	SOMAN	NA	NA	NA	NA	NA	NA	NA	NA	NA
NRC - 4-wire VG - Incremental Charge--Manual Svc Order-Disconnect--1st	SOMAN	NA	NA	NA	NA	NA	NA	NA	NA	NA
NRC - 4-wire VG - Incremental Charge--Manual Svc Order-Disconnect--Add'l	SOMAN	NA	NA	NA	NA	NA	NA	NA	NA	NA
Interoffice Transport - Dedicated - DS0 - 56kbps										
DS0 - per mile per month	1L5XX	$0.0339	$0.0098	$0.0222	$0.0301	$0.0384	$0.0323	$0.0282	$0.0373	$0.1730
DS0 - Facility Termination per month	U1TD5	$17.81	$19.31	$16.45	$26.95	$18.37	$20.64	$17.40	$20.71	$17.74
NRC - DS0 - Facility Termination - 1st	U1TD5	$107.11	$81.11	$79.61	$142.31	$76.20	$106.72	$137.48	$136.44	$55.39
NRC - DS0 - Facility Termination - Add'l	U1TD5	$48.27	$54.83	$36.08	$56.21	$34.54	$48.83	$52.58	$51.37	$17.37
NRC - DS0 -Facility Termination - Disconnect Charge - 1st	U1TD5	$37.16	$31.01	NA	NA	$28.03	$38.05	NA	NA	$27.96
NRC - DS0 - Facility Termination - Disconnect Charge - Add'l	U1TD5	$5.88	$12.78	NA	NA	$5.37	$7.23	NA	NA	$3.51
NRC - Manual Svc Order, per LSR	SOMAN	NA	$21.56	NA	$19.99	NA	NA	NA	NA	$19.99
NRC - Manual Svc Order, per LSR disconnect	SOMAN	NA	$3.84	NA	NA	NA	NA	NA	NA	NA
NRC - Electronic Svc Order, per LSR	SOMEC	$3.50	$2.77	$3.50	$3.50	$3.50	$3.50	$3.50	$3.50	$3.50
NRC - Electronic Svc Order, per LSR disconnect	SOMEC	NA	$0.42	NA	NA	NA	NA	NA	NA	NA
NRC - DS0 -Incremental Charge--Manual Svc Order - 1st	SOMAN	$27.37	NA	$18.94	$37.21	$18.14	$25.52	$38.07	$39.63	NA
NRC -DS0 - Incremental Charge--Manual Svc Order - Add'l	SOMAN	$27.37	NA	$18.94	$37.21	$18.14	$25.52	$38.07	$39.63	NA
NRC - DS0 -Incremental Charge--Manual Svc Order-Disconnect--1st	SOMAN	$12.97	NA	NA	NA	$8.06	$11.34	NA	NA	NA
NRC - DS0 -Incremental Charge--Manual Svc Order-Disconnect—Add'l	SOMAN	$12.97	NA	NA	NA	$8.06	$11.34	NA	NA	NA
Interoffice Transport - Dedicated -DS0 - 64 kbps										
DS0 - per mile per month	1L5XX	$0.0339	$0.0098	$0.0222	$0.0301	$0.0384	$0.0323	$0.0282	$0.0373	$0.1730
DS0 - Facility Termination per month	U1TD6	$17.81	$19.31	$16.45	$26.95	$18.37	$20.64	$17.40	$20.71	$17.74
NRC - DS0 - Facility Termination - 1st	U1TD6	$107.11	$81.11	$79.61	$142.31	$76.20	$106.72	$137.48	$136.44	$55.39
NRC - DS0 - Facility Termination - Add'l	U1TD6	$48.27	$54.83	$36.08	$56.21	$34.54	$48.83	$52.58	$51.37	$17.37

BELLSOUTH/API RATES
NETWORK ELEMENTS
AND OTHER SERVICES

DESCRIPTION	USOC	AL	FL	GA	KY	LA	MS	NC	SC	TN
NRC - DS0 -Facility Termination - Disconnect Charge - 1st	U1TD6	$37.16	$31.01	NA	NA	$28.03	$38.05	NA	NA	$27.96
NRC - DS0 - Facility Termination - Disconnect Charge - Add'l	U1TD6	$5.88	$12.78	NA	NA	$5.37	$7.23	NA	NA	$3.51
NRC - Manual Svc Order, per LSR	SOMAN	NA	$21.56	NA	$19.99	NA	NA	NA	NA	$19.99
NRC - Manual Svc Order, per LSR disconnect	SOMAN	NA	$3.84	NA	NA	NA	NA	NA	NA	NA
NRC - Electronic Svc Order, per LSR	SOMEC	$3.50	$2.77	$3.50	$3.50	$3.50	$3.50	$3.50	$3.50	$3.50
NRC - Electronic Svc Order, per LSR disconnect	SOMEC	NA	$0.42	NA	NA	NA	NA	NA	NA	NA
NRC - DS0 -Incremental Charge--Manual Svc Order - 1st	SOMAN	$27.37	NA	$18.94	$37.21	$18.14	$25.52	$38.07	$39.63	NA
NRC -DS0 - Incremental Charge--Manual Svc Order - Add'l	SOMAN	$27.37	NA	$18.94	$37.21	$18.14	$25.52	$38.07	$39.63	NA
NRC - DS0 -Incremental Charge--Manual Svc Order-Disconnect--1st	SOMAN	$12.97	NA	NA	NA	$8.06	$11.34	NA	NA	NA
NRC - DS0 -Incremental Charge--Manual Svc Order-Disconnect—Add'l	SOMAN	$12.97	NA	NA	NA	$8.06	$11.34	NA	NA	NA
Interoffice Transport - Dedicated - DS1										
DS1 - per mile per month	1L5XX	$0.6920	$0.6013	$0.4523	$0.4500	$0.7831	$0.6598	$0.0783	$0.7598	$0.3525
DS1 - Facility Termination per month	U1TF1	$79.69	$99.79	$78.47	$55.05	$93.40	$74.40	$71.29	$94.98	$75.83
NRC - DS1-Facility Termination - 1st	U1TF1	$198.15	$45.91	$147.07	$298.18	$140.49	$196.28	$217.17	$216.27	$145.98
NRC - DS1 - Facility Termination - Add'l	U1TF1	$148.18	$44.18	$111.75	$231.23	$106.69	$147.31	$163.75	$162.70	$109.85
NRC - DS1 - Facility Termination - Disconnect Charge - 1st	U1TF1	$25.44	$30.30	NA	NA	$20.00	$26.56	NA	NA	$19.55
NRC - DS1 - Facility Termination -Disconnect Charge - Add'l	U1TF1	$20.42	$26.76	NA	NA	$16.34	$21.61	NA	NA	$14.99
NRC - Manual Svc Order, per LSR	SOMAN	NA	$21.56	NA	$19.99	NA	NA	NA	NA	$19.99
NRC - Manual Svc Order, per LSR disconnect	SOMAN	NA	$3.84	NA	NA	NA	NA	NA	NA	NA
NRC - Electronic Svc Order, per LSR	SOMEC	$3.50	$2.77	$3.50	$3.50	$3.50	$3.50	$3.50	$3.50	$3.50
NRC - Electronic Svc Order, per LSR disconnect	SOMEC	NA	$0.42	NA	NA	NA	NA	NA	NA	NA
NRC - DS1 - Incremental Charge--Manual Svc Order - 1st	SOMAN	$27.37	NA	$18.94	NA	$18.14	$25.52	$38.07	$39.63	NA
NRC -DS1 - Incremental Charge--Manual Svc Order - Add'l	SOMAN	$27.37	NA	$18.94	NA	$18.14	$25.52	$38.07	$39.63	NA
NRC - DS1 - Incremental Charge--Manual Svc Order-Disconnect--1st	SOMAN	$12.97	NA	NA	NA	$8.06	$11.31	NA	NA	NA
NRC - DS1 - Incremental Charge--Manual Svc Order-Disconnect—Add'l	SOMAN	$12.97	NA	NA	NA	$8.06	$11.34	NA	NA	NA
Interoffice Transport - Dedicated - DS3										
DS3 - per mile per month	1L5XX	$4.98	$4.17	$2.75	$12.62	$14.04	$15.02	$12.98	$8.13	$5.89
DS3 -Facility Termination per month	U1TF3	$898.15	$1,121.93	$788.00	$1,204	$1,101	$744.38	$720.38	$967.70	$760.20
NRC - DS3 - Facility Termination -1st	U1TF3	$511.77	$557.69	$511.10	$946.23	$611.41	$686.74	$794.94	$606.72	$625.91
NRC - DS3 - Facility Termination - Add'l	U1TF3	$330.92	$325.61	$330.77	$516.89	$304.90	$477.76	$579.55	$423.45	$311.39
NRC - DS3 - Facility Termination - Disconnect Charge - 1st	U1TF3	$121.72	$111.56	$122.31	NA	$102.16	$125.56	NA	NA	$103.36
NRC - DS3 - Facility Termination - Disconnect Charge - Add'l	U1TF3	$118.54	$108.34	$119.14	NA	$99.46	$118.79	NA	NA	$100.59
NRC - Manual Svc Order, per LSR	SOMAN	NA	$21.56	NA	$19.99	NA	NA	NA	NA	$19.99
NRC - Manual Svc Order, per LSR disconnect	SOMAN	NA	$3.84	NA	NA	NA	NA	NA	NA	NA
NRC - Electronic Svc Order, per LSR	SOMEC	$3.50	$2.77	$3.50	$3.50	$3.50	$3.50	$3.50	$3.50	$3.50
NRC - Electronic Svc Order, per LSR disconnect	SOMEC	NA	$0.42	NA	NA	NA	NA	NA	NA	NA
NRC - DS3 - Incremental Charge--Manual Svc Order - 1st	SOMAN	$38.48	NA	$37.96	$93.12	$50.25	$64.97	$91.26	$54.26	NA
NRC - DS3 - Incremental Charge--Manual Svc Order - Add'l	SOMAN	$38.48	NA	$37.96	$93.12	$50.25	$64.97	$91.26	$54.26	NA
NRC - DS3 - Incremental Charge--Manual Svc Order-Disconnect--1st	SOMAN	$19.03	NA	$18.23	NA	$20.94	$27.08	NA	NA	NA
NRC - DS3 - Incremental Charge--Manual Svc Order-Disconnect—Add'l	SOMAN	$19.03	NA	$18.23	NA	$20.94	$27.08	NA	NA	NA
Interoffice Transport - Dedicated - STS-1										
STS-1 - per mile per month	1L5XX	$4.98	$4.17	$2.72	$12.62	$14.04	$13.48	$6.29	$8.13	$6.88
STS-1 -Facility Termination per month	U1TFS	$895.41	$1,105.98	$783.63	$1,204	$1,101	$692.52	$800.94	$967.58	$838.65
NRC - STS-1 - Facility Termination -1st	U1TFS	$511.77	$557.69	$449.91	$946.23	$611.41	$858.15	$624.86	$606.72	$858.26
NRC - STS-1 - Facility Termination - Add'l	U1TFS	$330.92	$325.61	$119.14	$516.89	$304.90	$524.58	$436.36	$423.45	$525.25
NRC - STS-1 - Facility Termination - Disconnect Charge - 1st	U1TFS	$121.72	$111.56	$137.17	NA	$102.16	$125.56	NA	NA	$103.36
NRC - STS-1 - Facility Termination - Disconnect Charge - Add'l	U1TFS	$118.54	$108.34	$119.14	NA	$99.46	$118.79	NA	NA	$100.59
NRC - Manual Svc Order, per LSR	SOMAN	NA	$21.56	NA	$19.99	NA	NA	NA	NA	$19.99
NRC - Manual Svc Order, per LSR disconnect	SOMAN	NA	$3.84	NA	NA	NA	NA	NA	NA	NA
NRC - Electronic Svc Order, per LSR	SOMEC	$3.50	$2.77	$3.50	$3.50	$3.50	$3.50	$3.50	$3.50	$3.50
NRC - Electronic Svc Order, per LSR disconnect	SOMEC	NA	$0.43	NA	NA	NA	NA	NA	NA	NA
NRC - STS-1 - Incremental Charge--Manual Svc Order - 1st	SOMAN	$38.48	NA	$61.19	$93.12	$50.25	$94.50	$55.00	$54.26	NA
NRC - STS-1 - Incremental Charge--Manual Svc Order - Add'l	SOMAN	$38.48	NA	$61.19	$93.12	$50.25	$94.50	$55.00	$54.26	NA

BELLSOUTH/API RATES
NETWORK ELEMENTS
AND OTHER SERVICES

DESCRIPTION	USOC	AL	FL	GA	KY	LA	MS	NC	SC	TN
NRC - DS3 - Incremental Charge--Manual Svc Order-Disconnect--1st	SOMAN	$19.03	NA	$3.17	NA	$20.94	$27.08	NA	NA	NA
NRC - DS3 - Incremental Charge--Manual Svc Order-Disconnect—Add'l	SOMAN	$19.03	NA	$3.17	NA	$20.94	$27.08	NA	NA	NA
Interoffice Transport - Dedicated - OC3										
OC3 -per mile per month	1L5XX	$7.35	$8.24	$4.37	$27.97	$23.89	$18.35	$14.10	$9.75	$13.45
OC3 -Facility Termination per month		$2,475	$3,020.08	$2,187.00	$3,390	$2,990	$1,892.00	$2,071	$2,802	$2,124
NRC - OC-3 - Facility Termination - 1st		$820.85	$869.65	$819.29	$1,399	$927.35	$1,283.00	$1,381	$915.64	$950.10
NRC - OC-3 - Facility Termination - Add'l		$317.48	$312.05	$317.38	$516.89	$304.90	$404.94	$509.93	$410.02	$311.39
NRC - OC-3 - Facility Termination - Disconnect Charge - 1st		$121.72	$111.56	$122.31	NA	$102.16	$134.07	$131.65	NA	$103.36
NRC - OC-3 - Facility Termination - Disconnect Charge - Add'l		$118.54	$108.34	$119.14	NA	$99.46	$130.59	$128.19	NA	$100.59
NRC - Manual Svc Order, per LSR	SOMAN	NA	$21.56	NA	$19.99	NA	NA	NA	NA	$19.99
NRC - Manual Svc Order, per LSR disconnect	SOMAN	NA	$3.84	NA	NA	NA	NA	NA	NA	NA
NRC - Electronic Svc Order, per LSR	SOMEC	$3.50	$2.77	$3.50	$3.50	$3.50	$3.50	$3.50	$3.50	$3.50
NRC - Electronic Svc Order, per LSR disconnect	SOMEC	NA	$0.43	NA	NA	NA	NA	NA	NA	NA
NRC - OC3 - Incremental Cost - Manual Svc Order vs. Electronic-1st	SOMAN	$38.48	NA	$37.55	$93.12	$50.25	$68.62	$94.77	$54.26	NA
NRC - OC3 - Incremental Cost - Manual Svc Order vs. Electronic-Add'l	SOMAN	$38.48	NA	$37.55	$93.12	$50.25	$68.62	$94.77	$54.26	NA
NRC - OC3 - Incremental Cost - Manual Svc Order vs. Electronic-Disconnect-1	SOMAN	$19.03	NA	$18.03	NA	$20.94	$28.59	$29.76	NA	NA
NRC - OC3 - Incremental Cost - Manual Svc Order vs. Electronic-Disconnect-A	SOMAN	$19.03	NA	$18.03	NA	$20.94	$28.59	$29.76	NA	NA
Interoffice Transport - Dedicated - OC12										
OC12 -per mile per month	1L5XX	$19.26	$26.45	$15.05	$84.88	$74.44	$60.42	$48.55	$32.52	$49.80
OC12 -Facility Termination		$9,763	$11,599.14	$8,202.00	$12,344	$11,517	$7,182	$7,676	$11,132	$8,015
NRC - OC12- Facility Termination - 1st		$1,036	$1,086.66	$1,034.00	$1,713	$1,147	$1,598	$1,381	$1,131	$1,176
NRC - OC12- Facility Termination - Add'l		$317.48	$312.05	$317.38	$516.89	$304.90	$404.94	$509.93	$410.02	$311.39
NRC - OC12 - Facility Termination - Disconnect Chg - 1st		$121.72	$111.56	$122.31	NA	$102.16	$134.07	$131.65	NA	$103.36
NRC - OC12 - Facility Termination - Disconnect Chg - Add'l		$118.54	$108.34	$119.14	NA	$99.46	$130.59	$128.19	NA	$100.59
NRC - Manual Svc Order, per LSR	SOMAN	NA	$21.56	NA	$19.99	NA	NA	NA	NA	$19.99
NRC - Manual Svc Order, per LSR disconnect	SOMAN	NA	$3.84	NA	NA	NA	NA	NA	NA	NA
NRC - Electronic Svc Order, per LSR	SOMEC	$3.50	$2.77	$3.50	$3.50	$3.50	$3.50	$3.50	$3.50	$3.50
NRC - Electronic Svc Order, per LSR disconnect	SOMEC	NA	$0.43	NA	NA	NA	NA	NA	NA	NA
NRC - OC12 - Incremental Cost - Manual Svc Order vs. Electronic-1st	SOMAN	$38.48	NA	$37.55	$93.12	$50.25	$68.62	$94.77	$54.26	NA
NRC - OC12 - Incremental Cost - Manual Svc Order vs. Electronic-Add'l	SOMAN	$38.48	NA	$37.55	$93.12	$50.25	$68.62	$94.77	$54.26	NA
NRC - OC12 - Incremental Cost - Manual Svc Order vs. Elect-Disconnect-1st	SOMAN	$19.03	NA	$18.03	NA	$20.94	$28.59	$29.76	NA	NA
NRC - OC12 - Incremental Cost - Manual Svc Order vs. Elect-Disconnect-Add'	SOMAN	$19.03	NA	$18.03	NA	$20.94	$28.59	$29.76	NA	NA
Interoffice Transport - Dedicated - OC48										
OC48 -per mile per month	1L5XX	$30.65	$34.07	$25.70	$138.02	$128.59	$102.43	$120.02	$45.92	$106.55
OC48 -Facility Termination per month		$11,691	$12,460.76	$11,134.00	$16,017	$14,950	$11,480	$10,952	$967.58	$11,632
OC48 -per Interface OC12 on OC48 per month		$1,424	$1,199.42	$1,137.00	$1,497	$1,451	$1,351.00	$582.66	$1,561	$1,170
NRC - OC48 - Facility Termination - 1st		$1,036	$1,086.66	$1,034.00	$1,713	$1,147	$1,598.00	$1,722	$1,131	$1,176
NRC - OC48 - Facility Termination - Add'l		$317.48	$312.05	$317.38	$516.89	$304.90	$404.94	$542.73	$410.02	$311.39
NRC - OC48 - Interface OC12 on OC48 - 1st		$540.10	$543.72	$539.36	$844.21	$532.13	$729.04	$720.81	$635.04	$544.55
NRC - OC48 - Interface OC12 on OC48 - Add'l		$317.48	$312.05	$317.38	$516.89	$304.90	$404.94	$400.38	$410.02	$311.39
NRC - OC48 - Facility Termination - Disconnect Chg - 1st		$121.72	$111.56	$122.31	NA	$102.16	$134.07	$131.65	NA	$103.36
NRC - OC48 - Facility Termination - Disconnect Chg - Add'l		$118.54	$108.34	$119.14	NA	$99.46	$130.59	$128.19	NA	$100.59
NRC - OC48 - Interface OC12 on OC48 - Disconnect - 1st		$121.72	$111.56	$122.31	NA	$102.16	$134.07	$131.65	NA	$103.36
NRC - OC48 - Interface OC12 on OC48 - Disconnect - Add'l		$118.54	$108.34	$119.14	NA	$99.46	$130.59	$128.19	NA	$100.59
NRC - Manual Svc Order, per LSR	SOMAN	NA	$21.56	NA	$19.99	NA	NA	NA	NA	$19.99
NRC - Manual Svc Order, per LSR disconnect	SOMAN	NA	$3.84	NA	NA	NA	NA	NA	NA	NA
NRC - Electronic Svc Order, per LSR	SOMEC	$3.50	$2.77	$3.50	$3.50	$3.50	$3.50	$3.50	$3.50	$3.50
NRC - Electronic Svc Order, per LSR disconnect	SOMEC	NA	$0.43	NA	NA	NA	NA	NA	NA	NA
NRC - OC48 - Incremental Cost - Manual Svc. Order vs. Electronic-1st	SOMAN	$38.48	NA	$37.55	$93.12	$50.25	$68.62	$69.34	$54.26	NA
NRC - OC48 - Incremental Cost - Manual Svc. Order vs. Electronic-Add'l	SOMAN	$38.48	NA	$37.55	$93.12	$50.25	$68.62	$69.34	$54.26	NA
NRC - OC48 - Interface- Incremental Cost - Manual Svc. Order vs. Electronic-1	SOMAN	$38.48	NA	$37.55	$93.12	$50.25	$68.62	$69.34	$54.26	NA
NRC - OC48 - Interface- Incremental Cost - Manual Svc. Order vs. Electronic-A	SOMAN	$38.48	NA	$37.55	$93.12	$50.25	$68.62	$69.34	$54.26	NA
NRC - OC48 - Incremental Cost - Manual Svc. Order vs. Elect-Disconnect-1st	SOMAN	$19.03	NA	$18.03	NA	$20.94	$28.59	$29.76	NA	NA

BELLSOUTH/API RATES
NETWORK ELEMENTS
AND OTHER SERVICES

DESCRIPTION	USOC	AL	FL	GA	KY	LA	MS	NC	SC	TN
NRC - OC48 - Incremental Cost - Manual Svc. Order vs. Elect-Disconnect-Add	SOMAN	$19.03	NA	$18.03	NA	$20.94	$28.59	$29.76	NA	NA
NRC - OC48-Interface-Incremental Cost-Manual Svc. Order vs. Elec-Disconne	SOMAN	$19.03	NA	$18.03	NA	$20.94	$28.59	$29.76	NA	NA
NRC - OC48-Interface-Incremental Cost-Manual Svc. Order vs. Elec-Disconne	SOMAN	$19.03	NA	$18.03	NA	$20.94	$28.59	$29.76	NA	NA
UNBUNDLED CHANNELIZATION										
DS3 Channelization (DS3 to DS1)										
per Channelized System (28 DS1) per month	MQ3	$225.36	$220.97	$182.04	$236.32	$245.84	$229.30	$226.81	$200.01	$222.98
NRC - 1st	MQ3	$265.87	$356.40	$265.91	$425.41	$259.76	$356.80	$351.95	$321.54	$265.08
NRC - Add'l	MQ3	$188.51	$188.00	$188.78	$303.33	$182.64	$247.40	$243.76	$234.30	$185.94
NRC -1st - Disconnect	MQ3	$71.76	$61.64	$72.50	NA	$60.96	$79.94	$77.90	NA	$61.09
NRC -Add'l - Disconnect	MQ3	$52.03	$58.98	$59.96	NA	$50.46	$65.20	$63.32	NA	$50.31
per Interface per month (COCI)	UC1D1	$17.22	$14.40	$11.02	$8.52	$7.55	$5.58	$4.61	$11.99	$3.91
NRC - 1st	UC1D1	$12.05	$13.16	$12.02	$15.86	$12.29	$15.85	$15.76	$12.05	$12.61
NRC - Add'l	UC1D1	$8.69	$9.43	$8.66	$11.36	$8.80	$11.35	$11.28	$8.68	$9.03
NRC - Manual Svc Order, per LSR	SOMAN	NA	$21.56	NA	$19.99	NA	NA	NA	NA	$19.99
NRC - Manual Svc Order, per LSR disconnect	SOMAN	NA	$3.84	NA	NA	NA	NA	NA	NA	NA
NRC - Electronic Svc Order, per LSR	SOMEC	$3.50	$2.77	$3.50	$3.50	$3.50	$3.50	$3.50	$3.50	$3.50
NRC - Electronic Svc Order, per LSR disconnect	SOMEC	NA	$0.43	NA	NA	NA	NA	NA	NA	NA
Channel System - Incremental Cost - Manual Svc. Order vs. Electronic -1st	SOMAN	$15.61	NA	$14.75	$41.47	$19.74	$26.95	$28.13	$25.59	$21.71
Channel System - Incremental Cost - Manual Svc. Order vs. Electronic -Add'l	SOMAN	$7.39	NA	$6.55	$11.99	$8.77	$11.98	$13.33	$8.92	$10.46
Incremental Cost-Manual Svc. Order vs. Elect -Disconnect - 1st	SOMAN	$11.67	NA	$10.60	NA	$12.43	$16.97	$18.26	NA	$14.21
Incremental Cost-Manual Svc. Order vs. Elect -Disconnect - Add'l	SOMAN	$0.9469	NA	NA	NA	NA	NA	$1.48	NA	$1.46
DS1 Channelization (DS1 to DS0)										
per Channelized System (24 DS0) per month	MQ1	$136.82	$153.60	$126.22	$200.01	$209.87	$146.87	$177.72	$147.51	$165.21
NRC - 1st	MQ1	$197.98	$182.14	$198.22	$302.82	$193.63	$271.52	$267.19	$220.89	$197.21
NRC - Add'l	MQ1	$123.12	$125.18	$123.59	$184.20	$118.37	$164.56	$161.43	$137.15	$119.99
NRC -1sr - Disconnect	MQ1	$30.18	$19.52	$31.03	NA	$26.44	$36.38	$34.55	NA	$25.66
NRC -Add'l - Disconnect	MQ1	$18.86	$18.14	$19.75	NA	$16.83	$11.98	$21.14	NA	$15.81
- Interface (COCI)										
per OCU-DP(data) card per month (2.4-64kbs)	1D1DD	$1.66	$2.20	$1.86	$2.94	$3.12	$2.86	$2.88	$2.34	$2.46
NRC - 1st	1D1DD	$12.05	$13.16	$12.02	$15.86	$12.29	$15.85	$15.76	$12.05	$12.61
NRC - Add'l	1D1DD	$8.69	$9.43	$8.66	$11.36	$8.80	$11.35	$11.28	$8.68	$9.03
per BRITE card per month	UC1CA	$3.41	$3.83	$3.71	$4.04	$4.18	$3.88	$3.76	$4.21	$3.33
NRC - 1st	UC1CA	$12.05	$13.16	$12.02	$15.86	$12.29	$15.85	$15.76	$12.05	$12.61
NRC - Add'l	UC1CA	$8.69	$9.43	$8.66	$11.36	$8.80	$11.35	$11.28	$8.68	$9.03
per VG card per month (DS0)	1D1VG	$0.8586	$1.45	$1.17	$1.40	$1.62	$1.45	$1.64	$1.47	$1.25
NRC - 1st	1D1VG	$12.05	$13.16	$12.02	$15.86	$12.29	$15.85	$15.76	$12.05	$12.61
NRC - Add'l	1D1VG	$8.69	$9.43	$8.66	$11.36	$8.80	$11.35	$11.28	$8.68	$9.03
NRC - Manual Svc Order, per LSR	SOMAN	NA	$21.56	NA	$19.99	NA	NA	NA	NA	$19.99
NRC - Manual Svc Order, per LSR disconnect	SOMAN	NA	$3.84	NA	NA	NA	NA	NA	NA	NA
NRC - Electronic Svc Order, per LSR	SOMEC	$3.50	$2.77	$3.50	$3.50	$3.50	$3.50	$3.50	$3.50	$3.50
NRC - Electronic Svc Order, per LSR disconnect	SOMAN	NA	$0.43	NA	NA	NA	NA	NA	NA	NA
Channel System - Incremental Cost - Manual Svc. Order vs. Electronic -1st	SOMAN	$15.61	NA	$14.75	$41.47	$19.74	$26.95	$28.13	$25.59	$25.66
Channel System - Incremental Cost - Manual Svc. Order vs. Electronic -Add'l	SOMAN	$7.39	NA	$6.55	$11.99	$8.77	$11.98	$13.33	$8.92	$15.81
Incremental Cost-Manual Svc. Order vs. Elect -Disconnect - 1st	SOMAN	$11.67	NA	$10.70	NA	$12.43	$16.97	$18.26	NA	$14.21
Incremental Cost-Manual Svc. Order vs. Elect -Disconnect - Add'l	SOMAN	$0.9469	NA	$0.00	NA	NA	NA	$1.48	NA	$1.46
UNBUNDLED DARK FIBER										
Dark Fiber - Interoffice (four fiber strands) per route mile or fraction thereof, per mo	1L5DF	$25.80	$28.82	$24.96	$31.95	$32.28	$33.93	$29.86	$36.75	$28.60
NRC - Per each four-fiber dark fiber arrangement - 1st	UDF14	$1,739.00	$1,278.62	$1,737.00	$1,741.00	$1,746.00	$1,741.00	$1,738.00	$1,747.00	$1,742.00
NRC - Per each four-fiber dark fiber arrangement - Add'l	UDF14	$563.09	$275.82	$562.39	$563.75	$565.20	$563.79	$562.82	$565.53	$564.08
NRC -Disconnect--1st	UDF14	NA	$587.64	NA	NA	NA	NA	NA	NA	NA
NRC -Disconnect--Add'l	UDF14	NA	$366.34	NA	NA	NA	NA	NA	NA	NA
Dark Fiber - Local Channel(four fiber strands) per route mile or fraction thereof, per	1L5DC	$70.82	$58.35	$54.63	$49.07	$64.72	$71.55	$56.47	$100.37	$60.06

BELLSOUTH/API RATES
NETWORK ELEMENTS
AND OTHER SERVICES

DESCRIPTION	USOC	AL	FL	GA	KY	LA	MS	NC	SC	TN
NRC - Per each four-fiber dark fiber arrangement - 1st	UDFC4	$1,739.00	$1,278.62	$1,737.00	$1,741.00	$1,746.00	$1,741.00	$1,738.00	$1,747.00	$1,742.00
NRC - Per each four-fiber dark fiber arrangement - Add'l	UDFC4	$563.09	$275.82	$562.39	$563.75	$565.20	$563.79	$562.82	$565.53	$564.08
NRC -Disconnect--1st	UDFC4	NA	$587.64	NA	NA	NA	NA	NA	NA	NA
NRC -Disconnect--Add'l	UDFC4	NA	$366.34	NA	NA	NA	NA	NA	NA	NA
Dark Fiber - Local Loop (four fiber strands) per route mile or fraction thereof, per m	1L5DL	$70.82	$58.35	$54.63	$49.07	$64.72	$71.55	$56.47	$100.37	$60.06
NRC - Per each four-fiber dark fiber arrangement - 1st	UDFL4	$1,739.00	$1,278.62	$1,737.00	$1,741.00	$1,746.00	$1,741.00	$1,738.00	$1,747.00	$1,742.00
NRC - Per each four-fiber dark fiber arrangement - Add'l	UDFL4	$563.09	$275.82	$562.39	$563.75	$565.20	$563.79	$562.82	$565.53	$564.08
NRC -Disconnect--1st	UDFL4	NA	$587.64	NA	NA	NA	NA	NA	NA	NA
NRC -Disconnect--Add'l	UDFL4	NA	$366.34	NA	NA	NA	NA	NA	NA	NA
NOTES:										
Interim rates subject to true-up.										

BELLSOUTH/API RATES
NETWORK ELEMENTS
AND OTHER SERVICES

DESCRIPTION	USOC	AL	FL	GA	KY	LA	MS	NC	SC	TN
UNBUNDLED LOOP COMBINATIONS										
Unbundled Loop/Port Combinations (Note 4)										
MARKET RATES (INCLUDING ALL VERTICAL FEATURES) (Note 1)										
Density Zone 1 / Top 8 MSAs in BellSouth Region			**Orlando, Ft. Lauderdale, Miami**	**Atlanta**		**New Orleans**		**Greensboro-Winston Salem-Highpoint/ Charlotte-Gastonia-Rock Hill**		**Nashville**
Customers with 4 or more DS0 Equivalent										
Currently Combined (Note2)										
2-Wire Voice Grade Loop with 2-Wire Line Port (Res. and Bus.)										
2-Wire Voice Grade Line Port (Res.), per month										
2- wire voice unbundled port - residence	UEPRL	NA	$14.00	$14.00	NA	$14.00	NA	$14.00	NA	$14.00
2-wire voice unbundled port with caller ID - residence	UEPRC	NA	$14.00	$14.00	NA	$14.00	NA	$14.00	NA	$14.00
2-wire voice unbundled port outgoing only - residence	UEPRO	NA	$14.00	$14.00	NA	$14.00	NA	$14.00	NA	$14.00
2-wire voice grade unbundled Alabama extended local dialing parity port with caller ID	UEPAR	NA	NA	NA	NA	NA	NA	NA	NA	NA
2-wire voice grade unbundled Kentucky extended local dialing parity port with caller ID	UEPRM	NA	NA	NA	NA	NA	NA	NA	NA	NA
2-wire voice grade unbundled Louisiana extended local dialing parity port with caller ID	UEPAS	NA	NA	NA	NA	$14.00	NA	NA	NA	NA
2-wire voice grade unbundled Mississippi extended local dialing parity port with caller ID	UEPAT	NA	NA	NA	NA	NA	NA	NA	NA	NA
2-wire voice grade unbundled South Carolina extended local dialing parity port with caller ID	UEPAU	NA	NA	NA	NA	NA	NA	NA	NA	NA
2-wire voice grade unbundled Tennessee extended local dialing parity port with caller ID	UEPAQ	NA	NA	NA	NA	NA	NA	NA	NA	$14.00
2-wire voice unbundled Florida area calling with caller ID - residence	UEPAF	NA	$14.00	NA	NA	NA	NA	NA	NA	NA
2-wire voice unbundled Louisiana Area Plus with caller ID - residence (RUL)	UEPAG	NA	NA	NA	NA	$14.00	NA	NA	NA	NA
2-wire voice unbundled Louisiana Area Plus with caller ID - residence (AC7)	UEPAH	NA	NA	NA	NA	$14.00	NA	NA	NA	NA
2-wire voice unbundled South Carolina Area Calling port with Caller ID - residence (LW8)	UEPAJ	NA	NA	NA	NA	NA	NA	NA	NA	NA
2-wire voice unbundled Tennessee Area Calling port with Caller ID - residence (F2R)	UEPAK	NA	NA	NA	NA	NA	NA	NA	NA	$14.00
2-wire voice unbundled Tennessee Area Calling port with Caller ID - residence (TACER)	UEPAL	NA	NA	NA	NA	NA	NA	NA	NA	$14.00
2-wire voice unbundled Tennessee Area Calling port with Caller ID - residence (TACSR)	UEPAM	NA	NA	NA	NA	NA	NA	NA	NA	$14.00
2-wire voice unbundled Tennessee Area Calling port with Caller ID - residence (1MF2X)	UEPAN	NA	NA	NA	NA	NA	NA	NA	NA	$14.00
2-wire voice unbundled Tennessee Area Calling port with Caller ID - residence (2MR)	UEPAO	NA	NA	NA	NA	NA	NA	NA	NA	$14.00
2-wire voice unbundled res, low usage line port with Caller ID (LUM)	UEPAP	NA	$14.00	$14.00	NA	$14.00	NA	$14.00	NA	$14.00
2-Wire Voice Grade Line Port (Bus.), per month										
2-wire voice unbundled port without Caller ID	UEPBL	NA	$14.00	$14.00	NA	$14.00	NA	$14.00	NA	$14.00
2-wire voice unbundled port with unbundled port with Caller+E484 ID	UEPBC	NA	$14.00	$14.00	NA	$14.00	NA	$14.00	NA	$14.00
2-wire voice unbundled outgoing only port	UEPBO	NA	$14.00	$14.00	NA	$14.00	NA	$14.00	NA	$14.00
2-wire voice grade unbundled Alabama extended local dialing parity port with caller ID	UEPAW	NA	NA	NA	NA	NA	NA	NA	NA	NA
2-wire voice grade unbundled Kentucky extended local dialing parity port with caller ID	UEPBM	NA	NA	NA	NA	NA	NA	NA	NA	NA
2-wire voice grade unbundled Louisiana extended local dialing parity port with caller ID	UEPAX	NA	NA	NA	NA	$14.00	NA	NA	NA	NA
2-wire voice grade unbundled Mississippi extended local dialing parity port with caller ID	UEPAY	NA	NA	NA	NA	NA	NA	NA	NA	NA
2-wire voice grade unbundled South Carolina extended local dialing parity port with caller ID	UEPAZ	NA	NA	NA	NA	NA	NA	NA	NA	NA

BELLSOUTH/API RATES
NETWORK ELEMENTS
AND OTHER SERVICES

DESCRIPTION	USOC	AL	FL	GA	KY	LA	MS	NC	SC	TN
2-wire voice grade unbundled Tennessee extended local dialing parity port with caller ID	UEPAV	NA	NA	NA	NA	NA	NA	NA	NA	$14.00
2-wire voice unbundled incoming only port with Caller ID	UEPB1	NA	$14.00	$14.00	NA	$14.00	NA	$14.00	NA	$14.00
2-wire voice unbundled LA Bus Area Calling Port with Caller ID (BUC)	UEPAA	NA	NA	NA	NA	$14.00	NA	NA	NA	NA
2-wire voice unbundled SC Bus Area Calling Port with Caller ID (LMB)	UEPAB	NA	NA	NA	NA	NA	NA	NA	NA	NA
2-wire voice unbundled TN Bus 2-Way Area Calling Port Economy Option (TACC1)	UEPAC	NA	NA	NA	NA	NA	NA	NA	NA	$14.00
2-wire voice unbundled TN Bus 2-Way Area Calling Port Standard Option (TACC2)	UEPAD	NA	NA	NA	NA	NA	NA	NA	NA	$14.00
2-wire voice unbundled TN Bus 2-WAY Collierville and Memphis Local Calling Port (B2F)	UEPAE	NA	NA	NA	NA	NA	NA	NA	NA	$14.00
2-Wire Voice Grade Loop (SL1) (Res. and Bus.)										
RC - 2-Wire Voice Grade Loop - Statewide	UEPLX	NA	NA	NA	NA	NA	NA	$14.18	NA	NA
RC - 2-Wire Voice Grade Loop Zone 1	UEPLX	NA	$14.90	$10.80	NA	$14.05	NA	NA	NA	$15.92
RC - 2-Wire Voice Grade Loop Zone 2	UEPLX	NA	$18.51	$12.47	NA	$24.14	NA	NA	NA	$20.79
RC - 2-Wire Voice Grade Loop Zone 3	UEPLX	NA	$24.25	$19.83	NA	$49.30	NA	NA	NA	$27.18
Combination Rates										
RC - 2-Wire Voice Grade Loop with 2-Wire Line Port, Statewide	Note 8	NA	NA	NA	NA	NA	NA	$28.18	NA	NA
RC - 2-Wire Voice Grade Loop with 2-Wire Line Port, Zone 1 (Note 6)	Note 8	NA	$28.90	$24.80	NA	$28.05	NA	NA	NA	$29.92
RC - 2-Wire Voice Grade Loop with 2-Wire Line Port, Zone 2 (Note 6)	Note 8	NA	$32.51	$26.47	NA	$38.14	NA	NA	NA	$34.79
RC - 2-Wire Voice Grade Loop with 2-Wire Line Port, Zone 3 (Note 6)	Note 8	NA	$38.25	$33.83	NA	$63.30	NA	NA	NA	$41.18
Nonrecurring Charges										
2-Wire Voice Grade Line Port (Res. And Bus.)										
NRC - 2- wire voice grade unbundled port/loop combination - 1st, with change		NA	$41.50	$41.50	NA	$41.50	NA	$41.50	NA	$41.50
NRC - 2- wire voice grade unbundled port/loop combination - Add'l, with change		NA	$41.50	$41.50	NA	$41.50	NA	$41.50	NA	$41.50
NRC - 2- wire voice grade unbundled port/loop combination - 1st, no change		NA	$41.50	$41.50	NA	$41.50	NA	$41.50	NA	$41.50
NRC - 2- wire voice grade unbundled port/loop combination - Add'l, no change		NA	$41.50	$41.50	NA	$41.50	NA	$41.50	NA	$41.50
NRC - 2-Wire Voice Grade Loop/Line Port Combination - Subsequent		NA	$10.00	$10.00	NA	$10.00	NA	$10.00	NA	$10.00
NRC - 2-Wire Voice Grade Loop/Line Port Combination - OSS LSR Charge, Electronic, per LSR received from the CLEC by one of the OSS interactive interfaces	SOMEC	NA	$2.75	$3.50	NA	$3.50	NA	$3.50	NA	$3.50
NRC - 2-Wire Voice Grade Loop/Line Port Combination - Incremental Cost - Manual Svc.Order vs. Electronic - 1st	SOMAN	NA	$21.56	$33.76	NA	$31.92	NA	$40.18	NA	$30.89
NRC - 2-Wire Voice Grade Loop/Line Port Combination - Incremental Cost - Manual Svc.Order vs. Electronic - Add'l	SOMAN	NA	$21.56	$7.86	NA	$7.32	NA	$9.45	NA	$7.03
NRC- 2 Wire Voice Grade Loop/Line Port Combination - Subsequent Database Update - Electronic		NA	TBD	TBD	NA	$2.11	NA	$1.42	NA	TBD
NRC- 2 Wire Voice Grade Loop/Line Port Combination - Subsequent Database Update - Manual Service Order		NA	TBD	TBD	NA	$5.12	NA	$10.27	NA	TBD
NRC - Electronic Service Order Disconnect		NA	$0.42	NA	NA	NA	NA	NA	NA	NA
NRC - Incremental Manual Service Order Disconnect		NA	$3.84	$20.00	NA	$20.00	NA	$20.00	NA	$20.00
2-Wire Voice Grade Loop with 2-Wire Line Port PBX										
2-Wire Analog Line Port (PBX), per month										
2 WIRE VOICE UNBUNDLED COMBINATION 2-WAY PBX TRUNK - Residence	UEPRD	NA	$14.00	$14.00	NA	$14.00	NA	$14.00	NA	$14.00
LINE SIDE UNBUNDLED COMBINATION 2-WAY PBX TRUNK - BUSINESS	UEPPC	NA	$14.00	$14.00	NA	$14.00	NA	$14.00	NA	$14.00
LINE SIDE UNBUNDLED OUTWARD PBX TRUNK - BUSINESS	UEPPO	NA	$14.00	$14.00	NA	$14.00	NA	$14.00	NA	$14.00
LINE SIDE UNBUNDLED INCOMING PBX TRUNK - BUSINESS	UEPP1	NA	$14.00	$14.00	NA	$14.00	NA	$14.00	NA	$14.00
2-WIRE VOICE UNBUNDLED 2-WAY COMBINATION PBX ALABAMA CALLING PORT	UEPA2	NA	NA	NA	NA	NA	NA	NA	NA	NA
2-WIRE VOICE UNBUNDLED 2-WAY COMBINATION PBX LOUISIANA CALLING PORT	UEPL2	NA	NA	NA	NA	$14.00	NA	NA	NA	NA
2-WIRE VOICE UNBUNDLED PBX LD TERMINAL PORTS	UEPLD	NA	$14.00	$14.00	NA	$14.00	NA	$14.00	NA	$14.00

BELLSOUTH/API RATES
NETWORK ELEMENTS
AND OTHER SERVICES

DESCRIPTION	USOC	AL	FL	GA	KY	LA	MS	NC	SC	TN
2-WIRE VOICE UNBUNDLED 2-WAY COMBINATION PBX TENNESSEE CALLING PORT	UEPT2	NA	NA	NA	NA	NA	NA	NA	NA	$14.00
2-WIRE VOICE UNBUNDLED 1-WAY OUTGOING PBX TENNESSEE CALLING PORT	UEPTO	NA	NA	NA	NA	NA	NA	NA	NA	$14.00
2-WIRE VOICE UNBUNDLED 2-WAY COMBINATION PBX USAGE PORT	UEPXA	NA	$14.00	$14.00	NA	$14.00	NA	$14.00	NA	$14.00
2-WIRE VOICE UNBUNDLED PBX TOLL TERMINAL HOTEL PORTS	UEPXB	NA	$14.00	$14.00	NA	$14.00	NA	$14.00	NA	$14.00
2-WIRE VOICE UNBUNDLED PBX LD DDD TERMINALS PORT	UEPXC	NA	$14.00	$14.00	NA	$14.00	NA	$14.00	NA	$14.00
2-WIRE VOICE UNBUNDLED PBX LD TERMINAL SWITCHBOARD PORT	UEPXD	NA	$14.00	$14.00	NA	$14.00	NA	$14.00	NA	$14.00
2-WIRE VOICE UNBUNDLED PBX LD TERMINAL SWITCHBOARD IDD CAPABLE PORT	UEPXE	NA	$14.00	$14.00	NA	$14.00	NA	$14.00	NA	$14.00
2-WIRE VOICE UNBUNDLED 2-WAY PBX KENTUCKY ROOM AREA CALLING PORT WITHOUT LUD	UEPXF	NA	NA	NA	NA	NA	NA	NA	NA	NA
2-WIRE VOICE UNBUNDLED PBX KENTUCKY LUD AREA CALLING PORT	UEPXG	NA	NA	NA	NA	NA	NA	NA	NA	NA
2-WIRE VOICE UNBUNDLED PBX KENTUCKY PREMIUM CALLING PORT	UEPXH	NA	NA	NA	NA	NA	NA	NA	NA	NA
2-WIRE VOICE UNBUNDLED 2-WAY KENTUCKY AREA CALLING PORT WITHOUT LUD	UEPXJ	NA	NA	NA	NA	NA	NA	NA	NA	NA
2-WIRE VOICE UNBUNDLED 2-WAY PBX LOUISIANA LOCAL OPTIONAL CALLING PORT	UEPXK	NA	NA	NA	NA	$14.00	NA	NA	NA	NA
2-WIRE VOICE UNBUNDLED 2-WAY PBX HOTEL/HOSPITAL ECONOMY ADMINISTRATIVE CALLING PORT	UEPXL	NA	$14.00	$14.00	NA	$14.00	NA	$14.00	NA	$14.00
2-WIRE VOICE UNBUNDLED 2-WAY PBX HOTEL/HOSPITAL ECONOMY ROOM CALLING PORT	UEPXM	NA	$14.00	$14.00	NA	$14.00	NA	$14.00	NA	$14.00
2-WIRE VOICE UNBUNDLED 1-WAY OUTGOING PBX HOTEL/HOSPITAL ECONOMY ADMINIATRATIVE CALLING PORTTENNESSEE CALLING PORT	UEPXN	NA	NA	NA	NA	NA	NA	NA	NA	$14.00
2-WIRE VOICE UNBUNDLED 1-WAY OUTGOING PBX HOTEL/HOSPITAL DIACOUNT ROOM CALLING PORT	UEPXO	NA	$14.00	$14.00	NA	$14.00	NA	$14.00	NA	$14.00
2-WIRE VOICE UNBUNDLED 1-WAY OUTGOING PBX LOUISIANA LOCAL DISCOUNT CALLING PORT	UEPXP	NA	NA	NA	NA	$14.00	NA	NA	NA	NA
2-WIRE VOICE UNBUNDLED 2-WAY PBX MISSISSIPPI LOCAL ECONOMY CALLING PORT	UEPXQ	NA	NA	NA	NA	NA	NA	NA	NA	NA
2-WIRE VOICE UNBUNDLED 2-WAY PBX MISSISSIPPI LOCAL OPTIONAL CALLING PORT	UEPXR	NA	NA	NA	NA	NA	NA	NA	NA	NA
2-WIRE VOICE UNBUNDLED 1-WAY OUTGOING PBXMEASURED PORT	UEPXS	NA	$14.00	$14.00	NA	$14.00	NA	$14.00	NA	$14.00
2-WIRE VOICE UNBUNDLED 2-WAY PBX SOUTH CAROLINA AREA PLUS CALLING PORT	UEPXT	NA	NA	NA	NA	NA	NA	NA	NA	NA
2-WIRE VOICE UNBUNDLED PBX COLLIERVILLE & MEMPHIS CALLING PORT	UEPXU	NA	NA	NA	NA	NA	NA	NA	NA	$14.00
2-WIRE VOICE UNBUNDLED 2-WAY PBX TENNESSEE REGIONSERV CALLING PORT	UEPXV	NA	NA	NA	NA	NA	NA	NA	NA	$14.00
LOCAL NUMBER PORTABILITY (REQUIRES ONE PER PORT)	LNPCP									
2-Wire Voice Grade Loop (SL1)										
RC - 2- Wire Voice Grade Loop - Statewide	UEPLX	NA	NA	NA	NA	NA	NA	$14.18	NA	NA
RC - 2- Wire Voice Grade Loop - Zone 1	UEPLX	NA	$14.90	$10.80	NA	$14.05	NA	NA	NA	$15.92
RC - 2- Wire Voice Grade Loop - Zone 2	UEPLX	NA	$18.51	$12.47	NA	$24.14	NA	NA	NA	$20.79
RC - 2- Wire Voice Grade Loop - Zone 3	UEPLX	NA	$24.25	$19.83	NA	$49.30	NA	NA	NA	$27.18
RC - 2- Wire Voice Grade Loop - Zone 4	UEPLX	NA	NA	NA	NA	NA	NA	NA	NA	NA
Combination Rates										
RC - 2-Wire Voice Grade Loop with 2-Wire Line Port, Statewide	Note 8	NA	NA	NA	NA	NA	NA	$28.18	NA	NA
RC - 2-Wire Voice Grade Loop with 2-Wire Line Port, Zone 1 (Note 6)	Note 8	NA	$28.90	$24.80	NA	$28.05	NA	NA	NA	$29.92
RC - 2-Wire Voice Grade Loop with 2-Wire Line Port, Zone 2 (Note 6)	Note 8	NA	$32.51	$26.47	NA	$38.14	NA	NA	NA	$34.79
RC - 2-Wire Voice Grade Loop with 2-Wire Line Port, Zone 3 (Note 6)	Note 8	NA	$38.25	$33.83	NA	$63.30	NA	NA	NA	$41.18
Nonrecurring Charges										
NRC - 2- wire voice grade unbundled port/loop combination - 1st, with change		NA	$41.50	$41.50	NA	$41.50	NA	$41.50	NA	$41.50
NRC - 2- wire voice grade unbundled port/loop combination - Add'l, with change		NA	$41.50	$41.50	NA	$41.50	NA	$41.50	NA	$41.50
NRC - 2- wire voice grade unbundled port/loop combination - 1st, no change		NA	$41.50	$41.50	NA	$41.50	NA	$41.50	NA	$41.50
NRC - 2- wire voice grade unbundled port/loop combination - Add'l, no change		NA	$41.50	$41.50	NA	$41.50	NA	$41.50	NA	$41.50
NRC - 2-Wire Voice Grade Loop/Line Port Combination - Subsequent		NA	$10.00	$10.00	$10.00	$10.00	NA	$10.00	NA	$10.00

BELLSOUTH/API RATES
NETWORK ELEMENTS
AND OTHER SERVICES

DESCRIPTION	USOC	AL	FL	GA	KY	LA	MS	NC	SC	TN
NRC - 2-Wire Voice Grade Loop/Line Port Combination - OSS LSR Charge, Electronic, per LSR received from the CLEC by one of the OSS interactive interfaces (Note 7)	SOMEC	NA	$2.75	$3.50	NA	$3.50	NA	$3.50	NA	$3.50
NRC - 2-Wire Voice Grade Loop/Line Port Combination - Incremental Cost - Manual Svc.Order vs. Electronic - 1st	SOMAN	NA	$21.56	$33.67	NA	$31.92	NA	$40.18	NA	$30.89
NRC - 2-Wire Voice Grade Loop/Line Port Combination - Incremental Cost - Manual Svc.Order vs. Electronic - Add'l	SOMAN	NA	$21.56	$7.88	NA	$7.32	NA	$9.45	NA	$7.03
NRC- 2 Wire Voice Grade Loop/Line Port Combination - Subsequent Database Update - Electronic		NA	TBD	TBD	NA	$2.11	NA	$1.42	NA	TBD
NRC- 2 Wire Voice Grade Loop/Line Port Combination - Subsequent Database Update - Manual Service Order		NA	TBD	TBD	NA	$5.12	NA	$10.27	NA	TBD
NRC - Electronic Service Order Disconnect		NA	$0.42	NA	NA	NA	NA	NA	NA	NA
NRC - Incremental Manual Service Order Disconnect		NA	$3.84	$20.00	NA	$20.00	NA	$20.00	NA	$20.00
COST BASED RATES (Notes 2 & 3)										
Currently Combined										
2-Wire Voice Grade Loop with 2-Wire Line Port										
2-Wire Voice Grade Line Port (Res.), per month										
2- wire voice unbundled port - residence	UEPRL	$2.20	$1.35	$1.79	$2.61	$2.55	$2.12	$2.28	$3.69	$4.54
2-wire voice unbundled port with caller ID - residence	UEPRC	$2.20	$1.35	$1.79	$2.61	$2.55	$2.12	$2.28	$3.69	$4.54
2-wire voice unbundled port outgoing only - residence	UEPRO	$2.20	$1.35	$1.79	$2.61	$2.55	$2.12	$2.28	$3.69	$4.54
2-wire voice grade unbundled Alabama extended local dialing parity port with caller ID	UEPAR	$2.20	NA	NA	NA	NA	NA	NA	NA	NA
2-wire voice grade unbundled Kentucky extended local dialing parity port with caller ID	UEPRM	NA	NA	NA	$2.61	NA	NA	NA	NA	NA
2-wire voice grade unbundled Louisiana extended local dialing parity port with caller ID	UEPAS	NA	NA	NA	NA	$2.55	NA	NA	NA	NA
2-wire voice grade unbundled Mississippi extended local dialing parity port with caller ID	UEPAT	NA	NA	NA	NA	NA	$2.12	NA	NA	NA
2-wire voice grade unbundled South Carolina extended local dialing parity port with caller ID	UEPAU	NA	NA	NA	NA	NA	NA	NA	$3.69	NA
2-wire voice grade unbundled Tennessee extended local dialing parity port with caller ID	UEPAQ	NA	NA	NA	NA	NA	NA	NA	NA	$4.54
2-wire voice unbundled Florida area calling with caller ID - residence	UEPAF	NA	$1.35	NA	NA	NA	NA	NA	NA	NA
2-wire voice unbundled Louisiana Area Plus with caller ID - residence (RUL)	UEPAG	NA	NA	NA	NA	$2.55	NA	NA	NA	NA
2-wire voice unbundled Louisiana Area Plus with caller ID - residence (AC7)	UEPAH	NA	NA	NA	NA	$2.55	NA	NA	NA	NA
2-wire voice unbundled South Carolina Area Calling port with Caller ID - residence (LW8)	UEPAJ	NA	NA	NA	NA	NA	NA	NA	$3.69	NA
2-wire voice unbundled Tennessee Area Calling port with Caller ID - residence (F2R)	UEPAK	NA	NA	NA	NA	NA	NA	NA	NA	$4.54
2-wire voice unbundled Tennessee Area Calling port with Caller ID - residence (TACER)	UEPAL	NA	NA	NA	NA	NA	NA	NA	NA	$4.54
2-wire voice unbundled Tennessee Area Calling port with Caller ID - residence (TACSR)	UEPAM	NA	NA	NA	NA	NA	NA	NA	NA	$4.54
2-wire voice unbundled Tennessee Area Calling port with Caller ID - residence (1MF2X)	UEPAN	NA	NA	NA	NA	NA	NA	NA	NA	$4.54
2-wire voice unbundled Tennessee Area Calling port with Caller ID - residence (2MR)	UEPAO	NA	NA	NA	NA	NA	NA	NA	NA	$4.54
2-wire voice unbundled res, low usage line port with Caller ID (LUM)	UEPAP	$2.20	$1.35	$1.79	$2.61	$2.55	$2.12	$2.28	$3.69	$4.54
2-Wire Voice Grade Line Port (Bus.), per month										
2-wire voice unbundled port without Caller ID	UEPBL	$2.20	$1.35	$1.79	$2.61	$2.55	$2.12	$2.28	$3.69	$4.54
2-wire voice unbundled port with unbundled port with Caller+E484 ID	UEPBC	$2.20	$1.35	$1.79	$2.61	$2.55	$2.12	$2.28	$3.69	$4.54
2-wire voice unbundled outgoing only port	UEPBO	$2.20	$1.35	$1.79	$2.61	$2.55	$2.12	$2.28	$3.69	$4.54
2-wire voice grade unbundled Alabama extended local dialing parity port with caller ID	UEPAW	$2.20	NA	NA	NA	NA	NA	NA	NA	NA

BELLSOUTH/API RATES
NETWORK ELEMENTS
AND OTHER SERVICES

DESCRIPTION	USOC	AL	FL	GA	KY	LA	MS	NC	SC	TN
2-wire voice grade unbundled Kentucky extended local dialing parity port with caller ID	UEPBM	NA	NA	NA	$2.61	NA	NA	NA	NA	NA
2-wire voice grade unbundled Louisiana extended local dialing parity port with caller ID	UEPAX	NA	NA	NA	NA	$2.55	NA	NA	NA	NA
2-wire voice grade unbundled Mississippi extended local dialing parity port with caller ID	UEPAY	NA	NA	NA	NA	NA	$2.12	NA	NA	NA
2-wire voice grade unbundled South Carolina extended local dialing parity port with caller ID	UEPAZ	NA	NA	NA	NA	NA	NA	NA	$3.69	NA
2-wire voice grade unbundled Tennessee extended local dialing parity port with caller ID	UEPAV	NA	NA	NA	NA	NA	NA	NA	NA	$4.54
2-wire voice unbundled incoming only port with Caller ID	UEPB1	$2.20	$1.35	$1.79	$2.61	$2.55	$2.12	$2.28	$3.69	$4.54
2-wire voice unbundled LA Bus Area Calling Port with Caller ID (BUC)	UEPAA	NA	NA	NA	NA	$2.55	NA	NA	NA	NA
2-wire voice unbundled SC Bus Area Calling Port with Caller ID (LMB)	UEPAB	NA	NA	NA	NA	NA	NA	NA	$3.69	NA
2-wire voice unbundled TN Bus 2-Way Area Calling Port Economy Option (TACC1)	UEPAC	NA	NA	NA	NA	NA	NA	NA	NA	$4.54
2-wire voice unbundled TN Bus 2-Way Area Calling Port Standard Option (TACC2)	UEPAD	NA	NA	NA	NA	NA	NA	NA	NA	$4.54
2-wire voice unbundled TN Bus 2-WAY Collierville and Memphis Local Calling Port (B2F)	UEPAE	NA	NA	NA	NA	NA	NA	NA	NA	$4.54
2-Wire Voice Grade Loop (SL1)										
RC - 2- Wire Voice Grade Loop - Statewide	UEPLX	NA	NA	NA	NA	NA	NA	$14.18	NA	NA
RC - 2- Wire Voice Grade Loop - Zone 1	UEPLX	$14.35	$14.90	$10.80	$14.79	$14.05	$14.59	NA	$17.02	$12.48
RC - 2- Wire Voice Grade Loop - Zone 2	UEPLX	$23.31	$18.51	$12.47	$27.68	$24.14	$19.33	NA	$25.66	$14.42
RC - 2- Wire Voice Grade Loop - Zone 3	UEPLX	$42.24	$24.25	$19.83	$47.78	$49.30	$27.63	NA	$33.99	$21.77
RC - 2- Wire Voice Grade Loop - Zone 4	UEPLX	NA	NA	NA	NA	NA	$36.47	NA	NA	NA
Combination Rates										
RC - 2-Wire Voice Grade Loop with 2-Wire Line Port, Statewide	Note 8	NA	NA	NA	NA	NA	NA	$16.46	NA	NA
RC - 2-Wire Voice Grade Loop with 2-Wire Line Port, Zone 1 (Note 6)	Note 8	$16.55	$16.25	$12.59	$17.40	$16.60	$16.71	NA	$20.71	$17.02
RC - 2-Wire Voice Grade Loop with 2-Wire Line Port, Zone 2 (Note 6)	Note 8	$25.51	$19.86	$14.26	$30.29	$26.69	$21.45	NA	$29.35	$18.96
RC - 2-Wire Voice Grade Loop with 2-Wire Line Port, Zone 3 (Note 6)	Note 8	$44.44	$25.60	$21.62	$50.39	$51.85	$29.75	NA	$37.68	$26.31
RC - 2-Wire Voice Grade Loop with 2-Wire Line Port, Zone 4 (Note 6)	Note 8	NA	NA	NA	NA	NA	$38.59	NA	NA	NA
Nonrecurring Charges										
NRC - 2-Wire Voice Grade Loop/Line Port Combination - 1st, Switch as is	USAC2	$2.80	$0.1964	$2.01	$10.00	$3.80	$5.20	$2.77	$1.59	$1.03
NRC - 2-Wire Voice Grade Loop/Line Port Combination - Add'l, Switch as is	USAC2	$0.41	$0.1964	$0.3108	$10.00	$0.29	$0.41	$0.40	$0.40	$0.2886
NRC - 2-Wire Voice Grade Loop/Line Port Combination - 1st, Switch with change	USACC	$2.80	$0.1964	$2.01	$10.00	$3.80	$5.20	$2.77	$1.59	$1.03
NRC - 2-Wire Voice Grade Loop/Line Port Combination - Add'l, Switch with change	USACC	$0.41	$0.1964	$0.3108	$10.00	$0.29	$0.41	$0.40	$0.40	$0.2886
NRC - 2-Wire Voice Grade Loop/Line Port Combination - Subsequent	USAS2	$10.00	$10.00	$10.00	$10.00	$10.00	$10.00	$10.00	$10.00	$10.00
NRC - 2-Wire Voice Grade Loop/Line Port Combination - OSS LSR Charge, Electronic, per LSR received from the CLEC by one of the OSS interactive interfaces (Note 7)	SOMEC	$3.50	$2.75	$3.50	$3.50	$3.50	$3.50	$3.50	$3.50	$3.50
NRC - 2-Wire Voice Grade Loop/Line Port Combination - Incremental Cost - Manual Svc.Order vs. Electronic - 1st	SOMAN	$40.71	$21.56	$33.67	$19.99	$31.92	$43.52	$40.18	$43.19	$30.89
NRC - 2-Wire Voice Grade Loop/Line Port Combination - Incremental Cost - Manual Svc.Order vs. Electronic - Add'l	SOMAN	$9.58	$21.56	$7.88	$19.99	$7.32	$9.99	$9.45	$9.91	$7.03
NRC- 2 Wire Voice Grade Loop/Line Port Combination - Subsequent Database Update - Electronic		$1.44	TBD	TBD	TBD	$2.11	$2.87	$1.42	$0.71	$0.76
NRC- 2 Wire Voice Grade Loop/Line Port Combination - Subsequent Database Update - Manual Service Order		$8.25	TBD	TBD	TBD	$5.12	$6.88	$10.27	$8.91	$7.97
NRC - Electronic Service Order Disconnect		NA	$0.42	NA	NA	NA	NA	NA	NA	NA
NRC - Incremental Manual Service Order Disconnect		$20.00	$3.84	$20.00	$20.00	$20.00	$20.00	$20.00	$20.00	$20.00
NRCs for New (not Currently Combined) as ordered in Georgia:										
NRC - 2-Wire Voice Grade Loop with 2-Wire Line Port - New - 1st	UEPRL	NA	NA	$22.14	NA	NA	NA	NA	NA	NA
NRC - 2-Wire Voice Grade Loop with 2-Wire Line Port - New - Add'l	UEPRL	NA	NA	$15.25	NA	NA	NA	NA	NA	NA
NRC - 2-Wire Voice Grade Loop with 2-Wire Line Port - New - 1st	UEPRC	NA	NA	$22.14	NA	NA	NA	NA	NA	NA
NRC - 2-Wire Voice Grade Loop with 2-Wire Line Port - New - Add'l	UEPRC	NA	NA	$15.25	NA	NA	NA	NA	NA	NA
NRC - 2-Wire Voice Grade Loop with 2-Wire Line Port - New - 1st	UEPRO	NA	NA	$22.14	NA	NA	NA	NA	NA	NA
NRC - 2-Wire Voice Grade Loop with 2-Wire Line Port - New - Add'l	UEPRO	NA	NA	$15.25	NA	NA	NA	NA	NA	NA
NRC - 2-Wire Voice Grade Loop with 2-Wire Line Port - New - 1st	UEPAP	NA	NA	$22.14	NA	NA	NA	NA	NA	NA
NRC - 2-Wire Voice Grade Loop with 2-Wire Line Port - New - Add'l	UEPAP	NA	NA	$15.25	NA	NA	NA	NA	NA	NA
NRC - 2-Wire Voice Grade Loop with 2-Wire Line Port - New - 1st	UEPBL	NA	NA	$22.14	NA	NA	NA	NA	NA	NA

BELLSOUTH/API RATES
NETWORK ELEMENTS
AND OTHER SERVICES

DESCRIPTION	USOC	AL	FL	GA	KY	LA	MS	NC	SC	TN
NRC - 2-Wire Voice Grade Loop with 2-Wire Line Port - New - Add'l	UEPBL	NA	NA	$15.25	NA	NA	NA	NA	NA	NA
NRC - 2-Wire Voice Grade Loop with 2-Wire Line Port - New - 1st	UEPBC	NA	NA	$22.14	NA	NA	NA	NA	NA	NA
NRC - 2-Wire Voice Grade Loop with 2-Wire Line Port - New - Add'l	UEPBC	NA	NA	$15.25	NA	NA	NA	NA	NA	NA
NRC - 2-Wire Voice Grade Loop with 2-Wire Line Port - New - 1st	UEPBO	NA	NA	$22.14	NA	NA	NA	NA	NA	NA
NRC - 2-Wire Voice Grade Loop with 2-Wire Line Port - New - Add'l	UEPBO	NA	NA	$15.25	NA	NA	NA	NA	NA	NA
NRC - 2-Wire Voice Grade Loop with 2-Wire Line Port - New - 1st	UEPB1	NA	NA	$22.14	NA	NA	NA	NA	NA	NA
NRC - 2-Wire Voice Grade Loop with 2-Wire Line Port - New - Add'l	UEPB1	NA	NA	$15.25	NA	NA	NA	NA	NA	NA
NRC - 2-Wire Voice Grade Loop/Line Port Combination - Subsequent	USAS2	NA	NA	$10.00	NA	NA	NA	NA	NA	NA
NRC - 2-Wire Voice Grade Loop with 2-Wire Line Port - New - Disconnect - 1st		NA	NA	$8.45	NA	NA	NA	NA	NA	NA
NRC - 2-Wire Voice Grade Loop with 2-Wire Line Port - New - Disconnect - Add'l		NA	NA	$3.91	NA	NA	NA	NA	NA	NA
NRC - 2-Wire Voice Grade Loop/Line Port Combination - OSS LSR Charge, Electronic, per LSR received from the CLEC by one of the OSS interactive interfaces (Note 7)	SOMEC	NA	NA	$3.50	NA	NA	NA	NA	NA	NA
NRC - 2-Wire Voice Grade Loop with 2-Wire Line Port - Incremental Cost Manual vs. Electronic - New - 1st		NA	NA	$37.06	NA	NA	NA	NA	NA	NA
NRC - 2-Wire Voice Grade Loop with 2-Wire Line Port - Incremental Cost Manual vs. Electronic - New - Add'l		NA	NA	$8.19	NA	NA	NA	NA	NA	NA
NRC- 2 Wire Voice Grade Loop/Line Port Combination - Subsequent Database Update - Electronic		NA	NA	TBD	NA	NA	NA	NA	NA	NA
NRC- 2 Wire Voice Grade Loop/Line Port Combination - Subsequent Database Update - Manual Service Order		NA	NA	TBD	NA	NA	NA	NA	NA	NA
NRC - 2-Wire Voice Grade Loop with 2-Wire Line Port - Incremental Cost Manual vs. Electronic - New - Disconnect		NA	NA	$11.17	NA	NA	NA	NA	NA	NA
2- Wire Voice Grade Loop - Bus Only with 2 -Wire DID Trunk Port										
2 - Wire Line Port - DID Trunk Port, per month	UEPD1	TBD	$9.36	$11.35	$10.84	$13.12	$14.63	$12.12	TBD	$8.78
2-Wire Voice Grade Loop (SL2)										
RC - 2- Wire Voice Grade Loop - Statewide	UECD1	NA	NA	NA	NA	NA	NA	$11.76	NA	NA
RC - 2- Wire Voice Grade Loop - Zone 1	UECD1	$17.95	$18.48	$16.84	$17.78	$17.65	$18.35	NA	$21.57	$9.60
RC - 2- Wire Voice Grade Loop - Zone 2	UECD1	$29.16	$22.43	$19.45	$23.96	$30.32	$24.33	NA	$32.53	$11.09
RC - 2- Wire Voice Grade Loop - Zone 3	UECD1	$52.84	$27.87	$30.92	$34.96	$61.93	$34.77	NA	$43.08	$16.74
RC - 2- Wire Voice Grade Loop - Zone 4	UECD1	NA	NA	NA	NA	NA	$45.88	NA	NA	NA
Combination Rates										
RC - 2-Wire Voice Grade Loop with 2-Wire DID Port, Statewide	Note 8	NA	NA	NA	NA	NA	NA	$23.79	NA	NA
RC - 2-Wire Voice Grade Loop with 2-Wire DID Port, Zone 1 (Note 6)	Note 8	28.72	$27.84	$28.19	28.72	$30.77	28.72	NA	28.72	$18.38
RC - 2-Wire Voice Grade Loop with 2-Wire DID Port, Zone 2 (Note 6)	Note 8	34.91	$31.79	$30.80	34.91	$43.44	34.91	NA	34.91	$19.87
RC - 2-Wire Voice Grade Loop with 2-Wire DID Port, Zone 3 (Note 6)	Note 8	45.9	$37.23	$42.27	45.9	$75.05	45.9	NA	45.9	$25.52
RC - 2-Wire Voice Grade Loop with 2-Wire DID Port, Zone4 (Note 6)	Note 8	NA	NA	NA	NA	NA	TBD	NA	NA	NA
NRC- 2- Wire Voice Grade Loop with 2- Wire DID Port - Conversion - Switch As Is - 1st port	USAC1	$14.62	$14.62	$166.08	TBD	$14.60	$14.60	$13.26	$14.62	$8.76
NRC- 2- Wire Voice Grade Loop with 2- Wire DID Port - Conversion - Switch As Is Each Addl Port	USAC1	$3.73	$3.73	$140.01	TBD	$3.72	$3.72	$8.39	$3.73	$5.75
NRC- 2- Wire Voice Grade Loop with 2- Wire DID Port - Conversion with changes - 1st port	USA1C	$14.62	$14.62	$166.08	TBD	$14.60	$14.60	$13.26	$14.62	$8.76
NRC- 2- Wire Voice Grade Loop with 2- Wire DID Port - Conversion with changes - Each Addl port	USA1C	$3.73	$3.73	$140.01	TBD	$3.72	$3.72	$8.39	$3.73	$5.75
NRC - 2-Wire DID Subsequent Activity - Per Svc Order - Add Trunks, Per Trunk	USAS1	$53.57	$53.57	NA	NA	$53.50	$53.50	NA	$53.57	NA
NRC - 2-Wire Voice Grade Loop/Line Port Combination - OSS LSR Charge, Electronic, per LSR received from the CLEC by one of the OSS interactive interfaces (Note 7)	SOMEC	$3.50	$2.75	$3.50	$3.50	$3.50	$3.50	$3.50	$3.50	$3.50
NRC- 2- Wire Voice Grade Loop with 2- Wire DID Port - Incremental Cost- Manual Service Order - 1st	SOMAN	$19.99	$21.56	$37.88	$19.99	$19.99	$19.99	$53.89	$19.99	$41.43
NRC- 2- Wire Voice Grade Loop with 2- Wire DID Port - Incremental Cost- Manual Service Order - Addl	SOMAN	$19.99	$21.56	$16.84	$19.99	$19.99	$19.99	$11.34	$19.99	$9.80

BELLSOUTH/API RATES
NETWORK ELEMENTS
AND OTHER SERVICES

DESCRIPTION	USOC	AL	FL	GA	KY	LA	MS	NC	SC	TN
NRC - Electronic Service Order Disconnect		$0.42	$0.42	$0.42	$0.42	$0.42	$0.42	$0.42	$0.42	$0.42
NRC - Incremental Manual Service Order Disconnect		$20.00	$3.84	$20.00	$20.00	$20.00	$20.00	$20.00	$20.00	$20.00
Telephone Number/Trunk Group Establishment										
DID Trunk Termination (one required per port)	NDT	$0.00	$0.00	$0.00	$0.00	$0.00	$0.00	$0.00	$0.00	$0.00
DID Numbers, Establish Trunk Group and Provide First Group of 20 DID Numbers (FL, GA, NC, & SC only)	NDZ	$0.00	$0.00	$0.00	$0.00	$0.00	$0.00	$0.00	$0.00	$0.00
DID Numbers, Establish Trunk Group and Provide First Group of 20 DID Numbers (AL, KY, LA, MS, & TN). In addition, Provides Additional DID Numbers for each Group of 20 DID Numbers (Valid in All States)	ND4	$0.00	$0.00	$0.00	$0.00	$0.00	$0.00	$0.00	$0.00	$0.00
DID Numbers, non-consective	ND5	$0.00	$0.00	$0.00	$0.00	$0.00	$0.00	$0.00	$0.00	$0.00
2-Wire ISDN Digital Grade Loop with 2-wire ISDN Digital Port										
2-wire ISDN Digital Port per month	UEPPB	$16.42	$8.51	$13.47	$12.99	$11.42	$51.91	$24.37	$33.74	$18.21
2-Wire ISDN Digital Grade Loop										
RC - 2-Wire ISDN Digital Grade Loop - Statewide	USL2X	NA	NA	NA	NA	NA	NA	$19.08	NA	NA
RC - 2-Wire ISDN Digital Grade Loop - Zone 1	USL2X	$23.23	$22.48	$21.89	$22.41	$28.87	$21.86	NA	$26.68	$16.20
RC - 2-Wire ISDN Digital Grade Loop - Zone 2	USL2X	$37.74	$27.90	$25.27	$31.10	$37.63	$28.97	NA	$40.24	$18.71
RC - 2-Wire ISDN Digital Grade Loop - Zone 3	USL2X	$68.38	$30.78	$40.17	$42.36	$48.42	$41.40	NA	$53.29	$28.25
RC - 2-Wire ISDN Digital Grade Loop - Zone 4	USL2X	NA	NA	NA	NA	NA	$54.64	NA	NA	NA
Combination Rates										
RC - 2-Wire ISDN Digital Grade Loop with 2-wire ISDN Digital Port - Statewide	Note 8	NA	NA	NA	NA	NA	NA	$43.45	NA	NA
RC - 2-Wire ISDN Digital Grade Loop with 2-wire ISDN Digital Port - Zone 1	Note 8	$39.65	$30.99	$35.36	$34.40	$34.84	$73.77	NA	$60.42	$34.41
RC - 2-Wire ISDN Digital Grade Loop with 2-wire ISDN Digital Port - Zone 2	Note 8	$54.16	$36.41	$38.74	$44.10	$43.20	$80.78	NA	$73.98	$36.92
RC - 2-Wire ISDN Digital Grade Loop with 2-wire ISDN Digital Port - Zone 3	Note 8	$84.80	$39.30	$53.64	$55.35	$59.69	$93.31	NA	$87.03	$46.46
RC - 2-Wire ISDN Digital Grade Loop with 2-wire ISDN Digital Port - Zone 4	Note 8	NA	NA	NA	NA	NA	$106.55	NA	NA	NA
NRC - 2-Wire ISDN Digital Grade Loop/2-wire ISDN Digital Port - 1st conversion	USACB	$79.12	$86.79	$239.95	$79.12	$79.01	$79.12	$174.35	$79.12	$117.23
NRC - 2-Wire ISDN Digital Grade Loop/2-wire ISDN Digital Port - Add'l conversion	USACB	$54.04	$54.04	$156.92	$54.04	$53.97	$54.04	$174.35	$54.04	$117.23
NRC - 2-Wire ISDN Digital Grade Loop/2-wire ISDN Digital Port - Non Feature Subsequent Activity	USASB	$53.50	$53.50	$53.50	$53.50	$53.50	$53.50	$53.50	$53.50	$212.88
NRC - 2-Wire Voice Grade Loop/Line Port Combination - OSS LSR Charge, Electronic, per LSR received from the CLEC by one of the OSS interactive interfaces (Note 7)	SOMEC	$3.50	$2.75	$3.50	$3.50	$3.50	$3.50	$3.50	$3.50	$3.50
NRC - 2-Wire ISDN Digital Grade Loop/2-wire ISDN Digital Port - Incremental Cost-Manual Service Order - 1st	SOMAN	$19.99	$21.56	$19.99	$19.99	$19.99	$19.99	$19.99	$19.99	$19.99
NRC - 2-Wire ISDN Digital Grade Loop/2-wire ISDN Digital Port - Incremental Cost-Manual Service Order - Addl	SOMAN	$19.99	$21.56	$19.99	$19.99	$19.99	$19.99	$19.99	$19.99	$19.99
NRC - Electronic Service Order Disconnect		$0.42	$0.42	$0.42	$0.42	$0.42	$0.42	$0.42	$0.42	$0.42
NRC - Incremental Manual Service Order Disconnect		$20.00	$3.84	$20.00	$20.00	$20.00	$20.00	$20.00	$20.00	$20.00
4 - Wire DS1 Digital Loop with 4 - Wire ISDN DS1 Digital Trunk Port										
4 - Wire ISDN DS1 Digital Trunk Port	UEPPP	$186.02	$95.39	$163.16	$113.21	$107.55	$213.21	$179.01	$214.79	$78.40
4 - Wire DS1 Digital Loop										
RC - 4- Wire DS1 Digital Loop- Statewide	USL4P	NA	NA	NA	NA	NA	NA	$62.71	NA	NA
RC - 4- Wire DS1 Digital Loop- Zone 1	USL4P	$51.74	$92.48	$55.53	$106.04	$100.70	$50.99	NA	$59.61	$57.73
RC - 4- Wire DS1 Digital Loop- Zone 2	USL4P	$84.05	$119.68	$3.21	$135.15	$129.12	$67.58	NA	$89.90	$75.40
RC - 4- Wire DS1 Digital Loop- Zone 3	USL4P	$152.29	$194.70	$101.93	$186.26	$344.16	$96.58	NA	$119.06	$98.59
RC - 4-Wire DS1 Digital Loop - Zone 4	USL4P	NA	NA	NA	NA	NA	$127.47	NA	NA	NA
Combination Rates										
RC - 4-Wire DS1 Digital Loop with 4-wire ISDN DS1 Digital Port - Statewide	Note 8	NA	NA	NA	NA	NA	NA	$241.72	NA	NA
RC - 4-Wire DS1 Digital Loop with 4-wire ISDN DS1 Digital Port - Zone 1	Note 8	$237.76	$187.87	$218.69	$219.25	$208.25	$264.20	NA	$274.40	$136.13
RC - 4-Wire DS1 Digital Loop with 4-wire ISDN DS1 Digital Port - Zone 2	Note 8	$270.07	$215.07	$227.29	$248.36	$236.67	$280.79	NA	$304.69	$153.80
RC - 4-Wire DS1 Digital Loop with 4-wire ISDN DS1 Digital Port - Zone 3	Note 8	$338.31	$290.08	$265.09	$299.47	$451.57	$309.79	NA	$333.85	$176.99
RC - 4-Wire DS1 Digital Loop with 4-wire ISDN DS1 Digital Port - Zone 4	Note 8	NA	NA	NA	NA	NA	$340.68	NA	NA	NA
Local Number Portability										
Local Number Portability (1 per port)	LNPCN	$1.75	$1.75	$1.75	$1.75	$1.75	$1.75	$1.75	$1.75	$1.75

BELLSOUTH/API RATES
NETWORK ELEMENTS
AND OTHER SERVICES

DESCRIPTION	USOC	AL	FL	GA	KY	LA	MS	NC	SC	TN
Interface (Provsioning Only)										
Voice/Data	PR71V	$0.00	$0.00	$0.00	$0.00	$0.00	$0.00	$0.00	$0.00	$0.00
Digital Data	PR71D	$0.00	$0.00	$0.00	$0.00	$0.00	$0.00	$0.00	$0.00	$0.00
Inward Data	PR71E	$0.00	$0.00	$0.00	$0.00	$0.00	$0.00	$0.00	$0.00	$0.00
Non-Recurring Charges										
NRC - 4-Wire DS1 Digital Loop with 4-wire ISDN DS1 Digital Port Combination - 1st conversion	USACP	$240.30	$247.97	$269.96	$240.30	$239.95	$240.30	$481.51	$240.30	$328.53
NRC - 4-Wire DS1 Digital Loop with 4-wire ISDN DS1 Digital Port Combination - Add'l conversion	USACP	$157.17	$157.17	$269.96	$157.17	$156.94	$157.17	$481.51	$157.17	$328.53
NRC -4 - Wire DS1 Digital Loop with 4 - Wire ISDN DS1 Digital Trunk Port - Subsequent Channel Activation - Per Channel	USASP	$29.06	$29.06	$28.71	$29.06	$29.01	$29.06	$36.92	$29.06	$28.39
NRC - 4-Wire DS1 Digital Loop with 4-wire ISDN DS1 Digital Port Combination - Subsequent Inward/2-way Telephone Numbers	PR7TG	$0.98	$0.9804	$0.9686	$0.98	$0.98	$0.98	$1.17	$0.98	$0.9353
NRC - 4-Wire DS1 Digital Loop with 4-wire ISDN DS1 Digital Port Combination - Subsequent Outward Telephone numbers	PR7TP	$23.02	$23.02	$22.75	$23.02	$22.99	$23.02	$28.17	$23.02	$22.36
NRC - 4-Wire DS1 Digital Loop with 4-wire ISDN DS1 Digital Port Combination - Subsequent Inward Telephone Numbers	PR7ZT	$46.05	$46.05	$45.49	$46.05	$45.98	$46.05	$56.33	$46.05	$44.71
NRC - 4-Wire DS1 Digital Loop with 4-wire ISDN DS1 Digital Port Combination - Subsequent Service Order Per Order	USASP	$147.47	$147.47	$147.47	$147.47	$147.47	$147.47	$255.25	$147.47	$189.76
NRC - 2-Wire Voice Grade Loop/Line Port Combination - OSS LSR Charge, Electronic, per LSR received from the CLEC by one of the OSS interactive interfaces (Note 7)	SOMEC	$3.50	$2.75	$3.50	$3.50	$3.50	$3.50	$3.50	$3.50	$3.50
NRC - 4-Wire DS1 Digital Loop with 4-wire ISDN Digital Port - Incremental Cost-Manual Service Order - 1st	SOMAN	$19.99	$21.56	$19.99	$19.99	$19.99	$19.99	$19.99	$19.99	$19.99
NRC - 4-Wire ISDN Digital Loop with 4-wire ISDN Digital Port - Incremental Cost-Manual Service Order - Addl	SOMAN	$19.99	$21.56	$19.99	$19.99	$19.99	$19.99	$19.99	$19.99	$19.99
NRC - Electronic Service Order Disconnect		$0.42	$0.42	$0.42	$0.42	$0.42	$0.42	$0.42	$0.42	$0.42
NRC - Incremental Manual Service Order Disconnect		$20.00	$3.84	$20.00	$20.00	$20.00	$20.00	$20.00	$20.00	$20.00
4 - Wire DS1 Digital Loop with 4 - Wire DDITS Trunk Port										
4 - Wire DDITS Digital Trunk Port (Formerly DID Trunk Port)	UDD1T	$130.23	$63.31	$120.80	$83.28	$149.27	$146.46	$123.65	TBD	$120.00
4 - Wire DS1 Digital Loop	USLDC									
4 - Wire DS1 Digital Loop - Statewide	USLDC	NA	NA		NA	NA	NA	$62.71	NA	NA
4 - Wire DS1 Digital Loop - Zone 1	USLDC	$51.74	$64.69	$55.53	$106.04	$56.32	$50.99	NA	$59.61	$57.73
4 - Wire DS1 Digital Loop - Zone 2	USLDC	$84.05	$94.71	$64.13	$135.15	$96.73	$67.58	NA	$89.90	$75.40
4 - Wire DS1 Digital Loop - Zone 3	USLDC	$152.29	$208.93	$101.93	$186.26	$197.57	$96.58	NA	$119.06	$98.59
4 - Wire DS1 Digital Loop - Zone 4	USLDC	NA	NA	NA	NA	NA	$127.47	NA	NA	NA
Combination Rates										
4 - Wire DS1 Digital Loop with 4 - Wire DDITS Trunk Port - Statewide	Note 8	NA	NA	NA	NA	NA	NA	$186.36	NA	NA
4 - Wire DS1 Digital Loop with 4 - Wire DDITS Trunk Port - Zone 1	Note 8	$181.97	$128.00	$176.33	$189.32	$205.59	$197.45	NA	TBD	$93.28
4 - Wire DS1 Digital Loop with 4 - Wire DDITS Trunk Port - Zone 2	Note 8	$214.28	$158.02	$184.93	$218.43	$246.00	$214.04	NA	TBD	$110.95
4 - Wire DS1 Digital Loop with 4 - Wire DDITS Trunk Port - Zone 3	Note 8	$282.52	$272.24	$222.73	$269.54	$346.84	$243.04	NA	TBD	$134.14
4 - Wire DS1 Digital Loop with 4 - Wire DDITS Trunk Port - Zone 4	Note 8	NA	NA	NA	NA	NA	$273.93	NA	NA	NA
Local number Portability per DSO Activated	LNPCP	$3.15	$3.15	$3.15	$3.15	$3.15	$3.15	$3.15	$3.15	$3.15
Central Office Terminating Point	CTG	$0.00	$0.00	$0.00	$0.00	$0.00	$0.00	$0.00	$0.00	$0.00
Telephone Number / Trunk Group establishment										
Telephone Number for 2-Way Trunk Group	UDTGX	$0.00	$0.00	$0.00	$0.00	$0.00	$0.00	$0.00	$0.00	$0.00
Telephone Number for 1-Way Outward Trunk Group	UDTGY	$0.00	$0.00	$0.00	$0.00	$0.00	$0.00	$0.00	$0.00	$0.00
Telephone Number for 1-Way Inward Trunk Group Without DID	UDTGZ	$0.00	$0.00	$0.00	$0.00	$0.00	$0.00	$0.00	$0.00	$0.00
DID Numbers, Establish Trunk Group and Provide First Group of 20 DID Numbers (FL, GA, NC, & SC only)	NDZ	$0.00	$0.00	$0.00	$0.00	$0.00	$0.00	$0.00	$0.00	$0.00
DID Numbers, Establish Trunk Group and Provide First Group of 20 DID Numbers (AL, KY, LA, MS, & TN). In addition, Provides Additional DID Numbers for each Group of 20 DID Numbers (Valid in All States)	ND4	$0.00	$0.00	$0.00	$0.00	$0.00	$0.00	$0.00	$0.00	$0.00
DID Numbers, Non- consecutive DID Numbers , Per Number	ND5	$0.00	$0.00	$0.00	$0.00	$0.00	$0.00	$0.00	$0.00	$0.00
Interoffice Channel Mileage - (Dedicated DS1) FX/FCO for 4 - Wire DS1 Digital Loop with 4 - Wire DDITS Trunk Port										
Fixed cost 0-8 miles (Facilities Termination)	1LNO1	$79.69	$92.62	$63.39	$55.05	$93.40	$74.40	$71.29	$94.98	$75.83

BELLSOUTH/API RATES
NETWORK ELEMENTS
AND OTHER SERVICES

DESCRIPTION	USOC	AL	FL	GA	KY	LA	MS	NC	SC	TN
Additional costs per mile 0-8 miles	1LNOA	$0.6920	$0.2000	$0.3068	$0.4500	$0.7831	$0.6598	$0.0783	$0.7598	$0.3525
Fixed cost 9-25 miles (Facilities Termination)	1LN02	$0.00	$0.00	$0.00	$0.00	$0.00	$0.00	$0.00	$0.00	$0.00
additional costs per mile 9-25 miles	1LNOB	$0.6920	$0.2000	$0.3068	$0.4500	$0.7831	$0.6598	$0.0783	$0.7598	$0.3525
Fixed cost 25 + miles (Facilities Termination)	1LNO3	$0.00	$0.00	$0.00	$0.00	$0.00	$0.00	$0.00	$0.00	$0.00
Additional costs 25 + miles	1LNOC	$0.6920	$0.2000	$0.3068	$0.4500	$0.7831	$0.6598	$0.0783	$0.7598	$0.3525
Enhanced Performance Charges										
Enhanced Performance Charges - as negotiated in contract	UDTPC	TBN	TBN	TBN	TBN	TBN	TBN	TBN	TBN	TBN
Non-recurring Charges										
NRC - 4-Wire DS1 Digital Loop with 4-Wire DDITS Trunk Port Combination - OSS LSR Charge, Electronic, per LSR received from the CLEC by one of the OSS interactive interfaces (Note 7)	SOMEC	$3.50	$2.75	$3.50	$3.50	$3.50	$3.50	$3.50	$3.50	$3.50
NRC- 4-Wire DS1 Digital Loop with 4-Wire DDITS Trunk Port - Incremental Cost-Manual Service Order - 1st	SOMAN	$19.99	$21.56	$37.88	$19.99	$19.99	$19.99	$19.99	$19.99	$19.99
NRC- 4-Wire DS1 Digital Loop with 4-Wire DDITS Trunk Port - Incremental Cost-Manual Service Order - Add'l	SOMAN	$19.99	$21.56	$16.84	$19.99	$19.99	$19.99	$19.99	$19.99	$19.99
NRC - Electronic Service Order Disconnect		TBD	$0.42	TBD	TBD	TBD	TBD	TBD	TBD	TBD
NRC - Incremental Manual Service Order Disconnect		$20.00	$3.84	$20.00	$20.00	$20.00	$20.00	$20.00	$20.00	$20.00
NRC -4 - Wire DS1 Digital Loop with 4 - Wire DDITS Trunk Port -Conversion - Switch as is - 1st	USAC4	TBD	$268.82	$269.96	$261.15	$266.76	TBD	$490.38	TBD	$312.91
NRC -4 - Wire DS1 Digital Loop with 4 - Wire DDITS Trunk Port - Conversion - Switch as is - Additional	USAC4	TBD	$134.07	$269.96	$134.08	$123.16	TBD	$490.38	TBD	$312.91
NRC -4 - Wire DS1 Digital Loop with 4 - Wire DDITS Trunk Port - Conversion with DS1 changes - 1st	USAWA	TBD	$268.82	$269.96	$261.15	$266.76	TBD	$490.38	TBD	$312.91
NRC -4 - Wire DS1 Digital Loop with 4 - Wire DDITS Trunk Port - Conversion with DS1 Changes - Additional	USAWA	TBD	$134.07	$269.96	$134.08	$123.16	TBD	$490.38	TBD	$312.91
NRC -4 - Wire DS1 Digital Loop with 4 - Wire DDITS Trunk Port - Conversion with Change - Trunks - 1st	USAWB	TBD	$268.82	$269.96	$261.15	$266.76	TBD	$490.38	TBD	$312.91
NRC -4 - Wire DS1 Digital Loop with 4 - Wire DDITS Trunk Port - Conversion with Change - Trunks - Additional	USAWB	TBD	$134.07	$269.96	$134.08	$123.16	TBD	$490.38	TBD	$312.91
NRC -4 - Wire DS1 Digital Loop with 4 - Wire DDITS Digital Trunk Port - Subsequent Service Activity Per Service Order	USAS4	TBD	$54.00	$147.47	TBD	$68.57	TBD	$127.63	TBD	$94.88
NRC -4 - Wire DS1 Digital Loop with 4 - Wire DDITS Trunk Port - New - 1st	UDDIT	NA	NA	$858.30	NA	NA	NA	NA	NA	NA
NRC -4 - Wire DS1 Digital Loop with 4 - Wire DDITS Trunk Port - New - Additional	UDDIT	NA	NA	$514.02	NA	NA	NA	NA	NA	NA
NRC -4 - Wire DS1 Digital Loop with 4 - Wire DDITS Trunk Port - New - 1st - Disconnect	UDDIT	NA	NA	TBD	NA	NA	NA	NA	NA	NA
NRC -4 - Wire DS1 Digital Loop with 4 - Wire DDITS Trunk Port - New - Additional Disconnect	UDDIT	TBD	NA	TBD	TBD	NA	TBD	$11.98	TBD	$15.29
NRC -4 - Wire DS1 Digital Loop with 4 - Wire DDITS Trunk Port - Subsequent Channel Activation - Per Channel - 2-Way Trunk	UDTTA	TBD	$28.96	$28.71	$28.96	$26.60	TBD	$146.91	TBD	$108.67
NRC -4 - Wire DS1 Digital Loop with 4 - Wire DDITS Trunk Port - Subsequent Channel Activation - Per Channel - 1-Way Outward Trunk	UDTTB	TBD	$28.96	$28.71	$28.96	$26.60	TBD	$146.91	TBD	$108.67
NRC -4 - Wire DS1 Digital Loop with 4 - Wire DDITS Trunk Port - Subsequent Channel Activation - Per Channel - 1-Way Inward Trunk Without DID	UDTTC	TBD	$28.96	$28.71	$28.96	$26.60	TBD	$146.91	TBD	$108.67
NRC -4 - Wire DS1 Digital Loop with 4 - Wire DDITS Trunk Port - Subsequent Channel Activation - Per Channel - 1-Way Inward Trunk With DID	UDTTD	TBD	$28.96	$28.71	$28.96	$26.60	TBD	$146.91	TBD	$108.67
NRC -4 - Wire DS1 Digital Loop with 4 - Wire DDITS Trunk Port - Subsequent Channel Activation - Per Channel - 2-Way DID with User Transfer	UDTTE	TBD	$28.96	$28.71	$28.96	$26.60	TBD	$146.91	TBD	$108.67
NRC -4 - Wire DS1 Digital Loop with 4 - Wire DDITS Digital Trunk Port - Subsequent Signaling Changes		TBD	TBD	TBD	TBD	TBD	TBD	$29.65	TBD	$22.92
NRC -4 - Wire DS1 Digital Loop with 4 - Wire DDITS Digital Trunk Port - Subsequent Telephone Numbers		TBD	TBD	TBD	TBD	TBD	TBD	$120.96	TBD	$88.68
NRC - Interoffice Channel Mileage - (Dedicated DS1) FX/FCO for 4 - Wire DS1 Digital Loop with 4 - Wire DDITS Trunk PortFixed cost 0-8 miles (Facilities Termination) - 1st - New Only	1LNO1	$198.15	NA	$147.07	NA	NA	NA	NA	NA	NA
NRC - Interoffice Channel Mileage - (Dedicated DS1) FX/FCO for 4 - Wire DS1 Digital Loop with 4 - Wire DDITS Trunk PortFixed cost 0-8 miles (Facilities Termination) - Additional - New Only	1LNO2	$148.18	NA	$111.75	NA	NA	NA	NA	NA	NA

BELLSOUTH/API RATES
NETWORK ELEMENTS
AND OTHER SERVICES

DESCRIPTION	USOC	AL	FL	GA	KY	LA	MS	NC	SC	TN
NRC - Interoffice Channel Mileage - (Dedicated DS1) FX/FCO for 4 - Wire DS1 Digital Loop with 4 - Wire DDITS Trunk PortFixed cost 0-8 miles (Facilities Termination) - Disconnect - 1st - New Only	1LNO3	$25.44	NA	NA	NA	NA	NA	NA	NA	NA
NRC - Interoffice Channel Mileage - (Dedicated DS1) FX/FCO for 4 - Wire DS1 Digital Loop with 4 - Wire DDITS Trunk PortFixed cost 0-8 miles (Facilities Termination) - Disconnect Additional - New Only	1LNO4	$20.42	NA	NA	NA	NA	NA	NA	NA	NA
BIPOLAR 8 ZERO SUSTITUTION										
NRC - Superframe Format - Conversion or new install 1st	CCOSF	$0.00	$0.00	$0.00	$0.00	$0.00	$0.00	$0.00	$0.00	$0.00
NRC - Superframe Format - Conversion or new install Additional	CCOSF	$0.00	$0.00	$0.00	$0.00	$0.00	$0.00	$0.00	$0.00	$0.00
NRC - Extended Superframe Format - Change or Subsequent Activity - 1st	CCOSF	$0.00	$0.00	$0.00	$0.00	$0.00	$0.00	$0.00	$0.00	$0.00
NRC - Extended Superframe Format - Change or Subsequent Activity - Additional	CCOSF	$600.00	$655.00	$600.00	$730.00	$605.00	$600.00	$615.00	$605.00	$590.00
NRC - Extended Superframe Format - Conversion or New Install 1st	CCOEF	$0.00	$0.00	$0.00	$0.00	$0.00	$0.00	$0.00	$0.00	$0.00
NRC - Extended Superframe Format - Conversion or New Install - Additional	CCOEF	$0.00	$0.00	$0.00	$0.00	$0.00	$0.00	$0.00	$0.00	$0.00
NRC - Extended Superframe Format - Change or Subsequent Activity - 1st	CCOEF	$0.00	$0.00	$0.00	$0.00	$0.00	$0.00	$0.00	$0.00	$0.00
NRC - Extended Superframe Format - Change or Subsequent Activity - Additional	CCOEF	$600.00	$655.00	$600.00	$730.00	$605.00	$600.00	$615.00	$605.00	$590.00
Alternate Mark Inversion (AMI)										
NRC - Superframe Format - 1st	MCOSF	$0.00	$0.00	$0.00	$0.00	$0.00	$0.00	$0.00	$0.00	$0.00
NRC - Superframe Format - Additional	MCOSF	$0.00	$0.00	$0.00	$0.00	$0.00	$0.00	$0.00	$0.00	$0.00
NRC - Extended Superframe Format - 1st	MCOPO	$0.00	$0.00	$0.00	$0.00	$0.00	$0.00	$0.00	$0.00	$0.00
NRC - Extended Superframe Format - Additional	MCOPO	$0.00	$0.00	$0.00	$0.00	$0.00	$0.00	$0.00	$0.00	$0.00
2-Wire Voice Grade Loop with 2-Wire Line Port PBX										
2-Wire Analog Line Port (PBX), per month										
2 WIRE VOICE UNBUNDLED COMBINATION 2-WAY PBX TRUNK - Residence	UEPRD	$2.20	$1.35	$1.79	$2.61	$2.55	$2.12	$2.28	$3.69	$4.54
LINE SIDE UNBUNDLED COMBINATION 2-WAY PBX TRUNK - BUSINESS	UEPPC	$2.20	$1.35	$1.79	$2.61	$2.55	$2.12	$2.28	$3.69	$4.54
LINE SIDE UNBUNDLED OUTWARD PBX TRUNK - BUSINESS	UEPPO	$2.20	$1.35	$1.79	$2.61	$2.55	$2.12	$2.28	$3.69	$4.54
LINE SIDE UNBUNDLED INCOMING PBX TRUNK - BUSINESS	UEPP1	$2.20	$1.35	$1.79	$2.61	$2.55	$2.12	$2.28	$3.69	$4.54
2-WIRE VOICE UNBUNDLED 2-WAY COMBINATION PBX ALABAMA CALLING PORT	UEPA2	$2.20	NA	NA	NA	NA	NA	NA	NA	NA
2-WIRE VOICE UNBUNDLED 2-WAY COMBINATION PBX LOUISIANA CALLING PORT	UEPL2	NA	NA	NA	NA	$2.55	NA	NA	NA	NA
2-WIRE VOICE UNBUNDLED PBX LD TERMINAL PORTS	UEPLD	$2.20	$1.35	$1.79	$2.61	$2.55	$2.12	$2.28	$3.69	$4.54
2-WIRE VOICE UNBUNDLED 2-WAY COMBINATION PBX TENNESSEE CALLING PORT	UEPT2	NA	NA	NA	NA	NA	NA	NA	NA	$4.54
2-WIRE VOICE UNBUNDLED 1-WAY OUTGOING PBX TENNESSEE CALLING PORT	UEPTO	NA	NA	NA	NA	NA	NA	NA	NA	$4.54
2-WIRE VOICE UNBUNDLED 2-WAY COMBINATION PBX USAGE PORT	UEPXA	$2.20	$1.35	$1.79	$2.61	$2.55	$2.12	$2.28	$3.69	$4.54
2-WIRE VOICE UNBUNDLED PBX TOLL TERMINAL HOTEL PORTS	UEPXB	$2.20	$1.35	$1.79	$2.61	$2.55	$2.12	$2.28	$3.69	$4.54
2-WIRE VOICE UNBUNDLED PBX LD DDD TERMINALS PORT	UEPXC	$2.20	$1.35	$1.79	$2.61	$2.55	$2.12	$2.28	$3.69	$4.54
2-WIRE VOICE UNBUNDLED PBX LD TERMINAL SWITCHBOARD PORT	UEPXD	$2.20	$1.35	$1.79	$2.61	$2.55	$2.12	$2.28	$3.69	$4.54
2-WIRE VOICE UNBUNDLED PBX LD TERMINAL SWITCHBOARD IDD CAPABLE PORT	UEPXE	$2.20	$1.35	$1.79	$2.61	$2.55	$2.12	$2.28	$3.69	$4.54
2-WIRE VOICE UNBUNDLED 2-WAY PBX KENTUCKY ROOM AREA CALLING PORT WITHOUT LUD	UEPXF	NA	NA	NA	$2.61	NA	NA	NA	NA	NA
2-WIRE VOICE UNBUNDLED PBX KENTUCKY LUD AREA CALLING PORT	UEPXG	NA	NA	NA	$2.61	NA	NA	NA	NA	NA
2-WIRE VOICE UNBUNDLED PBX KENTUCKY PREMIUM CALLING PORT	UEPXH	NA	NA	NA	$2.61	NA	NA	NA	NA	NA
2-WIRE VOICE UNBUNDLED 2-WAY KENTUCKY AREA CALLING PORT WITHOUT LUD	UEPXJ	NA	NA	NA	$2.61	NA	NA	NA	NA	NA
2-WIRE VOICE UNBUNDLED 2-WAY PBX LOUISIANA LOCAL OPTIONAL CALLING PORT	UEPXK	NA	NA	NA	NA	$2.55	NA	NA	NA	NA
2-WIRE VOICE UNBUNDLED 2-WAY PBX HOTEL/HOSPITAL ECONOMY ADMINISTRATIVE CALLING PORT	UEPXL	$2.20	$1.35	$1.79	$2.61	$2.55	$2.12	$2.28	$3.69	$4.54
2-WIRE VOICE UNBUNDLED 2-WAY PBX HOTEL/HOSPITAL ECONOMY ROOM CALLING PORT	UEPXM	$2.20	$1.35	$1.79	$2.61	$2.55	$2.12	$2.28	$3.69	$4.54

BELLSOUTH/API RATES
NETWORK ELEMENTS
AND OTHER SERVICES

DESCRIPTION	USOC	AL	FL	GA	KY	LA	MS	NC	SC	TN
2-WIRE VOICE UNBUNDLED 1-WAY OUTGOING PBX HOTEL/HOSPITAL ECONOMY ADMINIATRATIVE CALLING PORTTENNESSEE CALLING PORT	UEPXN	NA	NA	NA	NA	NA	NA	NA	NA	$4.54
2-WIRE VOICE UNBUNDLED 1-WAY OUTGOING PBX HOTEL/HOSPITAL DIACOUNT ROOM CALLING PORT	UEPXO	$2.20	$1.35	$1.79	$2.61	$2.55	$2.12	$2.28	$3.69	$4.54
2-WIRE VOICE UNBUNDLED 1-WAY OUTGOING PBX LOUISIANA LOCAL DISCOUNT CALLING PORT	UEPXP	NA	NA	NA	NA	$2.55	NA	NA	NA	NA
2-WIRE VOICE UNBUNDLED 2-WAY PBX MISSISSIPPI LOCAL ECONOMY CALLING PORT	UEPXQ	NA	NA	NA	NA	NA	$2.12	NA	NA	NA
2-WIRE VOICE UNBUNDLED 2-WAY PBX MISSISSIPPI LOCAL OPTIONAL CALLING PORT	UEPXR	NA	NA	NA	NA	NA	$2.12	NA	NA	NA
2-WIRE VOICE UNBUNDLED 1-WAY OUTGOING PBXMEASURED PORT	UEPXS	$2.20	$1.35	$1.79	$2.61	$2.55	$2.12	$2.28	$3.69	$4.54
2-WIRE VOICE UNBUNDLED 2-WAY PBX SOUTH CAROLINA AREA PLUS CALLING PORT	UEPXT	NA	NA	NA	NA	NA	NA	NA	$3.69	NA
2-WIRE VOICE UNBUNDLED PBX COLLIERVILLE & MEMPHIS CALLING PORT	UEPXU	NA	NA	NA	NA	NA	NA	NA	NA	$4.54
2-WIRE VOICE UNBUNDLED 2-WAY PBX TENNESSEE REGIONSERV CALLING PORT	UEPXV	NA	NA	NA	NA	NA	NA	NA	NA	$4.54
LOCAL NUMBER PORTABILITY (REQUIRES ONE PER PORT)	LNPCP									
2-Wire Voice Grade Loop (SL1)										
RC - 2- Wire Voice Grade Loop - Statewide	UEPLX	NA	NA	NA	NA	NA	NA	$14.18	NA	NA
RC - 2- Wire Voice Grade Loop - Zone 1	UEPLX	$14.35	$14.90	$10.80	$14.79	$14.05	$14.59	NA	$17.02	$12.48
RC - 2- Wire Voice Grade Loop - Zone 2	UEPLX	$23.31	$18.51	$12.47	$27.68	$24.14	$19.33	NA	$25.66	$14.42
RC - 2- Wire Voice Grade Loop - Zone 3	UEPLX	$42.24	$24.25	$19.83	$47.78	$49.30	$27.63	NA	$33.99	$21.77
RC - 2- Wire Voice Grade Loop - Zone 4	UEPLX	NA	NA	NA	NA	NA	$36.47	NA	NA	NA
Combination Rates										
RC - 2-Wire Voice Grade Loop with 2-Wire Line Port, Statewide	Note 8	NA	NA	NA	NA	NA	NA	$16.46	NA	NA
RC - 2-Wire Voice Grade Loop with 2-Wire Line Port, Zone 1 (Note 6)	Note 8	$16.55	$16.25	$12.59	#VALUE!	$16.60	$16.71	NA	$20.71	$17.02
RC - 2-Wire Voice Grade Loop with 2-Wire Line Port, Zone 2 (Note 6)	Note 8	$25.51	$19.86	$14.26	#VALUE!	$26.69	$21.45	NA	$29.35	$18.96
RC - 2-Wire Voice Grade Loop with 2-Wire Line Port, Zone 3 (Note 6)	Note 8	$44.44	$25.60	$21.62	#VALUE!	$51.85	$29.75	NA	$37.68	$26.31
RC - 2-Wire Voice Grade Loop with 2-Wire Line Port, Zone 4 (Note 6)	Note 8	NA	NA	NA	NA	NA	$38.59	NA	NA	NA
Nonrecurring Charges										
NRC - 2-Wire Voice Grade Loop/Line Port Combination - 1st, Switch as is	USAC2	$2.80	$15.82	$2.01	$10.00	$3.80	$5.20	$2.77	$1.59	$1.03
NRC - 2-Wire Voice Grade Loop/Line Port Combination - Add'l, Switch as is	USAC2	$0.41	$3.80	$0.3108	$10.00	$0.29	$0.41	$0.40	$0.40	$0.2886
NRC - 2-Wire Voice Grade Loop/Line Port Combination - 1st, Switch with change	USACC	$2.80	$15.82	$2.01	$10.00	$3.80	$5.20	$2.77	$1.59	$1.03
NRC - 2-Wire Voice Grade Loop/Line Port Combination - Add'l, Switch with change	USACC	$0.41	$3.80	$0.3108	$10.00	$0.29	$0.41	$0.40	$0.40	$0.2886
NRC - 2-Wire Voice Grade Loop/Line Port Combination - Subsequent	USAS2	$10.00	$10.00	$10.00	$10.00	$10.00	$10.00	$10.00	$10.00	$10.00
NRC - 2-Wire Voice Grade Loop/Line Port Combination - OSS LSR Charge, Electronic, per LSR received from the CLEC by one of the OSS interactive interfaces (Note 7)	SOMEC	$3.50	$2.75	$3.50	$3.50	$3.50	$3.50	$3.50	$3.50	$3.50
NRC - 2-Wire Voice Grade Loop/Line Port Combination - Incremental Cost - Manual Svc.Order vs. Electronic - 1st	SOMAN	$40.71	$21.56	$33.67	$19.99	$31.92	$43.52	$40.18	$43.19	$30.89
NRC - 2-Wire Voice Grade Loop/Line Port Combination - Incremental Cost - Manual Svc.Order vs. Electronic - Add'l	SOMAN	$9.58	$21.56	$7.88	$19.99	$7.32	$0.99	$9.45	$9.91	$7.03
NRC- 2 Wire Voice Grade Loop/Line Port Combination - Subsequent Database Update - Electronic		$1.44	TBD	TBD	TBD	$2.11	$2.87	$1.42	$0.71	$0.76
NRC- 2 Wire Voice Grade Loop/Line Port Combination - Subsequent Database Update - Manual Service Order		$8.25	TBD	TBD	TBD	$5.12	$6.88	$10.27	$8.91	$7.97
NRC - Electronic Service Order Disconnect		TBD	$0.42	TBD	TBD	TBD	TBD	TBD	TBD	TBD
NRC - Incremental Manual Service Order Disconnect		$20.00	$3.84	$20.00	$20.00	$20.00	$20.00	$20.00	$20.00	$20.00
NRCs for New (not Currently Combined) as ordered in Georgia:										
NRC - 2-Wire Voice Grade Loop with 2-Wire Line Port - New - 1st	UEPRD	NA	NA	$22.14	NA	NA	NA	NA	NA	NA
NRC - 2-Wire Voice Grade Loop with 2-Wire Line Port - New - Add'l	UEPRD	NA	NA	$15.25	NA	NA	NA	NA	NA	NA
NRC - 2-Wire Voice Grade Loop with 2-Wire Line Port - New - 1st	UEPPC	NA	NA	$22.14	NA	NA	NA	NA	NA	NA
NRC - 2-Wire Voice Grade Loop with 2-Wire Line Port - New - Add'l	UEPPC	NA	NA	$15.25	NA	NA	NA	NA	NA	NA
NRC - 2-Wire Voice Grade Loop with 2-Wire Line Port - New - 1st	UEPPO	NA	NA	$22.14	NA	NA	NA	NA	NA	NA

BELLSOUTH/API RATES
NETWORK ELEMENTS
AND OTHER SERVICES

	DESCRIPTION	USOC	AL	FL	GA	KY	LA	MS	NC	SC	TN
	NRC - 2-Wire Voice Grade Loop with 2-Wire Line Port - New - Add'l	UEPPO	NA	NA	$15.25	NA	NA	NA	NA	NA	NA
	NRC - 2-Wire Voice Grade Loop with 2-Wire Line Port - New - 1st	UEPP1	NA	NA	$22.14	NA	NA	NA	NA	NA	NA
	NRC - 2-Wire Voice Grade Loop with 2-Wire Line Port - New - Add'l	UEPP1	NA	NA	$15.25	NA	NA	NA	NA	NA	NA
	NRC - 2-Wire Voice Grade Loop with 2-Wire Line Port - New - 1st	UEPLD	NA	NA	$22.14	NA	NA	NA	NA	NA	NA
	NRC - 2-Wire Voice Grade Loop with 2-Wire Line Port - New - Add'l	UEPLD	NA	NA	$15.25	NA	NA	NA	NA	NA	NA
	NRC - 2-Wire Voice Grade Loop with 2-Wire Line Port - New - 1st	UEPXA	NA	NA	$22.14	NA	NA	NA	NA	NA	NA
	NRC - 2-Wire Voice Grade Loop with 2-Wire Line Port - New - Add'l	UEPXA	NA	NA	$15.25	NA	NA	NA	NA	NA	NA
	NRC - 2-Wire Voice Grade Loop with 2-Wire Line Port - New - 1st	UEPXB	NA	NA	$22.14	NA	NA	NA	NA	NA	NA
	NRC - 2-Wire Voice Grade Loop with 2-Wire Line Port - New - Add'l	UEPXB	NA	NA	$15.25	NA	NA	NA	NA	NA	NA
	NRC - 2-Wire Voice Grade Loop with 2-Wire Line Port - New - 1st	UEPXC	NA	NA	$22.14	NA	NA	NA	NA	NA	NA
	NRC - 2-Wire Voice Grade Loop with 2-Wire Line Port - New - Add'l	UEPXC	NA	NA	$15.25	NA	NA	NA	NA	NA	NA
	NRC - 2-Wire Voice Grade Loop with 2-Wire Line Port - New - 1st	UEPXD	NA	NA	$22.14	NA	NA	NA	NA	NA	NA
	NRC - 2-Wire Voice Grade Loop with 2-Wire Line Port - New - Add'l	UEPXD	NA	NA	$15.25	NA	NA	NA	NA	NA	NA
	NRC - 2-Wire Voice Grade Loop with 2-Wire Line Port - New - 1st	UEPXE	NA	NA	$22.14	NA	NA	NA	NA	NA	NA
	NRC - 2-Wire Voice Grade Loop with 2-Wire Line Port - New - Add'l	UEPXE	NA	NA	$15.25	NA	NA	NA	NA	NA	NA
	NRC - 2-Wire Voice Grade Loop with 2-Wire Line Port - New - 1st	UEPXL	NA	NA	$22.14	NA	NA	NA	NA	NA	NA
	NRC - 2-Wire Voice Grade Loop with 2-Wire Line Port - New - Add'l	UEPXL	NA	NA	$15.25	NA	NA	NA	NA	NA	NA
	NRC - 2-Wire Voice Grade Loop with 2-Wire Line Port - New - 1st	UEPXM	NA	NA	$22.14	NA	NA	NA	NA	NA	NA
	NRC - 2-Wire Voice Grade Loop with 2-Wire Line Port - New - Add'l	UEPXM	NA	NA	$15.25	NA	NA	NA	NA	NA	NA
	NRC - 2-Wire Voice Grade Loop with 2-Wire Line Port - New - 1st	UEPXO	NA	NA	$22.14	NA	NA	NA	NA	NA	NA
	NRC - 2-Wire Voice Grade Loop with 2-Wire Line Port - New - Add'l	UEPXO	NA	NA	$15.25	NA	NA	NA	NA	NA	NA
	NRC - 2-Wire Voice Grade Loop with 2-Wire Line Port - New - 1st	UEPXS	NA	NA	$22.14	NA	NA	NA	NA	NA	NA
	NRC - 2-Wire Voice Grade Loop with 2-Wire Line Port - New - Add'l	UEPXS	NA	NA	$15.25	NA	NA	NA	NA	NA	NA
	NRC - 2-Wire Voice Grade Loop/Line Port Combination - Subsequent	USAS2	NA	NA	$10.00	NA	NA	NA	NA	NA	NA
	NRC - 2-Wire Voice Grade Loop with 2-Wire Line Port - New - Disconnect - 1st		NA	NA	$8.45	NA	NA	NA	NA	NA	NA
	NRC - 2-Wire Voice Grade Loop with 2-Wire Line Port - New - Disconnect - Add'l		NA	NA	$3.91	NA	NA	NA	NA	NA	NA
	NRC - 2-Wire Voice Grade Loop/Line Port Combination - OSS LSR Charge, Electronic, per LSR received from the CLEC by one of the OSS interactive interfaces (Note 7)	SOMEC	NA	NA	$3.50	NA	NA	NA	NA	NA	NA
	NRC - 2-Wire Voice Grade Loop with 2-Wire Line Port - Incremental Cost Manual vs. Electronic - New - 1st		NA	NA	$37.06	NA	NA	NA	NA	NA	NA
	NRC - 2-Wire Voice Grade Loop with 2-Wire Line Port - Incremental Cost Manual vs. Electronic - New - Add'l		NA	NA	$8.19	NA	NA	NA	NA	NA	NA
	NRC- 2 Wire Voice Grade Loop/Line Port Combination - Subsequent Database Update - Electronic		NA	NA	TBD	NA	NA	NA	NA	NA	NA
	NRC- 2 Wire Voice Grade Loop/Line Port Combination - Subsequent Database Update - Manual Service Order		NA	NA	TBD	NA	NA	NA	NA	NA	NA
	NRC - 2-Wire Voice Grade Loop with 2-Wire Line Port - Incremental Cost Manual vs. Electronic - New - Disconnect		NA	NA	$11.17	NA	NA	NA	NA	NA	NA
	All Other Loop/Port Combinations		TBD	TBD	Note 2	TBD	TBD	TBD	TBD	TBD	TBD
	LOCAL NUMBER PORTABILITY (REQUIRES ONE PER PORT)	LNPCX									
NOTES:											
	Interim rates subject to true-up.										
1	Market Rates will apply in those areas where BellSouth is not required to provide circuit switching pursuant to FCC rules.										
2	In Georgia, rates will apply for Currently Combined as well as not Currently Combined loop/port combinations unless otherwise identified.										

BELLSOUTH/API RATES
NETWORK ELEMENTS
AND OTHER SERVICES

	DESCRIPTION	USOC	AL	FL	GA	KY	LA	MS	NC	SC	TN
3	In the absence of ordered rates by a State Commission, the recurring rates for Currently Combined combinations of loop/port network elements will be the sum of the recurring rates for the UNEs which make up the combinations, and the nonrecurring rates shall be as set forth in this section.										
4	End Office and Tandem Switching Usage and Common Transport Usage rates in the Port section of this rate exhibit shall apply to all combinations of loop/port network elements.										
5	Deleted										
6	Geographically Deaveraged UNE Zones and applicable rates have been established for certain services, as shown in this Agreement. Where Geographically Deaveraged UNE Zones and applicable rates are established, Statewide rates are obsolete. Further, BellSouth is in the process of enhancing its billing systems in order to accomodate this Geographically Deaveraged UNE Zone Rate Structure. Until these enhancements are accomplished, estimated to be mid 2001, the UNE Zone 1 rate will be billed for all services residing in Zones 1, 2, 3 or 4, i.e., Rates for services residing in UNE Zones 2, 3 and UNE Zone 4, where applicable, will not be billed. Once billing enhancements are complete, all applicable UNE Zone rates reflected in this Agreement will be billed. Reference Internet Website http://www.interconnection.bellsouth.com/become_clec/docs/interconnection/deavuzns.pdf to view Geographically Deaveraged UNE Zone Designations by Central Office										
7	In the absence of ordered OSS rates by a state commission, BellSouth will offer regionwide rates										
8	There is not a unique combination USOC. CLEC should submit the loop and port USOCs.										
9	Rates in TN and FL are interim and shall be trued-up when final rates are ordered.										

BELLSOUTH/API RATES
NETWORK ELEMENTS
AND OTHER SERVICES

ENHANCED EXTENDED LINKS (EELs)										
New EEL rates are the sum of the individual UNE network elements (interoffice transport and loop [channelization if applicable].										
DS1 Interoffice Channel and 2-wire VG Local Loop EEL:	**USOC**	**AL**	**FL**	**GA**	**KY**	**LA**	**MS**	**NC**	**SC**	**TN**
Recurring Charges										
2-wire VG Loop per month, statewide	UEAL2	NA	NA	NA	NA	NA	NA	$19.50	NA	NA
2-wire VG Loop per month, Zone 1 (Note 1)	UEAL2	NA	$20.52	$15.40	NA	$17.65	NA	TBD	NA	$15.54
2-wire VG Loop per month, Zone 2 (Note 1)	UEAL2	NA	TBD	$17.78	NA	$30.32	NA	TBD	NA	$19.55
2-wire VG Loop per month, Zone 3 (Note 1)	UEAL2	NA	TBD	$28.26	NA	$61.93	NA	TBD	NA	$28.02
2-wire VG Loop per month, Zone 4 (Note 1)	NA	NA	NA	NA	NA	NA	NA	NA	NA	NA
Interoffice Channel - Dedicated - DS1 - per mile per month	1L5XX	NA	$0.6013	$0.4523	NA	$0.7831	NA	$0.5753	NA	$0.3525
Interoffice Channel - Dedicated - DS1 - Facility Termination per month	U1TF1	NA	$99.79	$78.47	NA	$93.40	NA	$71.29	NA	$75.83
DS1 Channelized System per month	MQ1	NA	$153.60	$18.23	NA	$209.87	NA	$177.72	NA	$165.21
VG (COCI) interface card per month	1D1VG	NA	$1.45	$2.20	NA	$1.62	NA	$1.64	NA	$1.25
Non-Recurring Charges - New EEL (Note 2)(Note 3)										
NRC- DS1 interoffice Facility Termination - 1st	U1TF1	NA	$171.01	$142.64	NA	$160.49	NA	$217.17	NA	$165.53
NRC-DS1 interoffice Facility Termination - Add'l	U1TF1	NA	$101.84	$94.87	NA	$123.03	NA	$163.75	NA	$124.84
NRC-2-wire VG Local Loop - 1st	UEAL2	NA	$38.02	$77.54	NA	$128.42	NA	$142.97	NA	$103.76
NRC-2-wire VG Local Loop - Add'l	UEAL2	NA	$35.15	$51.57	NA	$93.60	NA	$106.56	NA	$65.84
NRC-DS1 Channelization System -1st	MQ1	NA	$275.18	$206.09	NA	$220.07	NA	$193.63	NA	$222.87
NRC-DS1 Channelization System - Add'l	MQ1	NA	$137.77	$137.06	NA	$135.20	NA	$118.37	NA	$135.80
NRC-VG(COCI)interface card -1st	1D1VG	NA	$12.16	$12.02	NA	$12.29	NA	$15.76	NA	$12.61
NRC-VG(COCI)interface card - Add'	1D1VG	NA	$8.77	$8.66	NA	$8.80	NA	$11.28	NA	$9.03
NRC- 2-wire VG Local Loop and Channelized DS1 Interoffice Combination - Electroni	SOMEC	NA	$3.17	$3.50	NA	$3.50	NA	$3.50	NA	$3.50
NRC- 2-wire VG Local Loop and Channelized DS1 Interoffice Combination - Manual S	SOMAN	NA	$25.40	NA	NA	NA	NA	NA	NA	$19.99
NRC- 2-wire VG Local Loop and Channelized DS1 Interoffice Combination - Manual S	SOMAN	NA	NA	$33.63	NA	$242.20	NA	$66.20	NA	NA
NRC- 2-wire VG Local Loop and Channelized DS1 Interoffice Combination - Manual S	SOMAN	NA	NA	$27.49	NA	$153.37	NA	$51.40	NA	NA
NRC- 2-wire VG Local Loop and Channelized DS1 Interoffice Combination - Manual S	SOMAN	NA	NA	$19.88	NA	$45.91	NA	NA	NA	NA
NRC- 2-wire VG Local Loop and Channelized DS1 Interoffice Combination - Manual S	SOMAN	NA	NA	$11.85	NA	$8.06	NA	NA	NA	NA
DS1 Interoffice Channel and 4-wire VG Local Loop EEL:										
Recurring Charges										
4-wire VG Loop per month	UEAL4	NA	NA	NA	NA	NA	NA	$27.49	NA	NA
4-wire VG Loop per month, Zone 1 (Note 1)	UEAL4	NA	$24.26	$22.88	NA	$24.36	NA	NA	NA	$15.92
4-wire VG Loop per month, Zone 2 (Note 1)	UEAL4	NA	$35.51	$26.42	NA	$41.85	NA	NA	NA	$20.79
4-wire VG Loop per month, Zone 3 (Note 1)	UEAL4	NA	$78.35	$41.99	NA	$86.47	NA	NA	NA	$27.18
4-wire VG Loop per month, Zone 4 (Note 1)	NA	NA	NA	NA	NA	NA	NA	NA	NA	NA
Interoffice Channel - Dedicated - DS1 - per mile per month	1L5XX	NA	$0.6013	$0.4523	NA	$0.7831	NA	$0.0783	NA	$0.3525
Interoffice Channel - Dedicated - DS1 - Facility Termination per month	U1TF1	NA	$99.79	$78.47	NA	$93.40	NA	$71.29	NA	$75.83
DS1 Channelized System per month	MQ1	NA	$153.60	$18.23	NA	$209.87	NA	$177.72	NA	$165.21
VG (COCI) interface card per month	1D1VG	NA	$1.45	$2.67	NA	$1.62	NA	$1.64	NA	$1.25
Non-Recurring Charges - New EEL (Note 2) (Note 3)										
NRC- DS1 interoffice Facility Termination - 1st	U1TF1	NA	$171.01	$142.64	NA	$160.49	NA	$534.48	NA	$165.53
NRC-DS1 interoffice Facility Termination - Add'l	U1TF1	NA	$101.84	$94.87	NA	$123.03	NA	$462.69	NA	$124.84
NRC-4-wire VG Local Loop - 1st	UEAL4	NA	$329.76	$228.99	NA	$128.42	NA	$288.47	NA	$103.76
NRC-4-wire VG Local Loop - Add'l	UEAL4	NA	$178.91	$203.26	NA	$93.60	NA	$237.45	NA	$65.84
NRC-DS1 Channelization System -1st	MQ1	NA	$275.18	$206.09	NA	$220.07	NA	$301.74	NA	$222.87
NRC-DS1 Channelization System - Add'l	MQ1	NA	$137.77	$137.06	NA	$135.20	NA	$182.57	NA	$135.80
NRC-VG(COCI)interface card -1st	1D1VG	NA	$12.16	$12.02	NA	$12.29	NA	$15.76	NA	$12.61
NRC-VG(COCI)interface card - Add'	1D1VG	NA	$8.77	$8.66	NA	$8.80	NA	$11.28	NA	$9.03
NRC-DS1 interoffice channel and 4-wire VG Local Loop Combination - Electronic Svc	SOMEC	NA	$3.17	$3.50	NA	$3.50	NA	$3.50	NA	$3.50
NRC-DS1 interoffice channel and 4-wire VG Local Loop Combination - Manual Svc O	SOMAN	NA	$25.40	NA	NA	NA	NA	NA	NA	$19.99
NRC-DS1 interoffice channel and 4-wire VG Local Loop Combination - Manual Svc O	SOMAN	NA	NA	$33.63	NA	$242.20	NA	$66.20	NA	NA
NRC-DS1 interoffice channel and 4-wire VG Local Loop Combination - Manual Svc O	SOMAN	NA	NA	$27.49	NA	$153.37	NA	$51.40	NA	NA
NRC-DS1 interoffice channel and 4-wire VG Local Loop Combination - Manual Svc O	SOMAN	NA	NA	$19.88	NA	$45.91	NA	NA	NA	NA
NRC-DS1 interoffice channel and 4-wire VG Local Loop Combination - Manual Svc O	SOMAN	NA	NA	$11.85	NA	$8.06	NA	NA	NA	NA

BELLSOUTH/API RATES
NETWORK ELEMENTS
AND OTHER SERVICES

		New EEL rates are the sum of the individual UNE network elements (interoffice transport and loop [channelization if applicable].									
		DS1 Interoffice Channel and 2-wire ISDN Local Loop:									
		Recurring Charges									
		2-wire ISDN Loop per month	U1L2X	NA	NA	NA	NA	NA	NA	$24.98	NA	NA
		2-wire ISDN Loop per month, Zone 1 (Note 1)	U1L2X	NA	$32.34	$21.89	NA	$21.15	NA	TBD	NA	$15.54
		2-wire ISDN Loop per month, Zone 2 (Note 1)	U1L2X	NA	$47.35	$25.27	NA	$36.22	NA	TBD	NA	$19.55
		2-wire ISDN Loop per month, Zone 3 (Note 1)	U1L2X	NA	$104.47	$40.17	NA	$74.19	NA	TBD	NA	$28.02
		2-wire ISDN Loop per month, Zone 4 (Note 1)	NA	NA	NA	NA	NA	NA	NA	NA	NA	NA
		Interoffice Channel - Dedicated - DS1 - per mile per month	1L5XX	NA	$0.6013	$0.4523	NA	$0.7831	NA	$0.5753	NA	$0.3525
		Interoffice Channel - Dedicated - DS1 - Facility Termination per month	U1TF1	NA	$99.79	$78.47	NA	$93.40	NA	$71.29	NA	$75.83
		DS1 Channelized System per month	MQ1	NA	$153.60	$18.23	NA	$209.87	NA	$177.72	NA	$165.21
		2-wire ISDN(BRITE COCI) per month	UC1CA	NA	$3.83	$3.71	NA	$4.18	NA	$3.76	NA	$3.33
		Non-Recurring Charges - New EEL (Note 2)(Note 3)									
		NRC- DS1 interoffice Facility Termination - 1st	U1TF1	NA	$171.01	$142.64	NA	$160.49	NA	$217.17	NA	$165.53
		NRC-DS1 interoffice Facility Termination - Add'l	U1TF1	NA	$101.84	$94.87	NA	$123.03	NA	$163.75	NA	$124.84
		NRC- 2-wire ISDN Local Loop - 1st	U1L2X	NA	$329.76	$77.54	NA	$223.27	NA	$325.91	NA	$58.50
		NRC- 2-wire ISDN Local Loop - Add'l	U1L2X	NA	$148.55	$51.57	NA	$172.63	NA	$251.31	NA	$31.00
		NRC-DS1 Channelization System -1st	MQ1	NA	$275.18	$206.09	NA	$220.07	NA	$301.74	NA	$222.87
		NRC-DS1 Channelization System - Add'l	MQ1	NA	$137.77	$137.06	NA	$135.20	NA	$182.57	NA	$135.80
		NRC-2-wire BRITE(COCI)interface card -1st	UC1CA	NA	$12.16	$12.02	NA	$12.29	NA	$15.76	NA	$12.61
		NRC-2-wire BRITE(COCI)interface card -Add'l	UC1CA	NA	$8.77	$8.66	NA	$8.80	NA	$11.28	NA	$9.03
		NRC-DS1 interoffice channel and 2-wire ISDN Local Loop Combination - Electronic S	SOMEC	NA	$3.17	$3.50	NA	$3.50	NA	$3.50	NA	$3.50
		NRC-DS1 interoffice channel and 2-wire ISDN Local Loop Combination - Manual Svc	SOMAN	NA	$25.40	NA	NA	NA	NA	NA	NA	$19.99
		NRC-DS1 interoffice channel and 2-wire ISDN Local Loop Combination - Manual Svc	SOMAN	NA	NA	$33.63	NA	$57.58	NA	$38.07	NA	NA
		NRC-DS1 interoffice channel and 2-wire ISDN Local Loop Combination - Manual Svc	SOMAN	NA	NA	$27.49	NA	$36.31	NA	$38.07	NA	NA
		NRC-DS1 interoffice channel and 2-wire ISDN Local Loop Combination - Manual Svc	SOMAN	NA	NA	$19.88	NA	$16.12	NA	NA	NA	NA
		NRC-DS1 interoffice channel and 2-wire ISDN Local Loop Combination - Manual Svc	SOMAN	NA	NA	$11.85	NA	$8.06	NA	NA	NA	NA
		DS1 Interoffice Channel and 4-wire 56 kbps Local Loop:									
		Recurring Charges									
		4-wire 56kbps Loop per month	UDL56	NA	NA	NA	NA	NA	NA	$32.67	NA	NA
		4-wire 56kbps Loop per month, Zone 1 (Note 1)	UDL56	NA	$39.08	$26.44	NA	$27.50	NA	TBD	NA	$36.45
		4-wire 56kbps Loop per month, Zone 2 (Note 1)	UDL56	NA	$57.21	$26.42	NA	$47.24	NA	TBD	NA	$45.87
		4-wire 56kbps Loop per month, Zone 3 (Note 1)	UDL56	NA	$126.22	$46.53	NA	$96.48	NA	TBD	NA	$65.75
		4-wire 56kbps Loop per month, Zone 4 (Note 1)	NA	NA	NA	NA	NA	NA	NA	NA	NA	NA
		Interoffice Channel - Dedicated - DS1 - per mile per month	1L5XX	NA	$0.6013	$0.4523	NA	$0.7831	NA	$0.5753	NA	$0.3525
		Interoffice Channel - Dedicated - DS1 - Facility Termination per month	U1TF1	NA	$99.79	$78.47	NA	$93.40	NA	$71.29	NA	$75.83
		DS1 Channelized System per month	MQ1	NA	$153.60	$18.23	NA	$209.87	NA	$177.72	NA	$165.21
		4-wire 56kbps card COCI per month	1D1DD	NA	$2.20	$1.06	NA	$3.12	NA	$2.88	NA	$2.46
		Non-Recurring Charges - New EEL (Note 2) (Note 3)									
		NRC- DS1 interoffice Facility Termination - 1st	U1TF1	NA	$171.01	$142.64	NA	$160.49	NA	$217.17	NA	$165.53
		NRC-DS1 interoffice Facility Termination - Add'l	U1TF1	NA	$101.84	$94.87	NA	$123.03	NA	$163.75	NA	$124.84
		NRC-4-wire 56kbps Local Loop - 1st	UDL56	NA	$329.76	$395.14	NA	$333.28	NA	$489.04	NA	$643.00
		NRC-4-wire 56kbps Local Loop - Add'l	UDL56	NA	$148.55	$206.98	NA	$230.50	NA	$337.51	NA	$421.26
		NRC-DS1 Channelization System -1st	MQ1	NA	$275.18	$206.09	NA	$220.07	NA	$301.74	NA	$222.87
		NRC-DS1 Channelization System - Add'l	MQ1	NA	$137.77	$137.06	NA	$135.20	NA	$182.57	NA	$135.80
		NRC-4-wire 56kbps(COCI)interface card -1st	1D1DD	NA	$12.16	$12.02	NA	$12.29	NA	$15.76	NA	$12.61
		NRC-4-wire 56kbps(COCI)interface card -Add'l	1D1DD	NA	$8.77	$8.66	NA	$8.80	NA	$11.28	NA	$9.03
		NRC-DS1 interoffice channel and 4-wire 56kbps Local Loop Combination - Electronic	SOMEC	NA	$3.17	$3.50	NA	$3.50	NA	$3.50	NA	$3.50
		NRC-DS1 interoffice channel and 4-wire 56kbps Local Loop Combination - Manual Sv	SOMAN	NA	$25.40	NA	NA	NA	NA	NA	NA	$19.99
		NRC-DS1 interoffice channel and 4-wire 56kbps Local Loop Combination - Manual Sv	SOMAN	NA	NA	$33.63	NA	$242.20	NA	$65.01	NA	NA
		NRC-DS1 interoffice channel and 4-wire 56kbps Local Loop Combination - Manual Sv	SOMAN	NA	NA	$27.49	NA	$153.37	NA	$50.83	NA	NA
		NRC-DS1 interoffice channel and 4-wire 56kbps Local Loop Combination - Manual Sv	SOMAN	NA	NA	$19.88	NA	$45.91	NA	NA	NA	NA
		NRC-DS1 interoffice channel and 4-wire 56kbps Local Loop Combination - Manual Sv	SOMAN	NA	NA	$11.85	NA	$8.06	NA	NA	NA	NA

BELLSOUTH/API RATES
NETWORK ELEMENTS
AND OTHER SERVICES

		New EEL rates are the sum of the individual UNE network elements (interoffice transport and loop [channelization if applicable].									
		DS1 Interoffice Channel and 4-wire 64 kbps Local Loop:									
		Recurring Charges									
		4-wire 64kbps Loop per month	UDL64	NA	NA	NA	NA	NA	NA	$32.67	NA	NA
		4-wire 64kbps Loop per month, Zone 1 (Note 1)	UDL64	NA	$39.08	$26.44	NA	$27.50	NA	TBD	NA	$36.45
		4-wire 64kbps Loop per month, Zone 2 (Note 1)	UDL64	NA	$57.21	$30.53	NA	$47.24	NA	TBD	NA	$45.87
		4-wire 64kbps Loop per month, Zone 3 (Note 1)	UDL64	NA	$126.22	$46.53	NA	$96.48	NA	TBD	NA	$65.75
		4-wire 64kbps Loop per month, Zone 4 (Note 1)	NA	NA	NA	NA	NA	NA	NA	NA	NA	NA
		Interoffice Channel - Dedicated - DS1 - per mile per month	1L5XX	NA	$0.6013	$0.4523	NA	$0.7831	NA	$0.5753	NA	$0.3525
		Interoffice Channel - Dedicated - DS1 - Facility Termination per month	U1TF1	NA	$99.79	$78.47	NA	$93.40	NA	$71.29	NA	$75.83
		DS1 Channelized System per month	MQ1	NA	$153.60	$18.23	NA	$209.87	NA	$177.72	NA	$165.21
		4-wire 64kbps card COCI per month	1D1DD	NA	$1.06	$1.06	NA	$3.12	NA	$2.88	NA	$2.46
		Non-Recurring Charges - New EEL (Note 2) (Note 3)									
		NRC- DS1 interoffice - 1st	U1TF1	NA	$171.01	$142.64	NA	$160.49	NA	$217.17	NA	$165.53
		NRC- DS1 interoffice - Add'l	U1TF1	NA	$101.84	$94.87	NA	$123.03	NA	$163.75	NA	$124.84
		NRC-4-wire 64kbps Local Loop - 1st	UDL64	NA	$329.76	$395.14	NA	$333.28	NA	$489.04	NA	$103.76
		NRC-4-wire 64kbps Local Loop - Add'l	UDL64	NA	$148.55	$206.98	NA	$230.50	NA	$337.51	NA	$65.84
		NRC-DS1 Channelization System -1st	MQ1	NA	$275.18	$206.09	NA	$220.07	NA	$301.74	NA	$222.87
		NRC-DS1 Channelization System - Add'l	MQ1	NA	$137.77	$137.06	NA	$135.20	NA	$288.33	NA	$135.80
		NRC-4-wire 64kbps(COCI)interface card -1st	1D1DD	NA	$12.16	$12.02	NA	$12.29	NA	$15.76	NA	$12.61
		NRC-4-wire 64kbps(COCI)interface card -Add'l	1D1DD	NA	$8.77	$8.66	NA	$8.80	NA	$11.28	NA	$9.03
		NRC-DS1 interoffice channel and 4-wire 64kbps Local Loop Combination - Electronic	SOMEC	NA	$3.17	$3.50	NA	$3.50	NA	$3.50	NA	$3.50
		NRC-DS1 interoffice channel and 4-wire 64kbps Local Loop Combination - Manual Sv	SOMAN	NA	$25.40	NA	NA	NA	NA	NA	NA	$19.99
		NRC-DS1 interoffice channel and 4-wire 64kbps Local Loop Combination - Manual Sv	SOMAN	NA	NA	$33.63	NA	$242.20	NA	$65.01	NA	NA
		NRC-DS1 interoffice channel and 4-wire 64kbps Local Loop Combination - Manual Sv	SOMAN	NA	NA	$27.49	NA	$153.37	NA	$50.83	NA	NA
		NRC-DS1 interoffice channel and 4-wire 64kbps Local Loop Combination - Manual Sv	SOMAN	NA	NA	$19.88	NA	$45.91	NA	NA	NA	NA
		NRC-DS1 interoffice channel and 4-wire 64kbps Local Loop Combination - Manual Sv	SOMAN	NA	NA	$11.85	NA	$8.06	NA	NA	NA	NA
		DS1 Interoffice Channel and DS1 Interoffice Local Loop:									
		Recurring Charges									
		DS1 Loop per month	USLXX	NA	NA	NA	NA	NA	NA	$62.78	NA	NA
		DS1 Loop per month, Zone 1 (Note 1)	USLXX	NA	$64.69	$52.40	NA	$56.32	NA	TBD	NA	NA
		DS1 Loop per month, Zone 2 (Note 1)	USLXX	NA	$94.71	$60.51	NA	$96.73	NA	TBD	NA	NA
		DS1 Loop per month, Zone 3 (Note 1)	USLXX	NA	$208.93	$96.18	NA	$197.57	NA	TBD	NA	NA
		DS1 Loop per month, Zone 4 (Note 1)	NA	NA	NA	NA	NA	NA	NA	NA	NA	NA
		Interoffice Channel - Dedicated - DS1 - per mile per month	1L5XX	NA	$0.6013	$0.4523	NA	$0.7831	NA	$0.5753	NA	NA
		Interoffice Channel - Dedicated - DS1 - Facility Termination per month	U1TF1	NA	$99.79	$78.47	NA	$93.40	NA	$71.29	NA	NA
		Non-Recurring Charges - New EEL (Note 2) (Note 3)									
		NRC- DS1 interoffice - 1st	U1TF1	NA	$171.01	$142.64	NA	$160.49	NA	$217.17	NA	NA
		NRC- DS1 interoffice - Add'l	U1TF1	NA	$101.84	$94.87	NA	$123.03	NA	$163.75	NA	NA
		NRC-DS1 Local Loop - 1st	USLXX	NA	$627.78	$627.44	NA	$502.73	NA	$714.84	NA	NA
		NRC-DS1 Local Loop - Add'l	USLXX	NA	$377.43	$231.49	NA	$293.92	NA	$421.47	NA	NA
		NRC-DS1 interoffice channel and DS1 Local Loop Combination - Electronic Svc Orde	SOMEC	NA	$3.17	$3.50	NA	$3.50	NA	$3.50	NA	$3.50
		NRC-DS1 interoffice channel and DS1 Local Loop Combination - Manual Svc Order,	SOMAN	NA	$25.40	NA	NA	NA	NA	NA	NA	$19.99
		NRC-DS1 interoffice channel and DS1 Local Loop Combination - Manual Svc Order -	SOMAN	NA	NA	$33.63	NA	$242.20	NA	$65.01	NA	NA
		NRC-DS1 interoffice channel and DS1 Local Loop Combination - Manual Svc Order -	SOMAN	NA	NA	$27.49	NA	$153.37	NA	$50.83	NA	NA
		NRC-DS1 interoffice channel and DS1 Local Loop Combination - Manual Svc Order -	SOMAN	NA	NA	$19.88	NA	$45.91	NA	NA	NA	NA
		NRC-DS1 interoffice channel and DS1 Local Loop Combination - Manual Svc Order -	SOMAN	NA	NA	$11.85	NA	$8.06	NA	NA	NA	NA
		DS3 Interoffice Channel and DS3 Local Loop:									
		Recurring Charges									
		DS3 Loop per Facility Termination per month	UE3PX	NA	$404.58	$390.34	NA	$669.01	NA	$387.01	NA	$607.28
		DS3 Loop per mile	1L5ND	NA	$11.77	$8.90	NA	$30.34	NA	$32.53	NA	$23.76
		Interoffice Channel - Dedicated - DS3 - FacilityTermination per month	U1TF3	NA	$1,121.93	$717.60	NA	$1,101	NA	$720.38	NA	$760.20
		Interoffice Channel - Dedicated - DS3 - per mile per month	1L5XX	NA	$4.17	$6.46	NA	$14.04	NA	$12.98	NA	$5.89
		Non-Recurring Charges - New EEL (Note 2)(Note 3)									

BELLSOUTH/API RATES
NETWORK ELEMENTS
AND OTHER SERVICES

		New EEL rates are the sum of the individual UNE network elements (interoffice transport and loop [channelization if applicable].										
		NRC- DS3 interoffice - 1st	U1TF3	NA	$154.30	$633.41	NA	$713.57	NA	$794.94	NA	$729.27
		NRC- DS3 interoffice - Add'l	U1TF3	NA	$77.50	$449.91	NA	$404.36	NA	$579.55	NA	$411.98
		NRC-DS3 Local Loop - 1st	UE3PX	NA	$1,020.45	$761.81	NA	$811.30	NA	$964.04	NA	$829.52

BELLSOUTH/API RATES
NETWORK ELEMENTS
AND OTHER SERVICES

		New EEL rates are the sum of the individual UNE network elements (interoffice transport and loop [channelization if applicable].									
		NRC-DS3 Local Loop - Add'l	UE3PX	NA	$513.74	$545.54	NA	$502.09	NA	$542.73	NA	$512.23
		NRC-DS3 interoffice channel and DS3 Local Loop Combination - Electronic Svc Orde	SOMEC	NA	$3.17	$3.50	NA	$3.50	NA	$3.50	NA	$3.50
		NRC-DS3 interoffice channel and DS3 Local Loop Combination - Manual Svc Order,	SOMAN	NA	$25.40	NA	NA	NA	NA	NA	NA	$19.99
		NRC-DS3 interoffice channel and DS3 Local Loop Combination - Manual Svc Order -	SOMAN	NA	NA	$37.55	NA	$100.50	NA	$83.19	NA	NA
		NRC-DS3 interoffice channel and DS3 Local Loop Combination - Manual Svc Order -	SOMAN	NA	NA	$37.55	NA	$100.50	NA	$69.01	NA	NA
		NRC-DS3 interoffice channel and DS3 Local Loop Combination - Manual Svc Order -	SOMAN	NA	NA	$18.03	NA	$41.88	NA	NA	NA	NA
		NRC-DS3 interoffice channel and DS3 Local Loop Combination - Manual Svc Order -	SOMAN	NA	NA	$18.03	NA	$41.88	NA	NA	NA	NA
		STS-1 Interoffice Channel and STS-1 Local Loop:										
		Recurring Charges										
		STS-1 Loop per Facility Termination per month	UDLS1	NA	$446.09	$421.59	NA	$497.08	NA	$387.01	NA	$400.21
		STS-1 Loop per mile	1L5ND	NA	$11.77	$8.90	NA	$38.98	NA	$32.53	NA	$30.53
		Interoffice Channel - Dedicated - STS-1 - FacilityTermination per month	U1TFS	NA	$1,105.98	$788.00	NA	$1,101	NA	$800.94	NA	$838.65
		Interoffice Channel - Dedicated - STS-1 - per mile per month	1L5XX	NA	$4.17	$2.72	NA	$14.04	NA	$6.29	NA	$6.88
		Non-Recurring Charges - New EEL (Note 2)(Note 3)										
		NRC- STS-1 interoffice - 1st	U1TFS	NA	$154.30	$633.41	NA	$713.57	NA	$624.86	NA	$961.62
		NRC- STS-1 interoffice - Add'l	U1TFS	NA	$77.50	$449.91	NA	$404.36	NA	$436.36	NA	$625.84
		NRC-STS-1 Local Loop - 1st	UDLS1	NA	$1,020.45	$761.81	NA	$811.30	NA	$964.04	NA	$829.52
		NRC-STS-1 Local Loop - Add'l	UDLS1	NA	$513.74	$545.54	NA	$502.09	NA	$542.73	NA	$512.23
		NRC-STS-1 interoffice channel and STS-1 Local Loop Combination - Electronic Svc O	SOMEC	NA	$3.17	$3.50	NA	$3.50	NA	$3.50	NA	$3.50
		NRC-STS-1 interoffice channel and STS-1 Local Loop Combination - Manual Svc Ord	SOMAN	NA	$25.40	NA	NA	NA	NA	NA	NA	$19.99
		NRC-STS-1 interoffice channel and STS-1 Local Loop Combination - Manual Svc Ord	SOMAN	NA	NA	$37.96	NA	$100.50	NA	$123.62	NA	NA
		NRC-STS-1 interoffice channel and STS-1 Local Loop Combination - Manual Svc Ord	SOMAN	NA	NA	$37.96	NA	$100.50	NA	$84.76	NA	NA
		NRC-STS-1 interoffice channel and STS-1 Local Loop Combination - Manual Svc Ord	SOMAN	NA	NA	$18.23	NA	$41.88	NA	NA	NA	NA
		NRC-STS-1 interoffice channel and STS-1 Local Loop Combination - Manual Svc Ord	SOMAN	NA	NA	$18.23	NA	$41.88	NA	NA	NA	NA
		DS3 Interoffice Channel and DS1 Local Loop:										
		Recurring Charges										
		DS1 Loop per month	USLXX	NA	NA	NA	NA	NA	NA	$62.78	NA	NA

BELLSOUTH/API RATES
NETWORK ELEMENTS
AND OTHER SERVICES

		New EEL rates are the sum of the individual UNE network elements (interoffice transport and loop [channelization if applicable].									
		DS1 Loop per month, Zone 1 (Note 1)	USLXX	NA	$64.69	$52.40	NA	$56.32	NA	TBD	NA	NA
		DS1 Loop per month, Zone 2 (Note 1)	USLXX	NA	$94.71	$60.51	NA	$96.73	NA	TBD	NA	NA
		DS1 Loop per month, Zone 3 (Note 1)	USLXX	NA	$208.93	$96.18	NA	$197.57	NA	TBD	NA	NA
		DS1 Loop per month, Zone 4 (Note 1)	NA	NA	NA	NA	NA	NA	NA	NA	NA	NA
		Interoffice Channel - Dedicated - DS3 - FacilityTermination per month	U1TF3	NA	$1,121.93	$717.60	NA	$1,101	NA	$720.38	NA	NA
		Interoffice Channel - Dedicated - DS3 - per mile per month	1L5XX	NA	$4.17	$6.46	NA	$14.04	NA	$12.98	NA	NA
		DS3 Channelized System per month	MQ3	NA	$220.97	$202.91	NA	$245.84	NA	$226.81	NA	NA
		DS3 Interface per month (DS1 COCI)	UC1D1	NA	$14.40	$0.67	NA	$7.55	NA	$4.61	NA	NA
		Non-Recurring Charges - New EEL (Note 2)(Note 3)										
		NRC- DS3 interoffice - 1st	U1TF3	NA	$627.78	$520.09	NA	$713.57	NA	$794.94	NA	NA
		NRC- DS3 interoffice - Add'l	U1TF3	NA	$377.43	$282.38	NA	$404.36	NA	$579.55	NA	NA
		NRC-DS1 Local Loop - 1st	USLXX	NA	$338.52	$142.64	NA	$502.73	NA	$714.84	NA	NA
		NRC-DS1 Local Loop - Add'l	USLXX	NA	$124.84	$94.87	NA	$293.92	NA	$421.47	NA	NA
		NRC-DS3 Channelization System -1st	MQ3	NA	$404.85	$316.28	NA	$320.72	NA	$351.95	NA	NA
		NRC-DS3 Channelization System - Add'l	MQ3	NA	$168.26	$171.72	NA	$233.10	NA	$243.76	NA	NA
		NRC-DS1(COCI)interface card -1st	UC1D1	NA	$12.16	$12.02	NA	$12.29	NA	$15.76	NA	NA
		NRC-DS1(COCI)interface card -Add'l	UC1D1	NA	$8.77	$8.66	NA	$8.80	NA	$11.28	NA	NA
		NRC-DS3 interoffice channel and DS1 Local Loop Combination - Electronic Svc Orde	SOMEC	NA	$3.17	$3.50	NA	$3.50	NA	$3.50	NA	NA
		NRC-DS3 interoffice channel and DS1 Local Loop Combination - Manual Svc Order,	SOMAN	NA	$25.40	$33.63	NA	NA	NA	NA	NA	NA
		NRC-DS3 interoffice channel and DS1 Local Loop Combination - Manual Svc Order -	SOMAN	NA	NA	NA	NA	$36.28	NA	$118.20	NA	NA
		NRC-DS3 interoffice channel and DS1 Local Loop Combination - Manual Svc Order -	SOMAN	NA	NA	$27.49	NA	$26.20	NA	$104.02	NA	NA
		NRC-DS3 interoffice channel and DS1 Local Loop Combination - Manual Svc Order -	SOMAN	NA	NA	$19.88	NA	$19.47	NA	NA	NA	NA
		NRC-DS3 interoffice channel and DS1 Local Loop Combination - Manual Svc Order -	SOMAN	NA	NA	$11.85	NA	$8.06	NA	NA	NA	NA
		STS-1 Interoffice Channel and DS1 Local Loop:										
		Recurring Charges										
		DS1 Loop per month, Zone 1 (Note 1)	USLXX	NA	$64.69	$52.40	NA	$56.32	NA	TBD	NA	NA
		DS1 Loop per month, Zone 2 (Note 1)	USLXX	NA	$94.71	$60.51	NA	$96.73	NA	TBD	NA	NA
		DS1 Loop per month, Zone 3 (Note 1)	USLXX	NA	$208.93	$96.18	NA	$197.57	NA	TBD	NA	NA
		DS1 Loop per month, Zone 4 (Note 1)	NA	NA	NA	NA	NA	NA	NA	NA	NA	NA
		Interoffice Channel - Dedicated - STS-1 - FacilityTermination per month	U1TFS	NA	$1,105.98	$717.60	NA	$1,101	NA	$387.01	NA	NA
		Interoffice Channel - Dedicated - STS-1 - per mile per month	1L5XX	NA	$4.17	$6.46	NA	$14.04	NA	$32.53	NA	NA
		DS3 Channelized System per month	MQ3	NA	$220.97	$202.91	NA	$245.84	NA	$226.81	NA	NA
		DS3 Interface per month (DS1 COCI)	UC1D1	NA	$14.40	$0.67	NA	$7.55	NA	$4.61	NA	NA
		Non-Recurring Charges - New EEL (Note 2)(Note 3)										
		NRC-DS1 Local Loop - 1st	USLXX	NA	$627.78	$520.09	NA	$502.73	NA	$714.84	NA	NA
		NRC-DS1 Local Loop - Add'l	USLXX	NA	$377.43	$282.38	NA	$293.92	NA	$421.47	NA	NA
		NRC- STS-1 interoffice - 1st	U1TFS	NA	$154.30	$142.64	NA	$713.57	NA	$624.86	NA	NA
		NRC- STS-1 interoffice - Add'l	U1TFS	NA	$77.50	$94.87	NA	$404.36	NA	$436.36	NA	NA
		NRC-DS3 Channelization System -1st	MQ3	NA	$404.85	$316.28	NA	$320.72	NA	$351.95	NA	NA
		NRC-DS3 Channelization System - Add'l	MQ3	NA	$168.26	$171.72	NA	$233.10	NA	$243.76	NA	NA
		NRC-DS1(COCI)interface card -1st	UC1D1	NA	$12.16	$12.02	NA	$12.29	NA	$15.76	NA	NA
		NRC-DS1(COCI)interface card -Add'l	UC1D1	NA	$8.77	$8.66	NA	$8.80	NA	$11.28	NA	NA
		NRC-STS-1 interoffice channel and DS1 Local Loop Combination - Electronic Svc Or	SOMEC	NA	$3.17	$3.50	NA	$3.50	NA	$3.50	NA	NA
		NRC-STS-1 interoffice channel and DS1 Local Loop Combination - Manual Svc Order	SOMAN	NA	$25.40	NA	NA	NA	NA	NA	NA	NA
		NRC-STS-1 interoffice channel and DS1 Local Loop Combination - Manual Svc Order	SOMAN	NA	NA	$33.63	NA	$68.39	NA	$81.94	NA	NA
		NRC-STS-1 interoffice channel and DS1 Local Loop Combination - Manual Svc Order	SOMAN	NA	NA	$27.49	NA	$58.31	NA	$67.76	NA	NA
		NRC-STS-1 interoffice channel and DS1 Local Loop Combination - Manual Svc Order	SOMAN	NA	NA	$19.88	NA	$50.49	NA	NA	NA	NA
		NRC-STS-1 interoffice channel and DS1 Local Loop Combination - Manual Svc Order	SOMAN	NA	NA	$11.85	NA	$29.00	NA	NA	NA	NA
		2-wire VG Interoffice Channel and 2-wire VG Local Loop:										
		Recurring Charges										
		2-wire VG Loop per month, statewide	UEAL2	NA	$20.52	$16.51	NA	$19.35	NA	NA	NA	$18.00
		2-wire VG Loop per month, Zone 1 (Note 1)	UEAL2	NA	TBD	$15.40	NA	$17.65	NA	NA	NA	$15.54
		2-wire VG Loop per month, Zone 2 (Note 1)	UEAL2	NA	TBD	$17.78	NA	$30.32	NA	NA	NA	$19.55

BELLSOUTH/API RATES
NETWORK ELEMENTS
AND OTHER SERVICES

		New EEL rates are the sum of the individual UNE network elements (interoffice transport and loop [channelization if applicable].									
		2-wire VG Loop per month, Zone 3 (Note 1)	UEAL2	NA	TBD	$28.26	NA	$61.93	NA	NA	NA	$28.02
		2-wire VG Loop per month, Zone 4 (Note 1)	NA	NA	NA	NA	NA	NA	NA	NA	NA	NA
		Interoffice Channel - Dedicated - 2-wire VG - FacilityTermination per month	U1TV2	NA	$26.52	$17.07	NA	$19.10	NA	NA	NA	$18.33
		Interoffice Channel - Dedicated - 2-wire VG - per mile per month	1L5XX	NA	$0.01	$0.0222	NA	$0.0384	NA	NA	NA	$0.0173
		Non-Recurring Charges - New EEL (Note 2)(Note 3)										
		NRC- 2-wire VG interoffice - 1st	U1TV2	NA	$112.10	$79.61	NA	$104.23	NA	NA	NA	$83.35
		NRC- 2-wire VG interoffice - Add'l	U1TV2	NA	$67.61	$36.08	NA	$39.91	NA	NA	NA	$20.88
		NRC-2-wire VG Local Loop - 1st	UEAL2	NA	$38.02	$104.17	NA	$128.42	NA	NA	NA	$192.97
		NRC-2-wire VG Local Loop - Add'l	UEAL2	NA	$35.15	$78.10	NA	$93.60	NA	NA	NA	$140.72
		NRC-2-wire VG interoffice channel and 2-wire VG Local Loop Combination - Electroni	SOMEC	NA	$3.17	$3.50	NA	$3.50	NA	NA	NA	$3.50
		NRC-2-wire VG interoffice channel and 2-wire VG Local Loop Combination - Manual S	SOMAN	NA	$25.40	NA	NA	NA	NA	NA	NA	$19.99
		NRC-2-wire VG interoffice channel and 2-wire VG Local Loop Combination - Manual S	SOMAN	NA	NA	$37.88	NA	$36.28	NA	NA	NA	NA
		NRC-2-wire VG interoffice channel and 2-wire VG Local Loop Combination - Manual S	SOMAN	NA	NA	$27.36	NA	$26.20	NA	NA	NA	NA
		NRC-2-wire VG interoffice channel and 2-wire VG Local Loop Combination - Manual S	SOMAN	NA	NA	NA	NA	$19.47	NA	NA	NA	NA
		NRC-2-wire VG interoffice channel and 2-wire VG Local Loop Combination - Manual S	SOMAN	NA	NA	NA	NA	$8.06	NA	NA	NA	NA
		4-wire VG Interoffice Channel and 4-wire VG Local Loop:										
		Recurring Charges										
		4-wire VG Loop per month, Zone 1 (Note 1)	UEAL4	NA	$24.26	NA	NA	NA	NA	NA	NA	NA
		4-wire VG Loop per month, Zone 2 (Note 1)	UEAL4	NA	$35.51	NA	NA	NA	NA	NA	NA	NA
		4-wire VG Loop per month, Zone 3 (Note 1)	UEAL4	NA	$78.35	NA	NA	NA	NA	NA	NA	NA
		4-wire VG Loop per month, Zone 4 (Note 1)	NA	NA	NA	NA	NA	NA	NA	NA	NA	NA
		Interoffice Channel - Dedicated - 4-wire VG - FacilityTermination per month	U1TV4	NA	$23.64	NA	NA	NA	NA	NA	NA	NA
		Interoffice Channel - Dedicated - 4-wire VG - per mile per month	1L5XX	NA	$0.0098	NA	NA	NA	NA	NA	NA	NA
		Non-Recurring Charges - New EEL (Note 2)(Note 3)										
		NRC- 4-wire VG interoffice - 1st	U1TV4	NA	$160.33	NA	NA	NA	NA	NA	NA	NA
		NRC- 4-wire VG interoffice - Add'l	U1TV4	NA	$73.44	NA	NA	NA	NA	NA	NA	NA
		NRC-4-wire VG Local Loop - 1st	UEAL4	NA	$329.76	NA	NA	NA	NA	NA	NA	NA
		NRC-4-wire VG Local Loop - Add'l	UEAL4	NA	$148.55	NA	NA	NA	NA	NA	NA	NA
		NRC-4-wire VG interoffice channel and 4-wire VG Local Loop Combination - Electroni	SOMEC	NA	$3.17	NA	NA	NA	NA	NA	NA	NA
		NRC-4-wire VG interoffice channel and 4-wire VG Local Loop Combination - Manual S	SOMAN	NA	$25.40	NA	NA	NA	NA	NA	NA	NA
		NRC-4-wire VG interoffice channel and 4-wire VG Local Loop Combination - Manual S	SOMAN	NA	NA	NA	NA	NA	NA	NA	NA	NA
		NRC-4-wire VG interoffice channel and 4-wire VG Local Loop Combination - Manual S	SOMAN	NA	NA	NA	NA	NA	NA	NA	NA	NA
		NRC-4-wire VG interoffice channel and 4-wire VG Local Loop Combination - Manual S	SOMAN	NA	NA	NA	NA	NA	NA	NA	NA	NA
		NRC-4-wire VG interoffice channel and 4-wire VG Local Loop Combination - Manual S	SOMAN	NA	NA	NA	NA	NA	NA	NA	NA	NA
		4-wire 56 kbps Interoffice Channel and 4-wire 56kbps Local Loop:										
		Recurring Charges										
		4-wire 56kbps Loop per month, Zone 1 (Note 1)	UDL56	NA	$39.08	$26.44	NA	$24.36	NA	TBD	NA	$15.92
		4-wire 56kbps Loop per month, Zone 2 (Note 1)	UDL56	NA	$57.21	$26.42	NA	$41.85	NA	TBD	NA	$20.79
		4-wire 56kbps Loop per month, Zone 3 (Note 1)	UDL56	NA	$126.22	$46.53	NA	$86.47	NA	TBD	NA	$27.18
		4-wire 56kbps Loop per month, Zone 4 (Note 1)	NA	NA	NA	NA	NA	NA	NA	NA	NA	NA
		Interoffice Channel - Dedicated - 4-wire 56kbps - FacilityTermination per month	U1TD5	NA	$23.64	$16.45	NA	$18.37	NA	$17.40	NA	$17.74
		Interoffice Channel - Dedicated - 4-wire 56kbps - per mile per month	1L5XX	NA	$0.0098	$0.0222	NA	$0.0384	NA	$0.0282	NA	$0.1730
		Non-Recurring Charges - New EEL (Note 2)(Note 3)										
		NRC- 4-wire 56kbps interoffice - 1st	U1TD5	NA	$160.33	$79.61	NA	$104.23	NA	$137.48	NA	$83.35
		NRC- 4-wire 56kbps interoffice - Add'l	U1TD5	NA	$73.44	$36.08	NA	$39.91	NA	$52.58	NA	$20.88
		NRC-4-wire 56kbps Local Loop - 1st	UDL56	NA	$329.76	$348.55	NA	$421.27	NA	$489.04	NA	$643.00
		NRC-4-wire 56kbps Local Loop - Add'l	UDL56	NA	$148.55	$241.20	NA	$274.74	NA	$337.51	NA	$421.28
		NRC-4-wire 56kbps interoffice channel and 4-wire 56kbps Local Loop Combination - E	SOMEC	NA	$3.17	$3.50	NA	$3.50	NA	$3.50	NA	$3.50
		NRC-4-wire 56kbps interoffice channel and 4-wire 56kbps Local Loop Combination - M	SOMAN	NA	$25.40	NA	NA	NA	NA	NA	NA	$19.99
		NRC-4-wire 56kbps interoffice channel and 4-wire 56kbps Local Loop Combination - M	SOMAN	NA	NA	$37.88	NA	$36.28	NA	$65.01	NA	NA
		NRC-4-wire 56kbps interoffice channel and 4-wire 56kbps Local Loop Combination - M	SOMAN	NA	NA	$27.36	NA	$26.20	NA	$50.83	NA	NA
		NRC-4-wire 56kbps interoffice channel and 4-wire 56kbps Local Loop Combination - M	SOMAN	NA	NA	NA	NA	$11.41	NA	NA	NA	NA
		NRC-4-wire 56kbps interoffice channel and 4-wire 56kbps Local Loop Combination - M	SOMAN	NA	NA	NA	NA	NA	NA	NA	NA	NA

BELLSOUTH/API RATES
NETWORK ELEMENTS
AND OTHER SERVICES

New EEL rates are the sum of the individual UNE network elements (interoffice transport and loop [channelization if applicable].										
4-wire 64 kbps Interoffice Channel and 4-wire 64 kbps Local Loop:										
Recurring Charges										
4-wire 64kbps Loop per month, Zone 1 (Note 1)	UDL64	NA	$39.08	$26.44	NA	$27.50	NA	TBD	NA	$36.45
4-wire 64kbps Loop per month, Zone 2 (Note 1)	UDL64	NA	$57.21	$30.53	NA	$47.24	NA	TBD	NA	$45.87
4-wire 64kbps Loop per month, Zone 3 (Note 1)	UDL64	NA	$126.22	$46.53	NA	$96.48	NA	TBD	NA	$65.75
4-wire 64kbps Loop per month, Zone 4 (Note 1)	NA	NA	NA	NA	NA	NA	NA	NA	NA	NA
Interoffice Channel - Dedicated - 4-wire 64kbps - FacilityTermination per month	U1TD6	NA	$19.31	$16.45	NA	$18.37	NA	$17.40	NA	$17.74
Interoffice Channel - Dedicated - 4-wire 64kbps - per mile per month	1L5XX	NA	$0.0098	$0.0222	NA	$0.0384	NA	$0.0282	NA	$0.1730
Non-Recurring Charges - New EEL (Note 2)(Note 3)										
NRC- 4-wire 64kbps interoffice - 1st	U1TD6	NA	$160.33	$79.61	NA	$713.57	NA	$137.48	NA	$729.27
NRC- 4-wire 64kbps interoffice - Add'l	U1TD6	NA	$73.44	$36.08	NA	$404.36	NA	$52.58	NA	$411.98
NRC-4-wire 64kbps Local Loop - 1st	UDL64	NA	$329.76	$348.55	NA	$811.30	NA	$489.04	NA	$829.52
NRC-4-wire 64kbps Local Loop - Add'l	UDL64	NA	$148.55	$241.20	NA	$502.09	NA	$337.51	NA	$512.23
NRC-4-wire 64kbps interoffice channel and 4-wire 64kbps Local Loop Combination - E	SOMEC	NA	$3.17	$3.50	NA	$3.50	NA	$3.50	NA	$3.50
NRC-4-wire 64kbps interoffice channel and 4-wire 64kbps Local Loop Combination - N	SOMAN	NA	$25.40	NA	NA	NA	NA	NA	NA	$19.99
NRC-4-wire 64kbps interoffice channel and 4-wire 64kbps Local Loop Combination - N	SOMAN	NA	NA	$37.55	NA	$100.50	NA	$65.01	NA	NA
NRC-4-wire 64kbps interoffice channel and 4-wire 64kbps Local Loop Combination - N	SOMAN	NA	NA	$37.55	NA	$100.50	NA	$50.83	NA	NA
NRC-4-wire 64kbps interoffice channel and 4-wire 64kbps Local Loop Combination - N	SOMAN	NA	NA	$18.03	NA	$41.88	NA	NA	NA	NA
NRC-4-wire 64kbps interoffice channel and 4-wire 64kbps Local Loop Combination - N	SOMAN	NA	NA	$18.03	NA	$41.88	NA	NA	NA	NA
Network Elements used in Existing Combinations at UNE Rates (Note4)	USOC	AL	FL	GA	KY	LA	MS	NC	SC	TN
Local Loop:										
2-Wire Analog Voice Grade Loop - Service Level 2										
2-Wire Analog Voice Grade Loop - per mile per month	UNCVX	1L5ND	$0.00	$0.00	$0.00	$0.00	$0.00	$0.00	$0.00	$0.00
2-Wire Analog Voice Grade Loop -per month	UEAL2	NA	NA	NA	NA	NA	NA	$19.50	NA	NA
Zone 1	UEAL2	$17.95	$20.52	$15.40	$17.27	$17.65	$18.35	TBD	$16.58	$15.54
Zone 2	UEAL2	$29.16	TBD	$17.78	$32.32	$30.32	$24.33	TBD	$27.59	$19.55
Zone 3	UEAL2	$52.84	TBD	$28.26	$55.78	$61.93	$34.77	TBD	$31.87	$28.02
Zone 4	UEAL2	NA	NA	NA	NA	NA	$45.88	NA	NA	NA
NRC - Ordinarily Combined in GA (Note 5)										
NRC - 1st	UEAL2	NA	NA	$104.17	NA	NA	NA	NA	NA	NA
NRC - Add'l	UEAL2	NA	NA	$78.10	NA	NA	NA	NA	NA	NA
NRC - Disconnect Charge - 1st	UEAL2	NA	NA	NA	NA	NA	NA	NA	NA	NA
NRC - Disconnect Charge - Add'l	UEAL2	NA	NA	NA	NA	NA	NA	NA	NA	NA
NRC - Electronic Svc Order, per LSR	SOMEC	NA	NA	$3.50	NA	NA	NA	NA	NA	NA
NRC - Incremental Charge - Manual Service Order - 1st	SOMAN	NA	NA	$18.94	NA	NA	NA	NA	NA	NA
NRC - Incremental Charge - Manual Service Order - Add'l	SOMAN	NA	NA	$8.42	NA	NA	NA	NA	NA	NA
NRC - Incremental Charge - Manual Service Order - Disconnect	SOMAN	NA	NA	NA	NA	NA	NA	NA	NA	NA
NRC-All Existing Combination "Switch As Is" Conversion Charge (Note 6)										
NRC-2/4-WIRE COMBINATION - "Switch As Is" Conversion Charge - 1st	UNCCC	$54.03	$32.75	$58.43	$54.09	$54.23	$54.09	$54.00	$54.26	$54.13
NRC-2/4-WIRE COMBINATION - "Switch As Is" Conversion Charge - Add'l	UNCCC	$32.11	$32.75	$26.99	$32.16	$32.24	$32.16	$32.10	$32.25	$32.17
NRC- 2/4-WIRE COMBINATION - "Switch As Is" Conversion Charge - Disconnect - 1st	UNCCC	$0.00	$16.77	$12.61	$0.00	$0.00	$0.00	$0.00	$0.00	$0.00
NRC- 2/4-WIRE COMBINATION - "Switch As Is" Conversion Charge - Disconnect - Add'l	UNCCC	$0.00	$16.77	$12.61	$0.00	$0.00	$0.00	$0.00	$0.00	$0.00
2-Wire Analog Voice Grade Loop - Service Level 2 - (reverse battery)										
2-Wire Analog Voice Grade Loop - Loop[Start - per mile per month	1L5ND	$0.00	$0.00	$0.00	$0.00	$0.00	$0.00	$0.00	$0.00	$0.00
2-Wire Analog Voice Grade Loop - Rev Bat - per month	UEAR2	NA	$20.52	NA	NA	NA	NA	$19.50	NA	NA
Zone 1	UEAR2	$17.95	$23.23	$16.84	$17.27	$17.65	$18.35	TBD	$21.57	$15.54
Zone 2	UEAR2	$29.16	$22.43	$19.45	$32.32	$30.32	$24.33	TBD	$32.53	$19.55
Zone 3	UEAR2	$52.84	$27.87	$30.92	$55.78	$61.93	$34.77	TBD	$43.08	$28.02
Zone 4	UEAR2	NA	NA	NA	NA	NA	$45.88	NA	NA	NA
NRC - Ordinarily Combined in GA (Note 5)										
NRC - 1st	UEAR2	NA	NA	$104.17	NA	NA	NA	NA	NA	NA
NRC - Add'l	UEAR2	NA	NA	$78.10	NA	NA	NA	NA	NA	NA

BELLSOUTH/API RATES
NETWORK ELEMENTS
AND OTHER SERVICES

		New EEL rates are the sum of the individual UNE network elements (interoffice transport and loop [channelization if applicable].									
		NRC - Disconnect Charge - 1st	UEAR2	NA	NA	NA	NA	NA	NA	NA	NA	NA
		NRC - Disconnect Charge - Add'l	UEAR2	NA	NA	NA	NA	NA	NA	NA	NA	NA
		NRC - Electronic Svc Order, per LSR	SOMEC	NA	NA	$3.50	NA	NA	NA	NA	NA	NA
		NRC - Incremental Charge - Manual Service Order - 1st	SOMAN	NA	NA	$18.94	NA	NA	NA	NA	NA	NA
		NRC - Incremental Charge - Manual Service Order - Add'l	SOMAN	NA	NA	$8.42	NA	NA	NA	NA	NA	NA
		NRC - Incremental Charge - Manual Service Order - Disconnect	SOMAN	NA	NA	NA	NA	NA	NA	NA	NA	NA
		NRC-All Existing Combination "Switch As Is" Conversion Charge (Note 6)									
		NRC-2/4-WIRE COMBINATION - "Switch As Is" Conversion Charge - 1st	UNCCC	$54.03	$32.75	$58.43	$54.09	$54.23	$54.09	$54.00	$54.26	$54.13
		NRC-2/4-WIRE COMBINATION - "Switch As Is" Conversion Charge - Add'l	UNCCC	$32.11	$32.75	$26.99	$32.16	$32.24	$32.16	$32.10	$32.25	$32.17
		NRC- 2/4-WIRE COMBINATION - "Switch As Is" Conversion Charge - Disconnect - 1st	UNCCC	$0.00	$16.77	$12.61	$0.00	$0.00	$0.00	$0.00	$0.00	$0.00
		NRC- 2/4-WIRE COMBINATION - "Switch As Is" Conversion Charge - Disconnect - Add'l	UNCCC	$0.00	$16.77	$12.61	$0.00	$0.00	$0.00	$0.00	$0.00	$0.00
		4-Wire Analog Voice Grade Loop									
		4-Wire Analog Voice Grade Loop per mile per month	1L5ND	$0.00	$0.00	$0.00	$0.00	$0.00	$0.00	$0.00	$0.00	$0.00
		Zone 1	UEAL4	$24.01	$24.26	$22.88	$20.92	$24.36	$22.38	$23.51	$49.47	$15.54
		Zone 2	UEAL4	$39.00	$35.51	$26.42	$39.14	$41.85	$29.67	$38.53	$44.44	$19.55
		Zone 3	UEAL4	$70.67	$78.35	$41.99	$67.56	$85.47	$42.40	$44.38	$58.85	$28.02
		Zone 4	UEAL4	NA	NA	NA	NA	NA	$55.96	NA	NA	NA
		NRC - Ordinarily Combined in GA (Note 5)									
		NRC - 1st	UEAL4	NA	NA	$206.95	NA	NA	NA	NA	NA	NA
		NRC - Add'l	UEAL4	NA	NA	$170.57	NA	NA	NA	NA	NA	NA
		NRC - Disconnect Charge - 1st	UEAL4	NA	NA	NA	NA	NA	NA	NA	NA	NA
		NRC - Disconnect Charge - Add'l	UEAL4	NA	NA	NA	NA	NA	NA	NA	NA	NA
		NRC - Electronic Svc Order, per LSR	SOMEC	NA	NA	$3.50	NA	NA	NA	NA	NA	NA
		NRC - Incremental Charge - Manual Service Order - 1st	SOMAN	NA	NA	NA	NA	NA	NA	NA	NA	NA
		NRC - Incremental Charge - Manual Service Order - Add'l	SOMAN	NA	NA	$8.42	NA	NA	NA	NA	NA	NA
		NRC - Incremental Charge - Manual Service Order - Disconnect	SOMAN	NA	NA	NA	NA	NA	NA	NA	NA	NA
		NRC-All Existing Combination "Switch As Is" Conversion Charge (Note 6)									
		NRC-2/4-WIRE COMBINATION - "Switch As Is" Conversion Charge - 1st	UNCCC	$54.03	$32.75	$58.43	$54.09	$54.23	$54.09	$54.00	$54.26	$54.13
		NRC-2/4-WIRE COMBINATION - "Switch As Is" Conversion Charge - Add'l	UNCCC	$32.11	$32.75	$26.99	$32.16	$32.24	$32.16	$32.10	$32.25	$32.17
		NRC- 2/4-WIRE COMBINATION - "Switch As Is" Conversion Charge - Disconnect - 1st	UNCCC	$0.00	$16.77	$12.61	$0.00	$0.00	$0.00	$0.00	$0.00	$0.00
		NRC- 2/4-WIRE COMBINATION - "Switch As Is" Conversion Charge - Disconnect - Add'l	UNCCC	$0.00	$16.77	$12.61	$0.00	$0.00	$0.00	$0.00	$0.00	$0.00
		2-Wire ISDN Digital Grade Loop									
		2-Wire ISDN Loop per mile per month	1L5ND	$0.00	$0.00	$0.00	$0.00	$0.00	$0.00	$0.00	$0.00	$0.00
		2-Wire ISDN Digital Grade Loop per month	U1L2X	NA	NA	NA	NA	NA	NA	$24.98	NA	NA
		Zone 1	U1L2X	$23.23	$32.34	$21.89	$23.66	$21.15	$21.86	TBD	$21.40	$15.54
		Zone 2	U1L2X	$37.74	$47.35	$25.27	$44.28	$36.32	$28.97	TBD	$34.91	$19.55
		Zone 3	U1L2X	$68.38	$104.47	$40.17	$76.42	$74.19	$41.40	TBD	$40.17	$28.02
		Zone 4	U1L2X	NA	NA	NA	NA	NA	$54.64	NA	NA	NA
		NRC - Ordinarily Combined in GA (Note 5)									
		NRC - 1st	U1L2X	NA	NA	$233.38	NA	NA	NA	NA	NA	NA
		NRC - Add'l	U1L2X	NA	NA	$180.35	NA	NA	NA	NA	NA	NA
		NRC - Disconnect Dharge - 1st	U1L2X	NA	NA	NA	NA	NA	NA	NA	NA	NA
		NRC - Disconnect Charge - Add'l	U1L2X	NA	NA	NA	NA	NA	NA	NA	NA	NA
		NRC - Electronic Svc Order, per LSR	SOMEC	NA	NA	$3.50	NA	NA	NA	NA	NA	NA
		NRC - Incremental Charge - Manual Service Order - 1st	SOMAN	NA	NA	$18.94	NA	NA	NA	NA	NA	NA
		NRC - Incremental Charge - Manual Service Order - Add'l	SOMAN	NA	NA	$8.42	NA	NA	NA	NA	NA	NA
		NRC - Incremental Charge - Manual Service Order - Disconnect	SOMAN	NA	NA	NA	NA	NA	NA	NA	NA	NA
		NRC-All Existing Combination "Switch As Is" Conversion Charge (Note 6)									
		NRC-2/4-WIRE COMBINATION - "Switch As Is" Conversion Charge - 1st	UNCCC	$54.03	$32.75	$58.43	$54.09	$54.23	$54.09	$54.00	$54.26	$54.13
		NRC-2/4-WIRE COMBINATION - "Switch As Is" Conversion Charge - Add'l	UNCCC	$32.11	$32.75	$26.99	$32.16	$32.24	$32.16	$32.10	$32.25	$32.17
		NRC- 2/4-WIRE COMBINATION - "Switch As Is" Conversion Charge - Disconnect - 1st	UNCCC	$0.00	$16.77	$12.61	$0.00	$0.00	$0.00	$0.00	$0.00	$0.00
		NRC- 2/4-WIRE COMBINATION - "Switch As Is" Conversion Charge - Disconnect - Add'l	UNCCC	$0.00	$16.77	$12.61	$0.00	$0.00	$0.00	$0.00	$0.00	$0.00

BELLSOUTH/API RATES
NETWORK ELEMENTS
AND OTHER SERVICES

New EEL rates are the sum of the individual UNE network elements (interoffice transport and loop [channelization if applicable].										
4-Wire 56 kbps Digital Grade Loop										
4-Wire 56 kbps Digital Grade Loop per mile per month	1L5ND	$0.00	$0.00	$0.00	$0.00	$0.00	$0.00	$0.00	$0.00	$0.00
4-Wire 56 kbps Digital Grade Loop per month	UDL56	NA	NA	NA	NA	NA	NA	$32.67	NA	NA
Zone 1	UDL56	$27.33	$33.90	$26.44	NA	$27.50	$25.61	TBD	$27.94	$36.45
Zone 2	UDL56	$44.40	$44.72	$30.53	NA	$47.25	$33.94	TBD	$45.81	$45.87
Zone 3	UDL56	$80.45	$50.85	$46.53	NA	$96.48	$48.51	TBD	$52.76	$65.75
Zone 4	UDL56	NA	NA	NA	NA	NA	$64.02	NA	NA	NA
NRC - Ordinarily Combined in GA (Note 5)										
NRC - 1st	UDL56	NA	NA	$348.55	NA	NA	NA	NA	NA	NA
NRC - Add'l	UDL56	NA	NA	$241.20	NA	NA	NA	NA	NA	NA
NRC - Disconnect Dharge - 1st	UDL56	NA	NA	NA	NA	NA	NA	NA	NA	NA
NRC - Disconnect Charge - Add'l	UDL56	NA	NA	NA	NA	NA	NA	NA	NA	NA
NRC - Electronic Svc Order, per LSR	SOMEC	NA	NA	$3.50	NA	NA	NA	NA	NA	NA
NRC - Incremental Charge - Manual Service Order - 1st	SOMAN	NA	NA	$18.94	NA	NA	NA	NA	NA	NA
NRC - Incremental Charge - Manual Service Order - Add'l	SOMAN	NA	NA	$8.42	NA	NA	NA	NA	NA	NA
NRC - Incremental Charge - Manual Service Order - Disconnect	SOMAN	NA	NA	NA	NA	NA	NA	NA	NA	NA
NRC-All Existing Combination "Switch As Is" Conversion Charge (Note 6)										
NRC-2/4-WIRE COMBINATION - "Switch As Is" Conversion Charge - 1st	UNCCC	$54.03	$32.75	$58.43	$54.09	$54.23	$54.09	$54.00	$54.26	$54.13
NRC-2/4-WIRE COMBINATION - "Switch As Is" Conversion Charge - Add'l	UNCCC	$32.11	$32.75	$26.99	$32.16	$32.24	$32.16	$32.10	$32.25	$32.17
NRC- 2/4-WIRE COMBINATION - "Switch As Is" Conversion Charge - Disconnect - 1st	UNCCC	$0.00	$16.77	$12.61	$0.00	$0.00	$0.00	$0.00	$0.00	$0.00
NRC- 2/4-WIRE COMBINATION - "Switch As Is" Conversion Charge - Disconnect - Add'l	UNCCC	$0.00	$16.77	$12.61	$0.00	$0.00	$0.00	$0.00	$0.00	$0.00
4-Wire 64 kbps Digital Grade Loop										
4-Wire 64 kbps Digital Grade Loop per mile per month	1L5ND	$0.00	$0.00	$0.00	$0.00	$0.00	$0.00	$0.00	$0.00	$0.00
4-Wire 64 kbps Digital Grade Loop per month	UDL64	NA	NA	NA	NA	NA	NA	$32.67	NA	NA
Zone 1	UDL64	$27.33	$33.90	$26.44	NA	$27.50	$25.61	TBD	$27.94	$36.45
Zone 2	UDL64	$44.40	$44.72	$30.53	NA	$47.25	$33.94	TBD	$45.81	$45.87
Zone 3	UDL64	$80.45	$50.85	$46.53	NA	$96.48	$48.51	TBD	$52.76	$65.75
Zone 4	UDL64	NA	NA	NA	NA	NA	$64.02	NA	NA	NA
NRC - Ordinarily Combined in GA (Note 5)										
NRC - 1st	UDL64	NA	NA	$348.55	NA	NA	NA	NA	NA	NA
NRC - Add'l	UDL64	NA	NA	$241.20	NA	NA	NA	NA	NA	NA
NRC - Disconnect Dharge - 1st	UDL64	NA	NA	NA	NA	NA	NA	NA	NA	NA
NRC - Disconnect Charge - Add'l	UDL64	NA	NA	NA	NA	NA	NA	NA	NA	NA
NRC - Electronic Svc Order, per LSR	SOMEC	NA	NA	$3.50	NA	NA	NA	NA	NA	NA
NRC - Incremental Charge - Manual Service Order - 1st	SOMAN	NA	NA	$18.94	NA	NA	NA	NA	NA	NA
NRC - Incremental Charge - Manual Service Order - Add'l	SOMAN	NA	NA	$8.42	NA	NA	NA	NA	NA	NA
NRC - Incremental Charge - Manual Service Order - Disconnect	SOMAN	NA	NA	NA	NA	NA	NA	NA	NA	NA
NRC-All Existing Combination "Switch As Is" Conversion Charge (Note 6)										
NRC-2/4-WIRE COMBINATION - "Switch As Is" Conversion Charge - 1st	UNCCC	$54.03	$32.75	$58.43	$54.09	$54.23	$54.09	$54.00	$54.26	$54.13
NRC-2/4-WIRE COMBINATION - "Switch As Is" Conversion Charge - Add'l	UNCCC	$32.11	$32.75	$26.99	$32.16	$32.24	$32.16	$32.10	$32.25	$32.17
NRC- 2/4-WIRE COMBINATION - "Switch As Is" Conversion Charge - Disconnect - 1st	UNCCC	$0.00	$16.77	$12.61	$0.00	$0.00	$0.00	$0.00	$0.00	$0.00
NRC- 2/4-WIRE COMBINATION - "Switch As Is" Conversion Charge - Disconnect - Add'l	UNCCC	$0.00	$16.77	$12.61	$0.00	$0.00	$0.00	$0.00	$0.00	$0.00
4-Wire DS1 Digital Loop										
4-Wire DS1 Digital Loop per mile per month	1L5ND	$0.00	$0.00	$0.00	$0.00	$0.00	$0.00	$0.00	$0.00	$0.00
4-Wire DS1 Digital Loop per month	USLXX	NA	NA	NA	NA	NA	NA	$62.78	NA	NA
Zone 1	USLXX	$51.74	$64.69	$52.40	$50.28	$56.32	$50.99	TBD	$53.00	NA
Zone 2	USLXX	$84.05	$94.71	$60.51	$94.06	$96.73	$67.58	TBD	$89.93	NA
Zone 3	USLXX	$152.29	$208.93	$96.18	$162.34	$197.57	$96.58	TBD	$104.30	NA
Zone 4	USLXX	NA	NA	NA	NA	NA	$127.47	NA	NA	NA
NRC - Ordinarily Combined in GA (Note 5)										
NRC - 1st	USLXX	NA	NA	$429.98	NA	NA	NA	NA	NA	NA
NRC - Add'l	USLXX	NA	NA	$268.18	NA	NA	NA	NA	NA	NA
NRC - Disconnect Charge - 1st	USLXX	NA	NA	NA	NA	NA	NA	NA	NA	NA

BELLSOUTH/API RATES
NETWORK ELEMENTS
AND OTHER SERVICES

		New EEL rates are the sum of the individual UNE network elements (interoffice transport and loop [channelization if applicable].									
		NRC - Disconnect Charge - Add'l	USLXX	NA	NA	NA	NA	NA	NA	NA	NA	NA
		NRC - Electronic Svc Order, per LSR	SOMEC	NA	NA	$3.50	NA	NA	NA	NA	NA	NA
		NRC - Incremental Charge - Manual Service Order - 1st	SOMAN	NA	NA	$18.94	NA	NA	NA	NA	NA	NA
		NRC - Incremental Charge - Manual Service Order - Add'l	SOMAN	NA	NA	$8.42	NA	NA	NA	NA	NA	NA
		NRC - Incremental Charge - Manual Service Order - Disconnect	SOMAN	NA	NA	NA	NA	NA	NA	NA	NA	NA
		NRC-All Existing Combination "Switch As Is" Conversion Charge (Note 6)										
		NRC-DS1 COMBINATION - "Switch As Is" Conversion Charge - 1st	UNCCC	$54.03	$32.75	$58.43	$54.09	$54.23	$54.09	$54.00	$54.26	$54.13
		NRC-DS1 COMBINATION - "Switch As Is" Conversion Charge - Add'l	UNCCC	$32.11	$32.75	$26.99	$32.16	$32.24	$32.16	$32.10	$32.25	$32.17
		NRC- DS1 COMBINATION - "Switch As Is" Conversion Charge - Disconnect - 1st	UNCCC	$0.00	$16.77	$12.61	$0.00	$0.00	$0.00	$0.00	$0.00	$0.00
		NRC- DS1 COMBINATION - "Switch As Is" Conversion Charge - Disconnect - Add'l	UNCCC	$0.00	$16.77	$12.61	$0.00	$0.00	$0.00	$0.00	$0.00	$0.00
		DS3 Local Loop										
		per mile per month	1L5ND	$10.85	$11.77	$8.90	$43.69	$38.98	$54.39	$32.53	$15.53	$30.53
		facitility termination per month	UE3PX	$419.65	$404.58	$390.34	$436.95	$497.08	$427.81	$387.01	$421.60	$400.21
		NRC - Ordinarily Combined in GA (Note 5)										
		NRC - Facility Termination - 1st	UE3PX	NA	NA	$639.50	NA	NA	NA	NA	NA	NA
		NRC - Facility Termination - Add'l	UE3PX	NA	NA	$426.40	NA	NA	NA	NA	NA	NA
		NRC - Facility Termination - Disconnect - 1st	UE3PX	NA	NA	$122.31	NA	NA	NA	NA	NA	NA
		NRC - Facility Termination - Disconnect - Add'l	UE3PX	NA	NA	$119.14	NA	NA	NA	NA	NA	NA
		NRC - Manual Svc Order, per LSR	SOMAN	NA	NA	NA	NA	NA	NA	NA	NA	NA
		NRC - Manual Svc Order, per LSR disconnect	SOMAN	NA	NA	NA	NA	NA	NA	NA	NA	NA
		NRC - Electronic Svc Order, per LSR	SOMEC	NA	NA	$3.50	NA	NA	NA	NA	NA	NA
		NRC - Electronic Svc Order, per LSR disconnect	SOMEC	NA	NA	NA	NA	NA	NA	NA	NA	NA
		NRC - Incremental Charge--Manual Svc Order - 1st	SOMAN	NA	NA	$37.55	NA	NA	NA	NA	NA	NA
		NRC - Incremental Charge--Manual Svc Order - Add'l	SOMAN	NA	NA	$37.55	NA	NA	NA	NA	NA	NA
		NRC - Incremental Cost - Manual Svc. Order vs. Elect-Disconnect-1st	SOMAN	NA	NA	$18.03	NA	NA	NA	NA	NA	NA
		NRC - Incremental Cost - Manual Svc. Order vs. Elect-Disconnect-Add'l	SOMAN	NA	NA	$18.03	NA	NA	NA	NA	NA	NA
		NRC-All Existing Combination "Switch As Is" Conversion Charge (Note 6)										
		NRC-DS3 COMBINATION - "Switch As Is" Conversion Charge - 1st	UNCCC	$54.03	$32.75	$58.43	$54.09	$54.23	$54.09	$54.00	$54.26	$54.13
		NRC-DS3 COMBINATION - "Switch As Is" Conversion Charge - Add'l	UNCCC	$32.11	$32.75	$26.99	$32.16	$32.24	$32.16	$32.10	$32.25	$32.17
		NRC- DS3 COMBINATION - "Switch As Is" Conversion Charge - Disconnect - 1st	UNCCC	$0.00	$16.77	$12.61	$0.00	$0.00	$0.00	$0.00	$0.00	$0.00
		NRC- DS3 COMBINATION - "Switch As Is" Conversion Charge - Disconnect - Add'l	UNCCC	$0.00	$16.77	$12.61	$0.00	$0.00	$0.00	$0.00	$0.00	$0.00
		STS-1 Local Loop										
		per mile per month	1L5ND	$10.85	$11.77	$8.90	$43.69	$38.98	$54.39	$32.53	$15.53	$30.53
		facitility termination per month	UDLS1	$419.65	$446.09	$421.59	$436.95	$497.08	$427.81	$387.01	$431.32	$400.21
		NRC - Ordinarily Combined in GA (Note 5)										
		NRC - STS-1 - Facility Termination - 1st	UDLS1	NA	NA	$639.50	NA	NA	NA	NA	NA	NA
		NRC - STS-1 - Facility Termination - Add'l	UDLS1	NA	NA	$426.40	NA	NA	NA	NA	NA	NA
		NRC - STS-1 - Facility Termination - Disconnect - 1st	UDLS1	NA	NA	$122.31	NA	NA	NA	NA	NA	NA
		NRC - STS-1 - Facility Termination - Disconnect - Add'l	UDLS1	NA	NA	$119.14	NA	NA	NA	NA	NA	NA
		NRC - Manual Svc Order, per LSR	SOMAN	NA	NA	NA	NA	NA	NA	NA	NA	NA
		NRC - Manual Svc Order, per LSR disconnect	SOMAN	NA	NA	NA	NA	NA	NA	NA	NA	NA
		NRC - Electronic Svc Order, per LSR	SOMEC	NA	NA	$3.50	NA	NA	NA	NA	NA	NA
		NRC - Electronic Svc Order, per LSR disconnect	SOMEC	NA	NA	NA	NA	NA	NA	NA	NA	NA
		NRC - STS-1 - Incremental Charge--Manual Svc Order - 1st	SOMAN	NA	NA	$37.55	NA	NA	NA	NA	NA	NA
		NRC - STS-1 - Incremental Charge--Manual Svc Order - Add'l	SOMAN	NA	NA	$37.55	NA	NA	NA	NA	NA	NA
		NRC - STS-1 - Incremental Cost - Manual Svc. Order vs. Elect-Disconnect-1st	SOMAN	NA	NA	$18.03	NA	NA	NA	NA	NA	NA
		NRC - STS-1 - Incremental Cost - Manual Svc. Order vs. Elect-Disconnect-Add	SOMAN	NA	NA	$18.03	NA	NA	NA	NA	NA	NA
		NRC-All Existing Combination "Switch As Is" Conversion Charge (Note 6)										
		NRC-STS-1 COMBINATION - "Switch As Is" Conversion Charge - 1st	UNCCC	$54.03	$32.75	$58.43	$54.09	$54.23	$54.09	$54.00	$54.26	$54.13
		NRC-STS-1 COMBINATION - "Switch As Is" Conversion Charge - Add'l	UNCCC	$32.11	$32.75	$26.99	$32.16	$32.24	$32.16	$32.10	$32.25	$32.17
		NRC- STS-1 COMBINATION - "Switch As Is" Conversion Charge - Disconnect - 1st	UNCCC	$0.00	$16.77	$12.61	$0.00	$0.00	$0.00	$0.00	$0.00	$0.00
		NRC- STS-1 COMBINATION - "Switch As Is" Conversion Charge - Disconnect - Add'l	UNCCC	$0.00	$16.77	$12.61	$0.00	$0.00	$0.00	$0.00	$0.00	$0.00

BELLSOUTH/API RATES
NETWORK ELEMENTS
AND OTHER SERVICES

New EEL rates are the sum of the individual UNE network elements (interoffice transport and loop [channelization if applicable].										
OC-3 Local Loop										
per mile per month	1L5ND	$7.09	$8.93	$6.75	$33.15	$29.58	$41.27	$24.69	$11.78	$23.16
facility termiantion per month		$1,123	$648.60	$630.21	$436.95	$753.65	$689.68	$611.36	$701.71	$620.20
NRC - Ordinarily Combined in GA (Note 5)										
NRC - OC3 - Facility Termination - 1st		NA	NA	$947.69	NA	NA	NA	NA	NA	NA
NRC - OC3 - Facility Termination - Add'l		NA	NA	$413.00	NA	NA	NA	NA	NA	NA
NRC - OC3 - Facility Termination - Disconnect - 1st		NA	NA	$122.31	NA	NA	NA	NA	NA	NA
NRC - OC3 - Facility Termination - Disconnect - Add'l		NA	NA	$119.14	NA	NA	NA	NA	NA	NA
NRC - Electronic Svc Order, per LSR	SOMEC	NA	NA	$3.50	NA	NA	NA	NA	NA	NA
NRC - OC3 - Incremental Charge--Manual Svc Order - 1st	SOMAN	NA	NA	$37.55	NA	NA	NA	NA	NA	NA
NRC - OC3 - Incremental Charge--Manual Svc Order - Add'l	SOMAN	NA	NA	$37.55	NA	NA	NA	NA	NA	NA
NRC - OC3 -Incremental Cost - Manual Svc. Order vs. Elect-Disconnect-1st	SOMAN	NA	NA	$18.03	NA	NA	NA	NA	NA	NA
NRC - OC3 -Incremental Cost - Manual Svc. Order vs. Elect-Disconnect-Add'l	SOMAN	NA	NA	$18.03	NA	NA	NA	NA	NA	NA
NRC-All Existing Combination "Switch As Is" Conversion Charge (Note 6)										
NRC-OC-3 COMBINATION - "Switch As Is" Conversion Charge - 1st	UNCCC	$54.03	$32.75	$58.43	$54.09	$54.23	$54.09	$54.00	$54.26	$54.13
NRC-OC-3 COMBINATION - "Switch As Is" Conversion Charge - Add'l	UNCCC	$32.11	$32.75	$26.99	$32.16	$32.24	$32.16	$32.10	$32.25	$32.17
NRC- OC-3 COMBINATION - "Switch As Is" Conversion Charge - Disconnect - 1st	UNCCC	$0.00	$16.77	$12.61	$0.00	$0.00	$0.00	$0.00	$0.00	$0.00
NRC- OC-3 COMBINATION - "Switch As Is" Conversion Charge - Disconnect - Add'l	UNCCC	$0.00	$16.77	$12.61	$0.00	$0.00	$0.00	$0.00	$0.00	$0.00
OC-12 Local Loop										
per mile per month	1L5ND	$10.13	$11.18	$8.31	$40.80	$36.40	$50.79	$30.38	$14.50	$28.51
facility termination per month		$5,630	$2,068	$2,109.00	$2,457	$2,571	$2,371	$2,122	$2,663	$2,079
NRC - Ordinarily Combined in GA (Note 5)										
NRC - OC12 - Facility Termination - 1st		NA	NA	$1,162.00	NA	NA	NA	NA	NA	NA
NRC - OC12 - Facility Termination - Add'l		NA	NA	$413.00	NA	NA	NA	NA	NA	NA
NRC - OC12 - Facility Termination - Disconnect - 1st		NA	NA	$122.31	NA	NA	NA	NA	NA	NA
NRC - OC12 - Facility Termination - Disconnect - Add'l		NA	NA	$119.14	NA	NA	NA	NA	NA	NA
NRC - Electronic Svc Order, per LSR	SOMEC	NA	NA	$3.50	NA	NA	NA	NA	NA	NA
NRC -OC12 - Incremental Charge - Manual Svc Order - 1st	SOMAN	NA	NA	$37.55	NA	NA	NA	NA	NA	NA
NRC - OC12 - Incremental Charge - Manual Svc Order - Add'l	SOMAN	NA	NA	$37.55	NA	NA	NA	NA	NA	NA
NRC - OC12 - Incremental Cost-Manual Svc. Order vs. Elect-Disconnect-1st	SOMAN	NA	NA	$18.03	NA	NA	NA	NA	NA	NA
NRC - OC12 - Incremental Cost-Manual Svc. Order vs. Elect-Disconnect-Add'l	SOMAN	NA	NA	$18.03	NA	NA	NA	NA	NA	NA
NRC-All Existing Combination "Switch As Is" Conversion Charge (Note 6)										
NRC-OC-12 COMBINATION - "Switch As Is" Conversion Charge - 1st	UNCCC	$54.03	$32.75	$58.43	$54.09	$54.23	$54.09	$54.00	$54.26	$54.13
NRC-OC-12 COMBINATION - "Switch As Is" Conversion Charge - Add'l	UNCCC	$32.11	$32.75	$26.99	$32.16	$32.24	$32.16	$32.10	$32.25	$32.17
NRC- OC-12 COMBINATION - "Switch As Is" Conversion Charge - Disconnect - 1st	UNCCC	$0.00	$16.77	$12.61	$0.00	$0.00	$0.00	$0.00	$0.00	$0.00
NRC- OC-12 COMBINATION - "Switch As Is" Conversion Charge - Disconnect - Add'l	UNCCC	$0.00	$16.77	$12.61	$0.00	$0.00	$0.00	$0.00	$0.00	$0.00
OC-48 Local Loop										
per mile per month	1L5ND	$33.22	$36.67	$27.25	$166.59	$119.40	$166.59	$120.02	$47.57	$93.50
facility termination per month		$1,947	$1,699	$1,598.00	$2,129	$2,268	$1,753	$1,677	$1,733	$1,832
OC-12 Interface on OC-48 Loop per month		$699.62	$592.09	$594.80	$725.77	$723.29	$667.00	$582.66	$773.40	$570.54
NRC - Ordinarily Combined in GA (Note 5)										
NRC - OC48 - Facility Termination - 1st		NA	NA	$1,162.00	NA	NA	NA	NA	NA	NA
NRC - OC48 - Facility Termination - Add'l		NA	NA	$413.00	NA	NA	NA	NA	NA	NA
NRC - OC48 - Interface OC12 on OC48 - 1st		NA	NA	$539.36	NA	NA	NA	NA	NA	NA
NRC - OC48 - Interface OC12 on OC48 - Add'l		NA	NA	$317.38	NA	NA	NA	NA	NA	NA
NRC - OC48 - Facility Termination - Disconnect - 1st		NA	NA	$122.31	NA	NA	NA	NA	NA	NA
NRC - OC48 - Facility Termination - Disconnect - Add'l		NA	NA	$119.14	NA	NA	NA	NA	NA	NA
NRC - OC48- Interface OC12 on OC48 - Disconnect - 1st		NA	NA	$122.31	NA	NA	NA	NA	NA	NA
NRC - OC48 - Interface OC12 on OC48 - Disconnect - Add'l		NA	NA	$119.14	NA	NA	NA	NA	NA	NA
NRC - Electronic Svc Order, per LSR	SOMEC	NA	NA	$3.50	NA	NA	NA	NA	NA	NA
NRC - OC48 - Facility Termination-Manual Svc Order vs Electronic-Disconnect-1	SOMAN	NA	NA	$37.55	NA	NA	NA	NA	NA	NA
NRC - OC48 - Facility Termination-Manual Svc Order vs Electronic-Disconnect-A	SOMAN	NA	NA	$37.55	NA	NA	NA	NA	NA	NA
NRC - OC48 - Interface - Manual Svc Order vs Electronic-Disconnect-1st	SOMAN	NA	NA	$37.55	NA	NA	NA	NA	NA	NA

BELLSOUTH/API RATES
NETWORK ELEMENTS
AND OTHER SERVICES

New EEL rates are the sum of the individual UNE network elements (interoffice transport and loop [channelization if applicable].										
NRC - OC48 - Interface - Manual Svc Order vs Electronic-Disconnect-Add'l	SOMAN	NA	NA	$37.55	NA	NA	NA	NA	NA	NA
NRC - OC-48 - Incremental Charge--Manual Svc Order-1st	SOMAN	NA	NA	$18.03	NA	NA	NA	NA	NA	NA
NRC - OC-48 - Incremental Charge--Manual Svc Order-Add'l	SOMAN	NA	NA	$18.03	NA	NA	NA	NA	NA	NA
NRC - OC48 - Interface OC12 on OC48 - Incremental Charge--Manual Svc Ord	SOMAN	NA	NA	$18.03	NA	NA	NA	NA	NA	NA
NRC - OC48 - Interface OC12 on OC48 - Incremental Charge--Manual Svc Ord	SOMAN	NA	NA	$18.03	NA	NA	NA	NA	NA	NA
NRC-All Existing Combination "Switch As Is" Conversion Charge (Note 6)										
NRC-OC-48 COMBINATION - "Switch As Is" Conversion Charge - 1st	UNCCC	$54.03	$32.75	$58.43	$54.09	$54.23	$54.09	$54.00	$54.26	$54.13
NRC-OC-48 COMBINATION - "Switch As Is" Conversion Charge - Add'l	UNCCC	$32.11	$32.75	$26.99	$32.16	$32.24	$32.16	$32.10	$32.25	$32.17
NRC- OC-48 COMBINATION - "Switch As Is" Conversion Charge - Disconnect - 1st	UNCCC	$0.00	$16.77	$12.61	$0.00	$0.00	$0.00	$0.00	$0.00	$0.00
NRC- OC-48 COMBINATION - "Switch As Is" Conversion Charge - Disconnect - Add'l	UNCCC	$0.00	$16.77	$12.61	$0.00	$0.00	$0.00	$0.00	$0.00	$0.00
Local Channels:										
Local Channel - Dedicated - 2-Wire VG										
Monthly Recurring per month	ULDV2	$14.61	$29.33	$13.91	$22.26	$14.94	$17.83	$14.83	$16.83	$19.02
Monthly Recurring per mile per month	1L5NC	$0.00	$0.00	$0.00	$0.00	$0.00	$0.00	$0.00	$0.00	$0.00
NRC - Ordinarily Combined in GA (Note 5)										
NRC - 2-wire VG Local Channel - 1st	ULDV2	NA	NA	$245.43	NA	NA	NA	NA	NA	NA
NRC - 2-wire VG Local Channel -Add'l	ULDV2	NA	NA	$33.90	NA	NA	NA	NA	NA	NA
NRC - Electronic Svc Order, per LSR	SOMEC	NA	NA	$3.50	NA	NA	NA	NA	NA	NA
NRC - 2-Wire VG - Incremental Charge--Manual Svc Order - 1st	SOMAN	NA	NA	$33.63	NA	NA	NA	NA	NA	NA
NRC - 2-Wire VG - Incremental Charge--Manual Svc Order - Add'l	SOMAN	NA	NA	$27.49	NA	NA	NA	NA	NA	NA
NRC - 2-Wire VG - Incremental Charge--Manual Svc Order - Disconnect - 1st	SOMAN	NA	NA	$22.24	NA	NA	NA	NA	NA	NA
NRC - 2-Wire VG - Incremental Charge--Manual Svc Order - Disconnect - Add'l	SOMAN	NA	NA	$8.08	NA	NA	NA	NA	NA	NA
NRC-All Existing Combination "Switch As Is" Conversion Charge (Note 6)										
NRC-2/4-WIRE COMBINATION - "Switch As Is" Conversion Charge - 1st	UNCCC	$54.03	$32.75	$58.43	$54.09	$54.23	$54.09	$54.00	$54.26	$54.13
NRC-2/4-WIRE COMBINATION - "Switch As Is" Conversion Charge - Add'l	UNCCC	$32.11	$32.75	$26.99	$32.16	$32.24	$32.16	$32.10	$32.25	$32.17
NRC- 2/4-WIRE COMBINATION - "Switch As Is" Conversion Charge - Disconnect - 1st	UNCCC	$0.00	$16.77	$12.61	$0.00	$0.00	$0.00	$0.00	$0.00	$0.00
NRC- 2/4-WIRE COMBINATION - "Switch As Is" Conversion Charge - Disconnect - Add'l	UNCCC	$0.00	$16.77	$12.61	$0.00	$0.00	$0.00	$0.00	$0.00	$0.00
Local Channel - Dedicated - 2-Wire VG - Rev Bat.										
Monthly Recurring per month	ULDR2	$14.61	$26.31	$13.91	$22.26	$14.94	$17.83	$14.82	$16.83	$19.02
Monthly Recurring per mile per month	1L5NC	$0.00	$0.00	$0.00	$0.00	$0.00	$0.00	$0.00	$0.00	$0.00
NRC - Ordinarily Combined in GA (Note 5)										
NRC - 2-wire VG Local Channel - 1st	ULDR2	NA	NA	$245.43	NA	NA	NA	NA	NA	NA
NRC - 2-wire VG Local Channel -Add'l	ULDR2	NA	NA	$33.90	NA	NA	NA	NA	NA	NA
NRC - Electronic Svc Order, per LSR	SOMEC	NA	NA	$3.50	NA	NA	NA	NA	NA	NA
NRC - 2-Wire VG - Incremental Charge--Manual Svc Order - 1st	SOMAN	NA	NA	$33.63	NA	NA	NA	NA	NA	NA
NRC - 2-Wire VG - Incremental Charge--Manual Svc Order - Add'l	SOMAN	NA	NA	$27.49	NA	NA	NA	NA	NA	NA
NRC - 2-Wire VG - Incremental Charge--Manual Svc Order - Disconnect - 1st	SOMAN	NA	NA	$22.24	NA	NA	NA	NA	NA	NA
NRC - 2-Wire VG - Incremental Charge--Manual Svc Order - Disconnect - Add'l	SOMAN	NA	NA	$8.08	NA	NA	NA	NA	NA	NA
NRC-All Existing Combination "Switch As Is" Conversion Charge (Note 6)										
NRC-2/4-WIRE COMBINATION - "Switch As Is" Conversion Charge - 1st	UNCCC	$54.03	$32.75	$58.43	$54.09	$54.23	$54.09	$54.00	$54.26	$54.13
NRC-2/4-WIRE COMBINATION - "Switch As Is" Conversion Charge - Add'l	UNCCC	$32.11	$32.75	$26.99	$32.16	$32.24	$32.16	$32.10	$32.25	$32.17
NRC- 2/4-WIRE COMBINATION - "Switch As Is" Conversion Charge - Disconnect - 1st	UNCCC	$0.00	$16.77	$12.61	$0.00	$0.00	$0.00	$0.00	$0.00	$0.00
NRC- 2/4-WIRE COMBINATION - "Switch As Is" Conversion Charge - Disconnect - Add'l	UNCCC	$0.00	$16.77	$12.61	$0.00	$0.00	$0.00	$0.00	$0.00	$0.00
Local Channel - Dedicated - 4-Wire VG										
Monthly Recurring per month	ULDV4	$15.77	$30.50	$14.99	$23.38	$16.21	$19.03	$15.87	$18.05	$20.14
Monthly Recurring per mile per month	1L5NC	$0.00	$0.00	$0.00	$0.00	$0.00	$0.00	$0.00	$0.00	$0.00
NRC - Ordinarily Combined in GA (Note 5)										
NRC-4-wire VG Local Channel - 1st	ULDV4	NA	NA	$245.43	NA	NA	NA	NA	NA	NA
NRC-4-wire VG Local Channel - Add'l	ULDV4	NA	NA	$33.90	NA	NA	NA	NA	NA	NA
NRC - Electronic Svc Order, per LSR	SOMEC	NA	NA	$3.50	NA	NA	NA	NA	NA	NA
NRC - 4-Wire VG Local Channel - Incremental Charge--Manual Svc Order - 1st	SOMAN	NA	NA	$33.63	NA	NA	NA	NA	NA	NA
NRC - 4-Wire VG Local Channel - Incremental Charge--Manual Svc Order - Add'l	SOMAN	NA	NA	$27.49	NA	NA	NA	NA	NA	NA

BELLSOUTH/API RATES
NETWORK ELEMENTS
AND OTHER SERVICES

New EEL rates are the sum of the individual UNE network elements (interoffice transport and loop [channelization if applicable].										
NRC - 4-Wire VG Local Channel - Incremental Charge--Manual Svc Order - Disconne	SOMAN	NA	NA	$22.24	NA	NA	NA	NA	NA	NA
NRC - 4-Wire VG Local Channel - Incremental Charge--Manual Svc Order - Disconne	SOMAN	NA	NA	$8.08	NA	NA	NA	NA	NA	NA
NRC-All Existing Combination "Switch As Is" Conversion Charge (Note 6)										
NRC-2/4-WIRE COMBINATION - "Switch As Is" Conversion Charge - 1st	UNCCC	$54.03	$32.75	$58.43	$54.09	$54.23	$54.09	$54.00	$54.26	$54.13
NRC-2/4-WIRE COMBINATION - "Switch As Is" Conversion Charge - Add'l	UNCCC	$32.11	$32.75	$26.99	$32.16	$32.24	$32.16	$32.10	$32.25	$32.17
NRC- 2/4-WIRE COMBINATION - "Switch As Is" Conversion Charge - Disconnect - 1st	UNCCC	$0.00	$16.77	$12.61	$0.00	$0.00	$0.00	$0.00	$0.00	$0.00
NRC- 2/4-WIRE COMBINATION - "Switch As Is" Conversion Charge - Disconnect - Add'l	UNCCC	$0.00	$16.77	$12.61	$0.00	$0.00	$0.00	$0.00	$0.00	$0.00
Local Channel - Dedicated - DS1										
DS1 Monthly Recurring per month	ULDF1	$35.52	$43.53	$38.36	$43.80	$43.80	$38.91	$35.68	$37.20	$40.27
Monthly Recurring per mile per month	1L5NC	$0.00	$0.00	$0.00	$0.00	$0.00	$0.00	$0.00	$0.00	$0.00
NRC - Ordinarily Combined in GA (Note 5)										
NRC - DS1 Local Channel - 1st	ULDF1	NA	NA	$166.88	NA	NA	NA	NA	NA	NA
NRC - DS1 Local Channel - Add'l	ULDF1	NA	NA	$84.14	NA	NA	NA	NA	NA	NA
NRC - Electronic Svc Order, per LSR	SOMEC	NA	NA	$3.50	NA	NA	NA	NA	NA	NA
NRC - DS1 Local Channel - Incremental Charge--Manual Svc Order - 1st	SOMAN	NA	NA	$65.60	NA	NA	NA	NA	NA	NA
NRC - DS1 Local Channel - Incremental Charge--Manual Svc Order - Add'l	SOMAN	NA	NA	$33.53	NA	NA	NA	NA	NA	NA
NRC - DS1 Local Channel - Incremental Charge--Manual Svc Order - Disconnect - 1s	SOMAN	NA	NA	$35.76	NA	NA	NA	NA	NA	NA
NRC - DS1 Local Channel - Incremental Charge--Manual Svc Order - Disconnec - Ad	SOMAN	NA	NA	$14.05	NA	NA	NA	NA	NA	NA
NRC-All Existing Combination "Switch As Is" Conversion Charge (Note 6)										
NRC-DS1 COMBINATION - "Switch As Is" Conversion Charge - 1st	UNCCC	$54.03	$32.75	$58.43	$54.09	$54.23	$54.09	$54.00	$54.26	$54.13
NRC-DS1 COMBINATION - "Switch As Is" Conversion Charge - Add'l	UNCCC	$32.11	$32.75	$26.99	$32.16	$32.24	$32.16	$32.10	$32.25	$32.17
NRC- DS1 COMBINATION - "Switch As Is" Conversion Charge - Disconnect - 1st	UNCCC	$0.00	$16.77	$12.61	$0.00	$0.00	$0.00	$0.00	$0.00	$0.00
NRC- DS1 COMBINATION - "Switch As Is" Conversion Charge - Disconnect - Add'l	UNCCC	$0.00	$16.77	$12.61	$0.00	$0.00	$0.00	$0.00	$0.00	$0.00
Local Channel - Dedicated - DS3	USOC	AL	FL	GA	KY	LA	MS	NC	SC	TN
DS3 Local Channel - per mile per month	1L5NC	$8.44	$9.32	$6.92	$34.00	$30.34	NA	NA	$12.08	$23.76
DS3 Local Channel - Facility Termination per month	ULDF3	$535.92	$556.27	$515.91	$635.09	$669.01	$533.33	$498.87	$493.31	$607.28
NRC - Ordinarily Combined in GA (Note 5)										
NRC - DS3 Local Channel Facility Termination - 1st	ULDF3	NA	NA	$639.50	NA	NA	NA	NA	NA	NA
NRC - DS3 Local Channel - Facility Termination - Add'l	ULDF3	NA	NA	$426.40	NA	NA	NA	NA	NA	NA
NRC - Electronic Svc Order, per LSR	SOMEC	NA	NA	$3.50	NA	NA	NA	NA	NA	NA
NRC - DS3 Local Channel - Incremental Charge--Manual Svc Order - 1st	SOMAN	NA	NA	$37.55	NA	NA	NA	NA	NA	NA
NRC - DS3 Local Channel - Incremental Charge--Manual Svc Order - Add'l	SOMAN	NA	NA	$37.55	NA	NA	NA	NA	NA	NA
NRC - DS3 Local Channel - Incremental Charge--Manual Svc Order - Disconnect - 1s	SOMAN	NA	NA	$18.03	NA	NA	NA	NA	NA	NA
NRC - DS3 Local Channel - Incremental Charge--Manual Svc Order - Disconnec - Ad	SOMAN	NA	NA	$18.03	NA	NA	NA	NA	NA	NA
NRC-All Existing Combination "Switch As Is" Conversion Charge (Note 6)										
NRC-DS3 COMBINATION - "Switch As Is" Conversion Charge - 1st	UNCCC	$54.03	$32.75	$71.04	$54.09	$54.23	$54.09	$54.00	$54.26	$54.13
NRC-DS3 COMBINATION - "Switch As Is" Conversion Charge - Add'l	UNCCC	$32.11	$32.75	$39.60	$32.16	$32.24	$32.16	$32.10	$32.25	$32.17
NRC- DS3 COMBINATION - "Switch As Is" Conversion Charge - Disconnect - 1st	UNCCC	$0.00	$16.77	$0.00	$0.00	$0.00	$0.00	$0.00	$0.00	$0.00
NRC- DS3 COMBINATION - "Switch As Is" Conversion Charge - Disconnect - Add'l	UNCCC	$0.00	$16.77	$0.00	$0.00	$0.00	$0.00	$0.00	$0.00	$0.00
Local Channel - Dedicated - STS-1										
STS-1 Local Channel - per mile per month	1L5NC	$8.44	$9.32	$6.92	$34.00	$8.77	$38.98	NA	$12.08	$25.11
STS-1 Local Channel - Facility Termination per month	ULDFS	$525.40	$569.67	$517.56	$635.09	$558.00	$531.39	$512.00	$481.14	$615.65
NRC - Ordinarily Combined in GA (Note 5)										
NRC - STS-1 Local Channel Facility Termination - 1st	ULDFS	NA	NA	$761.81	NA	NA	NA	NA	NA	NA
NRC - STS-1 Local Channel - Facility Termination - Add'l	ULDFS	NA	NA	$545.54	NA	NA	NA	NA	NA	NA
NRC - Electronic Svc Order, per LSR	SOMEC	NA	NA	$3.50	NA	NA	NA	NA	NA	NA
NRC - STS-1 Local Channel - Incremental Charge--Manual Svc Order - 1st	SOMAN	NA	NA	$37.55	NA	NA	NA	NA	NA	NA
NRC - STS-1 Local Channel - Incremental Charge--Manual Svc Order - Add'l	SOMAN	NA	NA	$37.55	NA	NA	NA	NA	NA	NA
NRC - STS-1 Local Channel - Incremental Charge--Manual Svc Order - Disconnect -	SOMAN	NA	NA	$18.03	NA	NA	NA	NA	NA	NA
NRC - STS-1 Local Channel - Incremental Charge--Manual Svc Order - Disconnec - A	SOMAN	NA	NA	$18.03	NA	NA	NA	NA	NA	NA
NRC-All Existing Combination "Switch As Is" Conversion Charge (Note 6)										
NRC-STS-1 COMBINATION - "Switch As Is" Conversion Charge - 1st	UNCCC	$54.03	$32.75	$58.43	$54.09	$54.23	$54.09	$54.00	$54.26	$54.13

BELLSOUTH/API RATES
NETWORK ELEMENTS
AND OTHER SERVICES

New EEL rates are the sum of the individual UNE network elements (interoffice transport and loop [channelization if applicable].										
NRC-STS-1 COMBINATION - "Switch As Is" Conversion Charge - Add'l	UNCCC	$32.11	$32.75	$26.99	$32.16	$32.24	$32.16	$32.10	$32.25	$32.17
NRC- STS-1 COMBINATION - "Switch As Is" Conversion Charge - Disconnect - 1st	UNCCC	$0.00	$16.77	$12.61	$0.00	$0.00	$0.00	$0.00	$0.00	$0.00
NRC- STS-1 COMBINATION - "Switch As Is" Conversion Charge - Disconnect - Add'l	UNCCC	$0.00	$16.77	$12.61	$0.00	$0.00	$0.00	$0.00	$0.00	$0.00
Local Channel - OC3										
Local Channel - OC3 - per Mile	1L5NC	$8.23	$7.83	$6.75	$33.15	$29.58	$41.27	$24.69	$11.78	$23.16
Local Channel - OC3 - per Facility Termination	TBA	$691.33	$940.35	$630.21	$713.29	$753.65	$689.68	$611.36	$701.71	$620.20
NRC - Ordinarily Combined in GA (Note 5)										
NRC - OC3 - Facility Termination - 1st	TBA	NA	NA	$947.69	NA	NA	NA	NA	NA	NA
NRC - OC3 - Facility Termination - Add'l	TBA	NA	NA	$413.00	NA	NA	NA	NA	NA	NA
NRC - OC3 - Facility Termination - Disconnect - 1st	TBA	NA	NA	$122.31	NA	NA	NA	NA	NA	NA
NRC - OC3 - Facility Termination - Disconnect - Add'l	TBA	NA	NA	$119.14	NA	NA	NA	NA	NA	NA
NRC - Electronic Svc Order, per LSR	SOMEC	NA	NA	$3.50	NA	NA	NA	NA	NA	NA
NRC - OC3 - Incremental Charge--Manual Svc Order - 1st	SOMAN	NA	NA	$37.55	NA	NA	NA	NA	NA	NA
NRC - OC3 - Incremental Charge--Manual Svc Order - Add'l	SOMAN	NA	NA	$37.55	NA	NA	NA	NA	NA	NA
NRC - OC3 -Incremental Cost - Manual Svc. Order vs. Elect-Disconnect-1st	SOMAN	NA	NA	$18.03	NA	NA	NA	NA	NA	NA
NRC - OC3 -Incremental Cost - Manual Svc. Order vs. Elect-Disconnect-Add'l	SOMAN	NA	NA	$18.03	NA	NA	NA	NA	NA	NA
NRC-All Existing Combination "Switch As Is" Conversion Charge (Note 6)										
NRC-OC-3 COMBINATION - "Switch As Is" Conversion Charge - 1st	UNCCC	$54.03	$32.75	$58.43	$54.09	$54.23	$54.09	$54.00	$54.26	$54.13
NRC-OC-3 COMBINATION - "Switch As Is" Conversion Charge - Add'l	UNCCC	$32.11	$32.75	$26.99	$32.16	$32.24	$32.16	$32.10	$32.25	$32.17
NRC- OC-3 COMBINATION - "Switch As Is" Conversion Charge - Disconnect - 1st	UNCCC	$0.00	$16.77	$12.61	$0.00	$0.00	$0.00	$0.00	$0.00	$0.00
NRC- OC-3 COMBINATION - "Switch As Is" Conversion Charge - Disconnect - Add'l	UNCCC	$0.00	$16.77	$12.61	$0.00	$0.00	$0.00	$0.00	$0.00	$0.00
Local Channel - OC12	USOC	AL	FL	GA	KY	LA	MS	NC	SC	TN
Local Channel - OC12 - per Mile	1L5NC	$10.13	$11.18	$8.31	$40.80	$36.40	$50.79	$30.38	$14.50	$28.51
Local Channel - OC12 - per Facility Termination	TBA	$2,557	$2,753	$2,109.00	$2,457	$2,571	$2,371	$2,122	$2,663	$2,079
NRC - Ordinarily Combined in GA (Note 5)										
NRC - OC12 - Facility Termination - 1st	TBA	NA	NA	$1,162.00	NA	NA	NA	NA	NA	NA
NRC - OC12 - Facility Termination - Add'l	TBA	NA	NA	$413.00	NA	NA	NA	NA	NA	NA
NRC - OC12 - Facility Termination - Disconnect - 1st	TBA	NA	NA	$122.31	NA	NA	NA	NA	NA	NA
NRC - OC12 - Facility Termination - Disconnect - Add'l	TBA	NA	NA	$119.14	NA	NA	NA	NA	NA	NA
NRC - Electronic Svc Order, per LSR	SOMEC	NA	NA	$3.50	NA	NA	NA	NA	NA	NA
NRC -OC12 - Incremental Charge - Manual Svc Order - 1st	SOMAN	NA	NA	$37.55	NA	NA	NA	NA	NA	NA
NRC - OC12 - Incremental Charge - Manual Svc Order - Add'l	SOMAN	NA	NA	$37.55	NA	NA	NA	NA	NA	NA
NRC - OC12 - Incremental Cost-Manual Svc. Order vs. Elect-Disconnect-1st	SOMAN	NA	NA	$18.03	NA	NA	NA	NA	NA	NA
NRC - OC12 - Incremental Cost-Manual Svc. Order vs. Elect-Disconnect-Add'l	SOMAN	NA	NA	$18.03	NA	NA	NA	NA	NA	NA
NRC-All Existing Combination "Switch As Is" Conversion Charge (Note 6)										
NRC-OC-12 COMBINATION - "Switch As Is" Conversion Charge - 1st	UNCCC	$54.03	$32.75	$58.43	$54.09	$54.23	$54.09	$54.00	$54.26	$54.13
NRC-OC-12 COMBINATION - "Switch As Is" Conversion Charge - Add'l	UNCCC	$32.11	$32.75	$26.99	$32.16	$32.24	$32.16	$32.10	$32.25	$32.17
NRC- OC-12 COMBINATION - "Switch As Is" Conversion Charge - Disconnect - 1st	UNCCC	$0.00	$16.77	$12.61	$0.00	$0.00	$0.00	$0.00	$0.00	$0.00
NRC- OC-12 COMBINATION - "Switch As Is" Conversion Charge - Disconnect - Add'	UNCCC	$0.00	$16.77	$12.61	$0.00	$0.00	$0.00	$0.00	$0.00	$0.00
Local Channel - OC48	USOC	AL	FL	GA	KY	LA	MS	NC	SC	TN
Local Channel - OC48 - per Mile	1L5NC	$33.22	$36.67	$27.25	$133.84	$119.40	$166.59	$120.02	$47.57	$93.50
Local Channel - OC48 - per Facility Termination	TBA	$1,713	$1,944	$1,598.00	$2,129	$2,268	$1,753	$1,677	$1,733	$1,832
Local Channel - OC12 interface on OC48 Facility	TBA	$736.71	$586.28	$594.80	$725.77	$723.29	$667.00	$582.66	$773.40	$570.54
NRC - Ordinarily Combined in GA (Note 5)										
NRC - OC48 - Facility Termination - 1st	TBA	NA	NA	$1,162.00	NA	NA	NA	NA	NA	NA
NRC - OC48 - Facility Termination - Add'l	TBA	NA	NA	$413.00	NA	NA	NA	NA	NA	NA
NRC - OC48 - Interface OC12 on OC48 - 1st	TBA	NA	NA	$539.36	NA	NA	NA	NA	NA	NA
NRC - OC48 - Interface OC12 on OC48 - Add'l	TBA	NA	NA	$317.38	NA	NA	NA	NA	NA	NA
NRC - OC48 - Facility Termination - Disconnect - 1st	TBA	NA	NA	$122.31	NA	NA	NA	NA	NA	NA
NRC - OC48 - Facility Termination - Disconnect - Add'l	TBA	NA	NA	$119.14	NA	NA	NA	NA	NA	NA
NRC - OC48- Interface OC12 on OC48 - Disconnect - 1st	TBA	NA	NA	$122.31	NA	NA	NA	NA	NA	NA
NRC - OC48 - Interface OC12 on OC48 - Disconnect - Add'l	TBA	NA	NA	$119.14	NA	NA	NA	NA	NA	NA

BELLSOUTH/API RATES
NETWORK ELEMENTS
AND OTHER SERVICES

New EEL rates are the sum of the individual UNE network elements (interoffice transport and loop [channelization if applicable].										
NRC - Electronic Svc Order, per LSR	SOMEC	NA	NA	$3.50	NA	NA	NA	NA	NA	NA
NRC - OC48 - Facility Termination-Manual Svc Order vs Electronic-Disconnect-1st	SOMAN	NA	NA	$18.03	NA	NA	NA	NA	NA	NA
NRC - OC48 - Facility Termination-Manual Svc Order vs Electronic-Disconnect-Add'l	SOMAN	NA	NA	$18.03	NA	NA	NA	NA	NA	NA
NRC - OC48 - Interface - Manual Svc Order vs Electronic-Disconnect-1st	SOMAN	NA	NA	$18.03	NA	NA	NA	NA	NA	NA
NRC - OC48 - Interface - Manual Svc Order vs Electronic-Disconnect-Add'l	SOMAN	NA	NA	$18.03	NA	NA	NA	NA	NA	NA
NRC - OC-48 - Incremental Charge--Manual Svc Order-1st	SOMAN	NA	NA	$37.55	NA	NA	NA	NA	NA	NA
NRC - OC-48 - Incremental Charge--Manual Svc Order-Add'l	SOMAN	NA	NA	$37.55	NA	NA	NA	NA	NA	NA
NRC - OC48 - Interface OC12 on OC48 - Incremental Charge--Manual Svc Order-1st	SOMAN	NA	NA	$37.55	NA	NA	NA	NA	NA	NA
NRC - OC48 - Interface OC12 on OC48 - Incremental Charge--Manual Svc Order-Add	SOMAN	NA	NA	$37.55	NA	NA	NA	NA	NA	NA
NRC-All Existing Combination "Switch As Is" Conversion Charge (Note 6)										
NRC-OC-48 COMBINATION - "Switch As Is" Conversion Charge - 1st	UNCCC	$54.03	$32.75	$58.43	$54.09	$54.23	$54.09	$54.00	$54.26	$54.13
NRC-OC-48 COMBINATION - "Switch As Is" Conversion Charge - Add'l	UNCCC	$32.11	$32.75	$26.99	$32.16	$32.24	$32.16	$32.10	$32.25	$32.17
NRC- OC-48 COMBINATION - "Switch As Is" Conversion Charge - Disconnect - 1st	UNCCC	$0.00	$16.77	$12.61	$0.00	$0.00	$0.00	$0.00	$0.00	$0.00
NRC- OC-48 COMBINATION - "Switch As Is" Conversion Charge - Disconnect - Add'	UNCCC	$0.00	$16.77	$12.61	$0.00	$0.00	$0.00	$0.00	$0.00	$0.00
Interoffice Channels:										
Interoffice Channel - Dedicated - 2-wire VG										
Interoffice Channel - Dedicated 2-wire VG - per mile per month	1L5XX	$0.0339	$0.0100	$0.0222	$0.0301	$0.0384	$0.0323	$0.0282	$0.0373	$0.0173
Interoffice Channel - Dedicated 2-wire VG - Facility Termination per month	U1TV2	$18.49	$26.72	$17.07	$27.66	$19.10	$21.33	$18.01	$21.42	$18.33
NRC - Ordinarily Combined in GA (Note 5)										
NRC - 2-wire VG Interoffice Channel - Facility Termination - 1st	U1TV2	NA	NA	$79.61	NA	NA	NA	NA	NA	NA
NRC - 2-wire VG Interoffice Channel - Facility Termination - Add'l	U1TV2	NA	NA	$36.08	NA	NA	NA	NA	NA	NA
NRC - Electronic Svc Order, per LSR	SOMEC	NA	NA	$3.50	NA	NA	NA	NA	NA	NA
NRC - 2-wire VG Interoffice Channel - Incremental Charge--Manual Svc Order - 1st	SOMAN	NA	NA	$18.94	NA	NA	NA	NA	NA	NA
NRC - 2-wire VG Interoffice Channel - Incremental Charge--Manual Svc Order - Add'l	SOMAN	NA	NA	$18.94	NA	NA	NA	NA	NA	NA
NRC - 2-wire VG Interoffice Channel - Incremental Charge--Manual Svc Order - Disco	SOMAN	NA	NA	NA	NA	NA	NA	NA	NA	NA
NRC - 2-wire VG Interoffice Channel - Incremental Charge--Manual Svc Order - Disco	SOMAN	NA	NA	NA	NA	NA	NA	NA	NA	NA
NRC-All Existing Combination "Switch As Is" Conversion Charge (Note 6)										
NRC-2/4-WIRE COMBINATION - "Switch As Is" Conversion Charge - 1st	UNCCC	$54.03	$32.75	$58.43	$54.09	$54.23	$54.09	$54.00	$54.26	$54.13
NRC-2/4-WIRE COMBINATION - "Switch As Is" Conversion Charge - Add'l	UNCCC	$32.11	$32.75	$26.99	$32.16	$32.24	$32.16	$32.10	$32.25	$32.17
NRC- 2/4-WIRE COMBINATION - "Switch As Is" Conversion Charge - Disconnect - 1st	UNCCC	$0.00	$16.77	$12.61	$0.00	$0.00	$0.00	$0.00	$0.00	$0.00
NRC- 2/4-WIRE COMBINATION - "Switch As Is" Conversion Charge - Disconnect - Add'l	UNCCC	$0.00	$16.77	$12.61	$0.00	$0.00	$0.00	$0.00	$0.00	$0.00
Interoffice Channel - Dedicated - 4-wire VG										
Interoffice Channel - Dedicated 4-wire VG - per mile per month	1L5XX	NA	$0.0100	NA	NA	NA	NA	NA	NA	NA
Interoffice Channel - Dedicated 4-wire VG - Facility Termination per month	U1TV4	NA	$23.82	NA	NA	NA	NA	NA	NA	NA
NRC - Ordinarily Combined in GA (Note 5)										
NRC - 4-wire VG Interoffice Channel - Facility Termination - 1st	U1TV4	NA	NA	NA	NA	NA	NA	NA	NA	NA
NRC - 4-wire VG Interoffice Channel - Facility Termination - Add'l	U1TV4	NA	NA	NA	NA	NA	NA	NA	NA	NA
NRC - Electronic Svc Order, per LSR	SOMEC	NA	NA	NA	NA	NA	NA	NA	NA	NA
NRC - 4-wire VG Interoffice Channel - Incremental Charge--Manual Svc Order - 1st	SOMAN	NA	NA	NA	NA	NA	NA	NA	NA	NA
NRC - 4-wire VG Interoffice Channel - Incremental Charge--Manual Svc Order - Add'l	SOMAN	NA	NA	NA	NA	NA	NA	NA	NA	NA
NRC - 4-wire VG Interoffice Channel - Incremental Charge--Manual Svc Order - Disco	SOMAN	NA	NA	NA	NA	NA	NA	NA	NA	NA
NRC - 4-wire VG Interoffice Channel - Incremental Charge--Manual Svc Order - Disco	SOMAN	NA	NA	NA	NA	NA	NA	NA	NA	NA
NRC-All Existing Combination "Switch As Is" Conversion Charge (Note 6)										
NRC-2/4-WIRE COMBINATION - "Switch As Is" Conversion Charge - 1st	UNCCC	$54.03	$32.75	$58.43	$54.09	$54.23	$54.09	$54.00	$54.26	$54.13
NRC-2/4-WIRE COMBINATION - "Switch As Is" Conversion Charge - Add'l	UNCCC	$32.11	$32.75	$26.99	$32.16	$32.24	$32.16	$32.10	$32.25	$32.17
NRC- 2/4-WIRE COMBINATION - "Switch As Is" Conversion Charge - Disconnect - 1st	UNCCC	$0.00	$16.77	$12.61	$0.00	$0.00	$0.00	$0.00	$0.00	$0.00
NRC- 2/4-WIRE COMBINATION - "Switch As Is" Conversion Charge - Disconnect - Add'l	UNCCC	$0.00	$16.77	$12.61	$0.00	$0.00	$0.00	$0.00	$0.00	$0.00
Interoffice Channel - Dedicated - DS0 - 56kbps										
Interoffice Channel - Dedicated - DS0 - 56kbps - per mile per month	1L5XX	$0.0339	$0.0100	$0.0222	$0.0301	$0.0384	$0.0323	$0.0282	$0.0373	$0.1730
Interoffice Channel - Dedicated - DS0 - 56 kbps - Facility Termination per month	U1TD5	$17.81	$19.46	$16.45	$26.95	$18.37	$20.64	$17.40	$20.71	$17.74
NRC - Ordinarily Combined in GA (Note 5)										
NRC - 4-wire 56kbps Interoffice Channel - Facility Termination - 1st	U1TD5	NA	NA	$79.61	NA	NA	NA	NA	NA	NA

BELLSOUTH/API RATES
NETWORK ELEMENTS
AND OTHER SERVICES

New EEL rates are the sum of the individual UNE network elements (interoffice transport and loop [channelization if applicable].										
NRC - 4-wire 56 kbps Interoffice Channel - Facility Termination - Add'l	U1TD5	NA	NA	$36.08	NA	NA	NA	NA	NA	NA
NRC - Electronic Svc Order, per LSR	SOMEC	NA	NA	$3.50	NA	NA	NA	NA	NA	NA
NRC - 4-wire 56 kbps Interoffice Channel - Incremental Charge--Manual Svc Order - 1	SOMAN	NA	NA	$18.94	NA	NA	NA	NA	NA	NA
NRC - 4-wire 56 kbps Interoffice Channel - Incremental Charge--Manual Svc Order - A	SOMAN	NA	NA	$18.94	NA	NA	NA	NA	NA	NA
NRC - 4-wire 56 kbps Interoffice Channel - Incremental Charge--Manual Svc Order - D	SOMAN	NA	NA	NA	NA	NA	NA	NA	NA	NA
NRC - 4-wire 56 kbps Interoffice Channel - Incremental Charge--Manual Svc Order - D	SOMAN	NA	NA	NA	NA	NA	NA	NA	NA	NA
NRC-All Existing Combination "Switch As Is" Conversion Charge (Note 6)										
NRC-2/4-WIRE COMBINATION - "Switch As Is" Conversion Charge - 1st	UNCCC	$54.03	$32.75	$58.43	$54.09	$54.23	$54.09	$54.00	$54.26	$54.13
NRC-2/4-WIRE COMBINATION - "Switch As Is" Conversion Charge - Add'l	UNCCC	$32.11	$32.75	$26.99	$32.16	$32.24	$32.16	$32.10	$32.25	$32.17
NRC- 2/4-WIRE COMBINATION - "Switch As Is" Conversion Charge - Disconnect - 1st	UNCCC	$0.00	$16.77	$12.61	$0.00	$0.00	$0.00	$0.00	$0.00	$0.00
NRC- 2/4-WIRE COMBINATION - "Switch As Is" Conversion Charge - Disconnect - Add'l	UNCCC	$0.00	$16.77	$12.61	$0.00	$0.00	$0.00	$0.00	$0.00	$0.00
Interoffice Channel - Dedicated - DS0 - 64kbps										
Interoffice Channel - Dedicated - DS0 - 64kbps - per mile per month	1L5XX	$0.0339	$0.0100	$0.0222	$0.0301	$0.0384	$0.0323	$0.0282	$0.0373	$0.1730
Interoffice Channel - Dedicated - DS0 - 64 kbps - Facility Termination per month	U1TD6	$17.81	$19.46	$16.45	$26.95	$18.37	$20.64	$17.40	$20.71	$17.74
NRC - Ordinarily Combined in GA (Note 5)										
NRC - 4-wire 64kbps Interoffice Channel - Facility Termination - 1st	U1TD6	NA	NA	$79.61	NA	NA	NA	NA	NA	NA
NRC - 4-wire 64 kbps Interoffice Channel - Facility Termination - Add'l	U1TD6	NA	NA	$36.08	NA	NA	NA	NA	NA	NA
NRC - Electronic Svc Order, per LSR	SOMEC	NA	NA	$3.50	NA	NA	NA	NA	NA	NA
NRC - 4-wire 64 kbps Interoffice Channel - Incremental Charge--Manual Svc Order - 1	SOMAN	NA	NA	$18.94	NA	NA	NA	NA	NA	NA
NRC - 4-wire 64 kbps Interoffice Channel - Incremental Charge--Manual Svc Order - A	SOMAN	NA	NA	$18.94	NA	NA	NA	NA	NA	NA
NRC - 4-wire 64 kbps Interoffice Channel - Incremental Charge--Manual Svc Order - D	SOMAN	NA	NA	NA	NA	NA	NA	NA	NA	NA
NRC - 4-wire 64 kbps Interoffice Channel - Incremental Charge--Manual Svc Order - D	SOMAN	NA	NA	NA	NA	NA	NA	NA	NA	NA
NRC-All Existing Combination "Switch As Is" Conversion Charge (Note 6)										
NRC-2/4-WIRE COMBINATION - "Switch As Is" Conversion Charge - 1st	UNCCC	$54.03	$32.75	$58.43	$54.09	$54.23	$54.09	$54.00	$54.26	$54.13
NRC-2/4-WIRE COMBINATION - "Switch As Is" Conversion Charge - Add'l	UNCCC	$32.11	$32.75	$26.99	$32.16	$32.24	$32.16	$32.10	$32.25	$32.17
NRC- 2/4-WIRE COMBINATION - "Switch As Is" Conversion Charge - Disconnect - 1st	UNCCC	$0.00	$16.77	$12.61	$0.00	$0.00	$0.00	$0.00	$0.00	$0.00
NRC- 2/4-WIRE COMBINATION - "Switch As Is" Conversion Charge - Disconnect - Add'l	UNCCC	$0.00	$16.77	$12.61	$0.00	$0.00	$0.00	$0.00	$0.00	$0.00
Interoffice Channel - Dedicated - DS1										
Interoffice Channel - Dedicated - DS1 - per mile per month	1L5XX	$0.6920	$0.6013	$0.4523	$0.4500	$0.7831	$0.6598	$0.0783	$0.7598	$0.3525
Interoffice Channel - Dedicated - DS1 - Facility Termination per month	U1TF1	$79.69	$99.79	$78.47	$55.05	$93.40	$74.40	$71.29	$94.98	$75.83
NRC - Ordinarily Combined in GA (Note 5)										
NRC - DS1 Interoffice Channel - Facility Termination - 1st	U1TF1	NA	NA	$169.57	NA	NA	NA	NA	NA	NA
NRC - DS1 Interoffice Channel - Facility Termination - Add'l	U1TF1	NA	NA	$112.77	NA	NA	NA	NA	NA	NA
NRC - Electronic Svc Order, per LSR	SOMEC	NA	NA	$3.50	NA	NA	NA	NA	NA	NA
NRC - DS1 Interoffice Channel - Incremental Charge--Manual Svc Order - 1st	SOMAN	NA	NA	$23.98	NA	NA	NA	NA	NA	NA
NRC - DS1 Interoffice Channel - Incremental Charge--Manual Svc Order - Add'l	SOMAN	NA	NA	$17.77	NA	NA	NA	NA	NA	NA
NRC - DS1 Interoffice Channel - Incremental Charge--Manual Svc Order - Disconnect	SOMAN	NA	NA	$15.13	NA	NA	NA	NA	NA	NA
NRC - DS1 Interoffice Channel - Incremental Charge--Manual Svc Order - Disconnec	SOMAN	NA	NA	$7.02	NA	NA	NA	NA	NA	NA
NRC-All Existing Combination "Switch As Is" Conversion Charge (Note 6)										
NRC-DS1 COMBINATION - "Switch As Is" Conversion Charge - 1st	UNCCC	$54.03	$32.75	$58.43	$54.09	$54.23	$54.09	$54.00	$54.26	$54.13
NRC-DS1 COMBINATION - "Switch As Is" Conversion Charge - Add'l	UNCCC	$32.11	$32.75	$26.99	$32.16	$32.24	$32.16	$32.10	$32.25	$32.17
NRC- DS1 COMBINATION - "Switch As Is" Conversion Charge - Disconnect - 1st	UNCCC	$0.00	$16.77	$12.61	$0.00	$0.00	$0.00	$0.00	$0.00	$0.00
NRC- DS1 COMBINATION - "Switch As Is" Conversion Charge - Disconnect - Add'l	UNCCC	$0.00	$16.77	$12.61	$0.00	$0.00	$0.00	$0.00	$0.00	$0.00
Interoffice Channel - Dedicated - DS3 - per mile per month										
Interoffice Channel - Dedicated - DS3 - per mile per month	1L5XX	$4.98	$4.25	$6.46	$12.06	$16.15	$13.48	$12.98	$19.14	$6.88
Interoffice Channel - Dedicated - DS3 - Facility Termination per month	U1TF3	$898.15	$1,130	$717.60	$1,112.02	$1,131.09	$686.84	$720.38	$904.49	$840.61
NRC - Ordinarily Combined in GA (Note 5)										
NRC - DS3 Interoffice Channel - Facility Termination - 1st	U1TF3	NA	NA	$578.97	NA	NA	NA	NA	NA	NA
NRC - DS3 Interoffice Channel - Facility Termination - Add'l	U1TF3	NA	NA	$312.17	NA	NA	NA	NA	NA	NA
NRC - Electronic Svc Order, per LSR	SOMEC	NA	NA	$3.50	NA	NA	NA	NA	NA	NA
NRC - DS3 Interoffice Channel - Incremental Charge--Manual Svc Order - 1st	SOMAN	NA	NA	$51.27	NA	NA	NA	NA	NA	NA
NRC - DS3 Interoffice Channel - Incremental Charge--Manual Svc Order - Add'l	SOMAN	NA	NA	$38.87	NA	NA	NA	NA	NA	NA

BELLSOUTH/API RATES
NETWORK ELEMENTS
AND OTHER SERVICES

New EEL rates are the sum of the individual UNE network elements (interoffice transport and loop [channelization if applicable].										
NRC - DS3 Interoffice Channel - Incremental Charge--Manual Svc Order - Disconnect	SOMAN	NA	NA	$30.42	NA	NA	NA	NA	NA	NA
NRC - DS3 Interoffice Channel - Incremental Charge--Manual Svc Order - Disconnect	SOMAN	NA	NA	$18.76	NA	NA	NA	NA	NA	NA
NRC-All Existing Combination "Switch As Is" Conversion Charge (Note 6)										
NRC-DS3 COMBINATION - "Switch As Is" Conversion Charge - 1st	UNCCC	$54.03	$32.75	$58.43	$54.09	$54.23	$54.09	$54.00	$54.26	$54.13
NRC-DS3 COMBINATION - "Switch As Is" Conversion Charge - Add'l	UNCCC	$32.11	$32.75	$26.99	$32.16	$32.24	$32.16	$32.10	$32.25	$32.17
NRC- DS3 COMBINATION - "Switch As Is" Conversion Charge - Disconnect - 1st	UNCCC	$0.00	$16.77	$12.61	$0.00	$0.00	$0.00	$0.00	$0.00	$0.00
NRC- DS3 COMBINATION - "Switch As Is" Conversion Charge - Disconnect - Add'l	UNCCC	$0.00	$16.77	$12.61	$0.00	$0.00	$0.00	$0.00	$0.00	$0.00
Interoffice Channel - Dedicated - STS-1										
Interoffice Channel - Dedicated - STS-1 - per mile per month	1L5XX	$4.98	$9.32	$2.72	$12.62	$14.04	$15.02	$12.98	$8.13	$5.89
Interoffice Channel - Dedicated - STS-1 - Facility Termination per month	U1TFS	$898.15	$569.67	$788.00	$1,204	$1,101	$744.38	$720.38	$967.70	$760.20
NRC - Ordinarily Combined in GA (Note 5)										
NRC - STS-1 Interoffice Channel - Facility Termination - 1st	U1TFS	NA	NA	$587.08	NA	NA	NA	NA	NA	NA
NRC - STS-1 Interoffice Channel - Facility Termination - Add'l	U1TFS	NA	NA	$238.28	NA	NA	NA	NA	NA	NA
NRC - Electronic Svc Order, per LSR	SOMEC	NA	NA	$3.50	NA	NA	NA	NA	NA	NA
NRC - STS-1 Interoffice Channel - Incremental Charge--Manual Svc Order - 1st	SOMAN	NA	NA	$61.19	NA	NA	NA	NA	NA	NA
NRC - STS-1 Interoffice Channel - Incremental Charge--Manual Svc Order - Add'l	SOMAN	NA	NA	$61.19	NA	NA	NA	NA	NA	NA
NRC - STS-1 Interoffice Channel - Incremental Charge--Manual Svc Order - Disconne	SOMAN	NA	NA	$3.17	NA	NA	NA	NA	NA	NA
NRC - STS-1 Interoffice Channel - Incremental Charge--Manual Svc Order - Disconne	SOMAN	NA	NA	$3.17	NA	NA	NA	NA	NA	NA
NRC-All Existing Combination "Switch As Is" Conversion Charge (Note 6)										
NRC-STS-1 COMBINATION - "Switch As Is" Conversion Charge - 1st	UNCCC	$54.03	$32.75	$58.43	$54.09	$54.23	$54.09	$54.00	$54.26	$54.13
NRC-STS-1 COMBINATION - "Switch As Is" Conversion Charge - Add'l	UNCCC	$32.11	$32.75	$26.99	$32.16	$32.24	$32.16	$32.10	$32.25	$32.17
NRC- STS-1 COMBINATION - "Switch As Is" Conversion Charge - Disconnect - 1st	UNCCC	$0.00	$16.77	$12.61	$0.00	$0.00	$0.00	$0.00	$0.00	$0.00
NRC- STS-1 COMBINATION - "Switch As Is" Conversion Charge - Disconnect - Add'l	UNCCC	$0.00	$16.77	$12.61	$0.00	$0.00	$0.00	$0.00	$0.00	$0.00
Interoffice Channel - OC3										
Interoffice Channel - OC3 - per Mile	1L5XX	$7.35	$8.38	$4.37	$27.97	$23.89	$18.35	$14.10	$9.75	$13.45
Interoffice Channel - OC3 - per Facility Termination	TBA	$2,475	$3,043	$2,187.00	$3,390	$2,990	$1,892.00	$2,071	$2,802	$2,124
NRC - Ordinarily Combined in GA (Note 5)										
NRC - OC3 - Facility Termination - 1st	TBA	NA	NA	$947.69	NA	NA	NA	NA	NA	NA
NRC - OC3 - Facility Termination - Add'l	TBA	NA	NA	$413.00	NA	NA	NA	NA	NA	NA
NRC - OC3 - Facility Termination - Disconnect - 1st	TBA	NA	NA	$122.31	NA	NA	NA	NA	NA	NA
NRC - OC3 - Facility Termination - Disconnect - Add'l	TBA	NA	NA	$119.14	NA	NA	NA	NA	NA	NA
NRC - Electronic Svc Order, per LSR	SOMEC	NA	NA	$3.50	NA	NA	NA	NA	NA	NA
NRC - OC3 - Incremental Charge--Manual Svc Order - 1st	SOMAN	NA	NA	$37.55	NA	NA	NA	NA	NA	NA
NRC - OC3 - Incremental Charge--Manual Svc Order - Add'l	SOMAN	NA	NA	$37.55	NA	NA	NA	NA	NA	NA
NRC - OC3 -Incremental Cost - Manual Svc. Order vs. Elect-Disconnect-1st	SOMAN	NA	NA	$18.03	NA	NA	NA	NA	NA	NA
NRC - OC3 -Incremental Cost - Manual Svc. Order vs. Elect-Disconnect-Add'l	SOMAN	NA	NA	$18.03	NA	NA	NA	NA	NA	NA
NRC-All Existing Combination "Switch As Is" Conversion Charge (Note 6)										
NRC-OC-3 COMBINATION - "Switch As Is" Conversion Charge - 1st	UNCCC	$54.03	$32.75	$58.43	$54.09	$54.23	$54.09	$54.00	$54.26	$54.13
NRC-OC-3 COMBINATION - "Switch As Is" Conversion Charge - Add'l	UNCCC	$32.11	$32.75	$26.99	$32.16	$32.24	$32.16	$32.10	$32.25	$32.17
NRC- OC-3 COMBINATION - "Switch As Is" Conversion Charge - Disconnect - 1st	UNCCC	$0.00	$16.77	$12.61	$0.00	$0.00	$0.00	$0.00	$0.00	$0.00
NRC- OC-3 COMBINATION - "Switch As Is" Conversion Charge - Disconnect - Add'l	UNCCC	$0.00	$16.77	$12.61	$0.00	$0.00	$0.00	$0.00	$0.00	$0.00
Interoffice Channel - OC12										
Interoffice Channel - OC12 - per Mile	1L5XX	$19.26	$26.91	$15.05	$84.88	$74.44	$60.42	$30.38	$32.52	$49.80
Interoffice Channel - OC12 - per Facility Termination	TBA	$9,763	$11,685	$8,202.00	$12,344	$11,517	$7,182.00	$7,676.00	$11,132	$8,015
NRC - Ordinarily Combined in GA (Note 5)										
NRC - OC12 - Facility Termination - 1st	TBA	NA	NA	$1,034.00	NA	NA	NA	NA	NA	NA
NRC - OC12 - Facility Termination - Add'l	TBA	NA	NA	$317.38	NA	NA	NA	NA	NA	NA
NRC - OC12 - Facility Termination - Disconnect - 1st	TBA	NA	NA	$122.31	NA	NA	NA	NA	NA	NA
NRC - OC12 - Facility Termination - Disconnect - Add'l	TBA	NA	NA	$119.14	NA	NA	NA	NA	NA	NA
NRC - Electronic Svc Order, per LSR	SOMEC	NA	NA	$3.50	NA	NA	NA	NA	NA	NA
NRC -OC12 - Incremental Charge - Manual Svc Order - 1st	SOMAN	NA	NA	$37.55	NA	NA	NA	NA	NA	NA
NRC - OC12 - Incremental Charge - Manual Svc Order - Add'l	SOMAN	NA	NA	$37.55	NA	NA	NA	NA	NA	NA

BELLSOUTH/API RATES
NETWORK ELEMENTS
AND OTHER SERVICES

		New EEL rates are the sum of the individual UNE network elements (interoffice transport and loop [channelization if applicable].									
		NRC - OC12 - Incremental Cost-Manual Svc. Order vs. Elect-Disconnect-1st	SOMAN	NA	NA	$18.03	NA	NA	NA	NA	NA	NA
		NRC - OC12 - Incremental Cost-Manual Svc. Order vs. Elect-Disconnect-Add'l	SOMAN	NA	NA	$18.03	NA	NA	NA	NA	NA	NA
		NRC-All Existing Combination "Switch As Is" Conversion Charge (Note 6)										
		NRC-OC-12 COMBINATION - "Switch As Is" Conversion Charge - 1st	UNCCC	$54.03	$32.75	$58.43	$54.09	$54.23	$54.09	$54.00	$54.26	$54.13
		NRC-OC-12 COMBINATION - "Switch As Is" Conversion Charge - Add'l	UNCCC	$32.11	$32.75	$26.99	$32.16	$32.24	$32.16	$32.10	$32.25	$32.17
		NRC- OC-12 COMBINATION - "Switch As Is" Conversion Charge - Disconnect - 1st	UNCCC	$0.00	$16.77	$12.61	$0.00	$0.00	$0.00	$0.00	$0.00	$0.00
		NRC- OC-12 COMBINATION - "Switch As Is" Conversion Charge - Disconnect - Add'	UNCCC	$0.00	$16.77	$12.61	$0.00	$0.00	$0.00	$0.00	$0.00	$0.00
		Interoffice Channel - OC48										
		Interoffice Channel - OC48 - per Mile	1L5XX	$30.65	$34.66	$25.70	$138.02	$128.59	$102.43	$120.02	$45.92	$106.55
		Interoffice Channel - OC48 - per Facility Termination	TBA	$11,691	$12,554	$11,134.00	$16,017	$14,950	$11,480	$10,952	$967.58	$11,632
		Interoffice Channel - OC12 interface on OC48 Facility	TBA	$1,424	$1,208	$1,137.00	$1,497	$1,451	$1,351.00	$582.66	$1,561	$1,170
		NRC - Ordinarily Combined in GA (Note 5)										
		NRC - OC48 - Facility Termination - 1st	TBA	NA	NA	$1,034.00	NA	NA	NA	NA	NA	NA
		NRC - OC48 - Facility Termination - Add'l	TBA	NA	NA	$317.38	NA	NA	NA	NA	NA	NA
		NRC - OC48 - Interface OC12 on OC48 - 1st	TBA	NA	NA	$539.36	NA	NA	NA	NA	NA	NA
		NRC - OC48 - Interface OC12 on OC48 - Add'l	TBA	NA	NA	$317.38	NA	NA	NA	NA	NA	NA
		NRC - OC48 - Facility Termination - Disconnect - 1st	TBA	NA	NA	$122.31	NA	NA	NA	NA	NA	NA
		NRC - OC48 - Facility Termination - Disconnect - Add'l	TBA	NA	NA	$119.14	NA	NA	NA	NA	NA	NA
		NRC - OC48- Interface OC12 on OC48 - Disconnect - 1st	TBA	NA	NA	$122.31	NA	NA	NA	NA	NA	NA
		NRC - OC48 - Interface OC12 on OC48 - Disconnect - Add'l	TBA	NA	NA	$37.55	NA	NA	NA	NA	NA	NA
		NRC - Electronic Svc Order, per LSR	SOMEC	NA	NA	$3.50	NA	NA	NA	NA	NA	NA
		NRC - OC48 - Facility Termination-Manual Svc Order vs Electronic-Disconnect-1st	SOMAN	NA	NA	$37.55	NA	NA	NA	NA	NA	NA
		NRC - OC48 - Facility Termination-Manual Svc Order vs Electronic-Disconnect-Add'l	SOMAN	NA	NA	$37.55	NA	NA	NA	NA	NA	NA
		NRC - OC48 - Interface - Manual Svc Order vs Electronic-Disconnect-1st	SOMAN	NA	NA	$37.55	NA	NA	NA	NA	NA	NA
		NRC - OC48 - Interface - Manual Svc Order vs Electronic-Disconnect-Add'l	SOMAN	NA	NA	$18.03	NA	NA	NA	NA	NA	NA
		NRC - OC-48 - Incremental Charge--Manual Svc Order-1st	SOMAN	NA	NA	$18.03	NA	NA	NA	NA	NA	NA
		NRC - OC-48 - Incremental Charge--Manual Svc Order-Add'l	SOMAN	NA	NA	$18.03	NA	NA	NA	NA	NA	NA
		NRC - OC48 - Interface OC12 on OC48 - Incremental Charge--Manual Svc Order-1st	SOMAN	NA	NA	$18.03	NA	NA	NA	NA	NA	NA
		NRC - OC48 - Interface OC12 on OC48 - Incremental Charge--Manual Svc Order-Add	SOMAN	NA	NA	$18.03	NA	NA	NA	NA	NA	NA
		NRC-All Existing Combination "Switch As Is" Conversion Charge (Note 6)										
		NRC-OC-48 COMBINATION - "Switch As Is" Conversion Charge - 1st	UNCCC	$54.03	$32.75	$58.43	$54.09	$54.23	$54.09	$54.00	$54.26	$54.13
		NRC-OC-48 COMBINATION - "Switch As Is" Conversion Charge - Add'l	UNCCC	$32.11	$32.75	$26.99	$32.16	$32.24	$32.16	$32.10	$32.25	$32.17
		NRC- OC-48 COMBINATION - "Switch As Is" Conversion Charge - Disconnect - 1st	UNCCC	$0.00	$16.77	$12.61	$0.00	$0.00	$0.00	$0.00	$0.00	$0.00
		NRC- OC-48 COMBINATION - "Switch As Is" Conversion Charge - Disconnect - Add'	UNCCC	$0.00	$16.77	$12.61	$0.00	$0.00	$0.00	$0.00	$0.00	$0.00
		Channelization:										
		DS3 Channelization										
		DS3 Channelized System per month	MQ3	$225.36	$222.61	$182.04	$236.32	$245.84	$229.30	$226.81	$200.01	$222.98
		DS3 Interface per month (DS1 COCI)	UC1D1	$17.22	$14.51	$11.02	$8.52	$7.55	$5.58	$4.61	$11.99	$3.91
		NRC - Ordinarily Combined in GA (Note 5)										
		NRC - DS3 Channelization - 1st	MQ3	NA	NA	$316.28	NA	NA	NA	NA	NA	NA
		NRC - DS3 Channelization - Add'l	MQ3	NA	NA	$171.72	NA	NA	NA	NA	NA	NA
		NRC - Channel Activation - 1st	UC1D1	NA	NA	$12.02	NA	NA	NA	NA	NA	NA
		NRC - Channel Activation - Addl	UC1D1	NA	NA	$8.66	NA	NA	NA	NA	NA	NA
		NRC - Electronic Svc Order, per LSR	SOMEC	NA	NA	$3.50	NA	NA	NA	NA	NA	NA
		NRC - DS3 Channelization - Incremental Charge--Manual Svc Order - 1st	SOMAN	NA	NA	$50.72	NA	NA	NA	NA	NA	NA
		NRC - DS3 Channelization - Incremental Charge--Manual Svc Order - Add'l	SOMAN	NA	NA	$38.45	NA	NA	NA	NA	NA	NA
		NRC - DS3 Channelization - Incremental Charge--Manual Svc Order - Disconnect - 1s	SOMAN	NA	NA	$30.09	NA	NA	NA	NA	NA	NA
		NRC - DS3 Channelization - Incremental Charge--Manual Svc Order - Disconnect - A	SOMAN	NA	NA	$18.56	NA	NA	NA	NA	NA	NA
		NRC-All Existing Combination "Switch As Is" Conversion Charge (Note 6)										
		NRC-DS3/STS-1 COMBINATION - "Switch As Is" Conversion Charge - 1st	UNCCC	$54.03	$32.75	$58.43	$54.09	$54.23	$54.09	$54.00	$54.26	$54.13
		NRC-DS3/STS-1 COMBINATION - "Switch As Is" Conversion Charge - Add'l	UNCCC	$32.11	$32.75	$26.99	$32.16	$32.24	$32.16	$32.10	$32.25	$32.17
		NRC- DS3/STS-1 COMBINATION - "Switch As Is" Conversion Charge - Disconnect -	UNCCC	$0.00	$16.77	$12.61	$0.00	$0.00	$0.00	$0.00	$0.00	$0.00
		NRC- DS3/STS-1 COMBINATION - "Switch As Is" Conversion Charge - Disconnect -	UNCCC	$0.00	$16.77	$12.61	$0.00	$0.00	$0.00	$0.00	$0.00	$0.00

BELLSOUTH/API RATES
NETWORK ELEMENTS
AND OTHER SERVICES

New EEL rates are the sum of the individual UNE network elements (interoffice transport and loop [channelization if applicable].										
DS1 Channelization										
DS1 Channelized System per month	MQ1	$136.82	$154.74	$126.22	$200.01	$209.87	$146.87	$177.72	$147.51	$165.21
OCU-DP(data) interface card per month (2.4-64kbs)	1D1DD	$1.66	$2.22	$1.86	$2.94	$3.12	$2.86	$2.88	$2.34	$2.46
VG interface card per month	1D1VG	$0.8586	$1.46	$1.17	$1.40	$1.62	$1.45	$1.64	$1.47	$1.25
2-wire ISDN(BRITE card) per month	UC1CA	$3.41	$3.86	$3.71	$4.04	$4.18	$3.88	$3.76	$4.21	$3.33
NRC - Ordinarily Combined in GA (Note 5)										
NRC - DS1 Channelization - 1st	MQ1	NA	NA	$206.09	NA	NA	NA	NA	NA	NA
NRC - DS1 Channelization - Add'l	MQ1	NA	NA	$137.06	NA	NA	NA	NA	NA	NA
NRC - Channel Activation VG - 1st	1D1VG	NA	NA	$12.02	NA	NA	NA	NA	NA	NA
NRC - Channel Activation VG - Add'l	1D1VG	NA	NA	$8.66	NA	NA	NA	NA	NA	NA
NRC - Channel Activation OCU-DP- 1st	1D1DD	NA	NA	$12.02	NA	NA	NA	NA	NA	NA
NRC - Channel Activation OCU-DP- Add'l	1D1DD	NA	NA	$8.66	NA	NA	NA	NA	NA	NA
NRC - Channel Activation BRITE - 1st	UCICA	NA	NA	$12.02	NA	NA	NA	NA	NA	NA
NRC - Channel Activation BRITE - Add'l	UCICA	NA	NA	$8.66	NA	NA	NA	NA	NA	NA
NRC - Electronic Svc Order, per LSR	SOMEC	NA	NA	$3.50	NA	NA	NA	NA	NA	NA
NRC - DS1 Channelization - Incremental Charge--Manual Svc Order - 1st	SOMAN	NA	NA	$14.75	NA	NA	NA	NA	NA	NA
NRC - DS1 Channelization - Incremental Charge--Manual Svc Order - Add'l	SOMAN	NA	NA	$6.55	NA	NA	NA	NA	NA	NA
NRC - DS1 Channelization - Incremental Charge--Manual Svc Order - Disconnect - 1s	SOMAN	NA	NA	$10.70	NA	NA	NA	NA	NA	NA
NRC - DS1 Channelization - Incremental Charge--Manual Svc Order - Disconnect - A	SOMAN	NA	NA	$0.00	NA	NA	NA	NA	NA	NA
NRC-All Existing Combination "Switch As Is" Conversion Charge (Note 6)										
NRC-DS1 COMBINATION - "Switch As Is" Conversion Charge - 1st	UNCCC	$54.03	$32.75	$58.43	$54.09	$54.23	$54.09	$54.00	$54.26	$54.13
NRC-DS1 COMBINATION - "Switch As Is" Conversion Charge - Add'l	UNCCC	$32.11	$32.75	$26.99	$32.16	$32.24	$32.16	$32.10	$32.25	$32.17
NRC- DS1 COMBINATION - "Switch As Is" Conversion Charge - Disconnect - 1st	UNCCC	$0.00	$16.77	$12.61	$0.00	$0.00	$0.00	$0.00	$0.00	$0.00
NRC- DS1 COMBINATION - "Switch As Is" Conversion Charge - Disconnect - Add'l	UNCCC	$0.00	$16.77	$12.61	$0.00	$0.00	$0.00	$0.00	$0.00	$0.00
Access to DCS - Customer Reconfiguration (FlexServ)										
DS1 DSC Termination with DS0 Switching		TBD	$28.72	$22.86	TBD	TBD	TBD	TBD	TBD	TBD
DS1 DSC Termination with DS1 Switching		TBD	$12.23	$8.64	TBD	TBD	TBD	TBD	TBD	TBD
DS3 DSC Termination with DS1 Switching		TBD	$154.31	$151.85	TBD	TBD	TBD	TBD	TBD	TBD
NRC - Ordinarily Combined in GA:										
NRC - Customer Configuration Establishment		TBD	$2.97	$2.91	TBD	TBD	TBD	TBD	TBD	TBD
NRC - Customer Configuration Establishment - Disconnect		TBD	$3.44	$3.36	TBD	TBD	TBD	TBD	TBD	TBD
NRC- DS1 DSC Termination with DS0 Switching - 1st		TBD	$51.50	$32.07	TBD	TBD	TBD	TBD	TBD	TBD
NRC- DS1 DSC Termination with DS0 Switching - Add'l		TBD	$39.64	$31.49	TBD	TBD	TBD	TBD	TBD	TBD
NRC- DS1 DSC Termination with DS0 Switching - Disconnect - 1st		TBD	$31.06	$20.16	TBD	TBD	TBD	TBD	TBD	TBD
NRC- DS1 DSC Termination with DS0 Switching - Disconnect - Add'l		TBD	$24.98	$20.16	TBD	TBD	TBD	TBD	TBD	TBD
NRC- DS1 DSC Termination with NRC- DS1 Switching - 1st		TBD	$37.23	$18.07	TBD	TBD	TBD	TBD	TBD	TBD
NRC- DS1 DSC Termination with NRC- DS1 Switching - Add'l		TBD	$25.36	$17.49	TBD	TBD	TBD	TBD	TBD	TBD
NRC- DS1 DSC Termination with NRC- DS1 Switching - Disconnect - 1st		TBD	$22.81	$12.10	TBD	TBD	TBD	TBD	TBD	TBD
NRC- DS1 DSC Termination with NRC- DS1 Switching - Disconnect - Add'l		TBD	$16.73	$12.10	TBD	TBD	TBD	TBD	TBD	TBD
NRC- DS3 DSC Termination with DS1 Switching - 1st		TBD	$51.50	$32.07	TBD	TBD	TBD	TBD	TBD	TBD
NRC- DS3 DSC Termination with DS1 Switching - Add'l		TBD	$39.64	$31.49	TBD	TBD	TBD	TBD	TBD	TBD
NRC- DS3 DSC Termination with DS1 Switching - Disconnect - 1st		TBD	$31.06	$20.16	TBD	TBD	TBD	TBD	TBD	TBD
NRC- DS3 DSC Termination with DS1 Switching - Disconnect - Add'l		TBD	$24.98	$20.16	TBD	TBD	TBD	TBD	TBD	TBD
NRC-All Existing Combination "Switch As Is" Conversion Charge (Note 6)										
NRC-DCS COMBINATION - "Switch As Is" Conversion Charge - 1st	UNCCC	$54.03	$32.75	$58.43	$54.09	$54.23	$54.09	$54.00	$54.26	$54.13
NRC-DCS COMBINATION - "Switch As Is" Conversion Charge - Add'l	UNCCC	$32.11	$32.75	$26.99	$32.16	$32.24	$32.16	$32.10	$32.25	$32.17
NRC- DCS COMBINATION - "Switch As Is" Conversion Charge - Disconnect - 1st	UNCCC	$0.00	$16.77	$12.61	$0.00	$0.00	$0.00	$0.00	$0.00	$0.00
NRC- DCS COMBINATION - "Switch As Is" Conversion Charge - Disconnect - Add'l	UNCCC	$0.00	$16.77	$12.61	$0.00	$0.00	$0.00	$0.00	$0.00	$0.00
Node (Synchronet)										
Node per month	UNCNT	$15.77	$16.35	$13.98	$18.11	$15.43	$16.15	$16.00	$14.55	$17.11
NRC - Ordinarily Combined in GA:										
NRC - Node - 1st	UNCNT	NA	NA	$47.19	NA	NA	NA	NA	NA	NA

BELLSOUTH/API RATES
NETWORK ELEMENTS
AND OTHER SERVICES

		New EEL rates are the sum of the individual UNE network elements (interoffice transport and loop [channelization if applicable].									
		NRC - Node - Add'l	UNCNT	NA	NA	$4.47	NA	NA	NA	NA	NA	NA
		NRC - Node - Disconnect - 1st	UNCNT	NA	NA	$13.81	NA	NA	NA	NA	NA	NA
		NR C - Node - Disconnect - Add'l	UNCNT	NA	NA	$3.95	NA	NA	NA	NA	NA	NA
		NRC - Node - Incremental Charge - Manual Service Order - 1st	SOMAN	NA	NA	$21.73	NA	NA	NA	NA	NA	NA
		NRC - Node - Incremental Charge - Manual Service Order - Add'l	SOMAN	NA	NA	NA	NA	NA	NA	NA	NA	NA
		NRC - Node - Incremental Charge - Manual Service Order - Disconnect -1st	SOMAN	NA	NA	$3.87	NA	NA	NA	NA	NA	NA
		NRC - Node - Incremental Charge - Manual Service Order - Disconnect - Add'l	SOMAN	NA	NA	NA	NA	NA	NA	NA	NA	NA
		NRC-All Existing Combination "Switch As Is" Conversion Charge (Note 6)									
		NRC-Node - "Switch As Is" Conversion Charge - 1st	UNCCC	$54.03	$32.75	$58.43	$54.09	$54.23	$54.09	$54.00	$54.26	$54.13
		NRC-Node - "Switch As Is" Conversion Charge - Add'l	UNCCC	$32.11	$32.75	$26.99	$32.16	$32.24	$32.16	$32.10	$32.25	$32.17
		NRC- Node - "Switch As Is" Conversion Charge - Disconnect - 1st	UNCCC	$0.00	$16.77	$12.61	$0.00	$0.00	$0.00	$0.00	$0.00	$0.00
		NRC- Node - "Switch As Is" Conversion Charge - Disconnect - Add'l	UNCCC	$0.00	$16.77	$12.61	$0.00	$0.00	$0.00	$0.00	$0.00	$0.00
		Optional Features & Functions:									
		NRC - Clear Channel Capability (B8ZS/ESF) Option - Subsequent - per DS1 Channel	CCOEF	$184.85	$184.92	$184.62	$184.91	$184.65	$184.60	$184.76	$185.26	$185.16
		NRC - Clear Channel Capability (B8ZS/ESF) Option - Subsequent - per DS1 Channel	CCOEF	$23.81	$23.82	$23.78	$23.82	$23.70	$23.78	$23.60	$23.86	$23.85
		NRC - Clear Channel Capability (B8ZS/ESF) Option - Subsequent - per DS1 Channel	CCOEF	$1.99	$2.07	$2.03	$1.99	$1.97	$1.96	$1.99	$1.99	$2.03
		NRC - Clear Channel Capability (B8ZS/ESF) Option - Subsequent - per DS1 Channel	CCOEF	$0.77	$0.80	$0.79	$0.78	$0.77	$0.76	$0.78	$0.78	$0.79
		NRC - Clear Channel Capability (B8ZS/ESF) Option - Subsequent - Manual Service C	SOMAN	$29.23	$21.73	$29.33	$29.24	$29.20	$29.33	$29.33	$29.33	$29.33
		NRC - Clear Channel Capability (B8ZS/ESF) Option - Subsequent - Manual Service C	SOMAN	$3.93	$3.87	$3.93	$3.94	$3.92	$3.93	$3.93	$3.93	$3.93
		NRC - Clear Channel Capability (B8ZS/SF) Option - Subsequent - per DS1 Channel -	CCOSF	$184.85	$184.92	$184.62	$184.91	$184.65	$184.60	$184.76	$185.26	$185.16
		NRC - Clear Channel Capability (B8ZS/ESF) Option - Subsequent - per DS1 Channel	CCOSF	$23.81	$23.82	$23.78	$23.82	$23.70	$23.78	$23.60	$23.86	$23.85
		NRC - Clear Channel Capability (B8ZS/SF) Option - Subsequent - per DS1 Channel -	CCOSF	$1.99	$2.07	$2.03	$1.99	$1.97	$1.96	$1.99	$1.99	$2.03
		NRC - Clear Channel Capability (B8ZS/ESF) Option - Subsequent - per DS1 Channel	CCOSF	$0.77	$0.80	$0.79	$0.78	$0.77	$0.76	$0.78	$0.78	$0.79
		NRC - Clear Channel Capability (B8ZS/SF) Option - Subsequent - Manual Service Or	SOMAN	$29.23	$21.73	$29.33	$29.24	$29.20	$29.33	$29.33	$29.33	$29.33
		NRC - Clear Channel Capability (B8ZS/ESF) Option - Subsequent - Manual Service C	SOMAN	$3.93	$3.87	$3.93	$3.94	$3.92	$3.93	$3.93	$3.93	$3.93
	Notes :										
		Interim rates subject to true-up.									
	1	Geographically Deaveraged UNE Zones and applicable rates have been established for certain services, as shown in this Agreement. Where Geographically Deaveraged UNE Zones and applicable rates are established, Statewide rates are obsolete. Further, BellSouth is in the process of enhancing its billing systems in order to accomodate this Geographically Deaveraged UNE Zone Rate Structure. Until these enhancements are accomplished, estimated to be mid 2001, the UNE Zone 1 rate will be billed for all services residing in Zones 1, 2, 3 or 4, i.e., Rates for services residing in UNE Zones 2, 3 and UNE Zone 4, where applicable, will not be billed. Once billing enhancements are complete, all applicable UNE Zone rates reflected in this Agreement will be billed. Reference Internet Website http://www.interconnection.bellsouth.com/become_clec/ docs/interconnection/deavuzns.pdf to view Geographically Deaveraged UNE Zone Designations by Central Office.										
	2	New EELs will only be available in the State of Georgia and in density Zone 1 of the following MSAs in the BellSouth Region:									
		Florida - Miami, Orlando, Ft. Lauderdale									
		Louisiana - New Orleans									
		N. Carolina - Greensboro, Charlotte									
		Tennessee - Nashville									
	3	Unapproved rates are subject to true up.									
	4	Add together the recurring rates of all the applicable network elements in order to obtain total monthly recurring rate.									
		* Examples:									
		- 2-wire VG Loop + Voice Grade Interface Card + DS1 Channelization System + DS1 Interoffice Channel									
		- DS1 Loop + DS1 Interface Card + DS3 Channelization System + DS3 Interoffice Channel									

BELLSOUTH/API RATES
NETWORK ELEMENTS
AND OTHER SERVICES

			New EEL rates are the sum of the individual UNE network elements (interoffice transport and loop [channelization if applicable].									
			- DS3 Local Channel + DS3 Interoffice Channel + DS3 Channelization System + DS1 Interface Card									
		5	The Ordinarily Combined in GA NRC applies to new combinations within the State of Georgia.									
		6	The "Switch As Is" NRC is a conversion charge. One SAI charge is applicable per circuit.									

BELLSOUTH/API RATES
NETWORK ELEMENTS
AND OTHER SERVICES

DESCRIPTION	USOC	AL	FL	GA	KY	LA	MS	NC	SC	TN
Operational Support Systems										
Recovery of incremental OSS costs, per CLP, per month		NA	NA	NA	NA	NA	NA	$305.00	NA	NA
RC - OSS OLEC Daily Usage File: Recording, Per Message		$0.0002	$0.008	$0.0001275	$0.0008611	$0.00019	$0.0001179	$0.0003	$0.0002862	$0.008
RC- OSS OLEC Daily Usage File: Message Processing, Per Message		$0.0033	$0.004	$0.0082548	$0.0032357	$0.0024	$0.0032089	$0.0032	$0.0032344	$0.004
RC - OSS OLEC Daily Usage File: Message Distribution, Per Magnetic Tape		$55.19	$54.95	$28.85	$55.68	$47.3000	$54.62	$54.61	$54.72	$54.95
RC - OSS OLEC Daily Usage File: Data Transmission (CONNECT:DIRECT), Per		$0.00004	$0.001	$0.0000434	$0.0000365	$0.0000300	$0.0000354	$0.00004	$0.0000357	$0.001
Access Daily Usage File (ADUF)										
RC - ADUF, Message Processing, per message		$0.004	$0.004	$0.0136327	$0.004	$0.004	$0.004	$0.004	$0.004	$0.004
RC - ADUF, Message Distribution, per Magnetice Tape provisioned		NA	NA	NA	NA	NA	NA	NA	NA	NA
RC - ADUF, Data Transmision (CONNECT:DIRECT), per message		$0.001	$0.001	$0.0000434	$0.001	$0.0000305	$0.001	$0.001	$0.001	$0.001
Enhanced Optional Daily Usage File (EODUF)										
Enhanced Optional Daily Usage File: Message Processing , Per Message		$0.004	$0.004	$0.0034555	$0.004	$0.004	$0.004	$0.004	$0.004	$0.004
Enhanced Optional Daily Usage File: Message Processing, per magnetic tape		NA	NA	NA	NA	NA	NA	NA	NA	NA
Enhanced Optional Daily Usage File: Data Transmision (CONNECT:DIRECT), per		NA	NA	NA	NA	NA	NA	NA	NA	NA
SWA 8XX Toll Free Dialing Ten Digit Screening Service (Note 1)										
8XX Access Ten Digit Screening (all types), per call (Note 2)	N/A	$0.0005	$0.0006531	$0.0004868	NA	$0.0005305	$0.0005321	$0.00050	$0.0005227	$0.0005192
8XX Access Ten Digit Screening Svc. W/8XX No. Delivery										
per query	N/A	NA	NA	NA	$0.0010	NA	NA	$0.00365	NA	NA
for 8XX Numbers, with Optional Complex Features, per query	N/A	NA	NA	NA	$0.0011	NA	NA	$0.00431	NA	NA
8XX Access Ten Digit Screening Svc. W/POTS No. Delivery										
per query	N/A	NA	NA	NA	$0.0010	NA	NA	$0.00383	NA	NA
with Optional Complex Features, per query	N/A	NA	NA	NA	$0.0011	NA	NA	$0.00431	NA	NA
8XX Access Ten Digit Screening Svc. W/800 No. Delivery										
per message	N/A	NA	NA	NA	NA	NA	NA	NA	NA	NA
for 8XX Numbers, w/Optional Complex Features, per message	N/A	NA	NA	NA	NA	NA	NA	NA	NA	NA
8XX Access Ten Digit Screening Svc. W/POTS No. Delivery										
per message	N/A	NA	NA	NA	NA	NA	NA	NA	NA	NA
with Optional Complex Features, per message	N/A	NA	NA	NA	NA	NA	NA	NA	NA	NA
Reservation Charge per 8XX number reserved										
NRC - 1st	N8R1X	$7.13	NA	$6.57	$10.05	$6.29	$8.46	$7.05	$6.38	$30.00
NRC - Addl'l	N8R1X	$0.97	NA	$0.76	$1.19	$0.73	$0.96	$0.96	$0.9583	$0.50
NRC - Incremental Charge - Manual Service Order - 1st	SOMAN	$27.37	NA	$18.94	NA	$18.14	$25.52	$26.94	$27.84	NA
NRC - Incremental Charge - Manual Service Order - Add'l	SOMAN	NA	NA	NA	NA	NA	NA	NA	NA	NA
Per 8XX # Established w/o POTS (w/8XX No.) Translations										
NRC - 1st	N/A	$15.88	NA	$12.81	$30.59	$12.27	$17.04	$23.82	$22.63	$67.50
NRC - Addl'l	N/A	$1.97	NA	$1.45	$3.22	$1.39	$1.93	$2.73	$2.73	$1.50
NRC - Disconnect Charge - 1st	N/A	$10.04	NA	NA	NA	$8.30	$11.32	NA	$42.95	NA
NRC - Disconnect Charge - Add'l	N/A	$0.97	NA	NA	NA	$0.73	$0.96	NA	NA	NA
NRC - Incremental Charge - Manual Service Order - 1st	SOMAN	$27.37	NA	$18.94	NA	$18.14	$25.52	$41.35	NA	NA
NRC - Incremental Charge - Manual Service Order - Add'l	SOMAN	NA	NA	NA	NA	NA	NA	NA	NA	NA
NRC - Incremental Charge - Manual Service Order - Disconnect	SOMAN	$17.75	NA	NA	NA	$11.40	$16.05	NA	NA	NA
Per 8XX # Established with POTS Translations										
NRC - 1st	N8FTX	$15.88	NA	$12.81	$30.59	$12.27	$17.04	$23.82	$22.63	$67.50
NRC - Addl'l	N8FTX	$1.97	NA	$1.45	$3.22	$1.39	$1.93	$2.73	$2.73	$1.50
NRC - Disconnect Charge - 1st	N8FTX	$10.04	NA	NA	NA	$8.30	$11.32	NA	$42.95	NA
NRC - Disconnect Charge - Add'l	N8FTX	$0.97	NA	NA	NA	$0.73	$0.96	NA	NA	NA
NRC - Incremental Charge - Manual Service Order - 1st	SOMAN	$27.37	NA	$18.94	NA	$18.14	$25.52	$41.35	NA	NA
NRC - Incremental Charge - Manual Service Order - Add'l	SOMAN	NA	NA	NA	NA	NA	NA	NA	NA	NA
NRC - Incremental Charge - Manual Service Order - Disconnect	SOMAN	$17.75	NA	NA	NA	$11.40	$16.05	NA	NA	NA
Customized Area of Service per 8XX Number										
NRC - 1st	N8FCX	$5.69	NA	$4.46	$6.97	$4.27	$5.63	$5.63	$5.64	$3.00
NRC - Addl'l	N8FCX	$2.85	NA	$2.23	$3.49	$2.14	$2.81	$2.82	$2.82	$1.50
NRC - Incremental Charge - Manual Service Order - 1st	SOMAN	NA	NA	NA	NA	NA	NA	NA	NA	NA
NRC - Incremental Charge - Manual Service Order - Add'l	SOMAN	NA	NA	NA	NA	NA	NA	NA	NA	NA

BELLSOUTH/API RATES
NETWORK ELEMENTS
AND OTHER SERVICES

DESCRIPTION	USOC	AL	FL	GA	KY	LA	MS	NC	SC	TN
Multiple Inter LATA Carrier Routing per Carrier Requested per 8XX #										
NRC - 1st	N8FMX	$6.66	NA	$5.22	$8.16	$5.00	$6.59	$6.59	$6.60	$3.50
NRC - Addl'l	N8FMX	$3.81	NA	$2.99	$4.67	$2.86	$3.77	$3.77	$3.78	$2.00
NRC - Incremental Charge - Manual Service Order - 1st	SOMAN	NA	NA	NA	NA	NA	NA	NA	NA	NA
NRC - Incremental Charge - Manual Service Order - Add'l	SOMAN	NA	NA	NA	NA	NA	NA	NA	NA	NA
Change Charge per request										
NRC - 1st	N8FAX	$8.10	NA	$7.33	$11.24	$7.01	$9.42	$8.01	$7.34	$48.50
NRC - Addl'l	N8FAX	$0.97	NA	$0.76	$1.19	$0.73	$0.96	$0.96	$0.9583	$0.50
NRC - Incremental Charge - Manual Service Order - 1st	SOMAN	$27.37	NA	$18.94	NA	$18.14	$25.52	$26.94	$27.84	NA
NRC - Incremental Charge - Manual Service Order - Add'l	SOMAN	NA	NA	NA	NA	NA	NA	NA	NA	NA
Call Handling and Destination Features										
NRC - 1st	N8FDX	$5.69	NA	$4.72	$6.97	$4.27	$5.63	$5.63	$5.64	$3.00
NRC - Add'l	N8FDX	NA	NA	$4.46	$6.97	$4.27	$5.63	NA	$5.64	$3.00
LINE INFORMATION DATABASE ACCESS (LIDB)										
LIDB Common Transport per query	OQT	$0.00004	$0.0003	$0.0000338	$0.00006	$0.0000418	$0.0000446	$0.0003	$0.0000442	$0.0003
LIDB Validation per query	OQU	$0.041003	$0.041003	$0.0105974	$0.00938	$0.0103774	$0.0142132	$0.013400	$0.0141003	$0.041003
LIDB Originating Point Code Establishment or Change - NRC	N/A	$64.36	NA	$50.30	$107.60	$48.17	$63.63	$91.00	$61.62	NA
NRC - Incremental Charge - Electronic Service Order		NA	NA	NA	NA	NA	NA	$62.26	NA	NA
NRC - Incremental Charge - Manual Service Order - 1st	SOMAN	$25.93	NA	$18.94	NA	$18.14	$25.52	$26.94	$27.84	$91.00
NRC - Incremental Charge - Manual Service Order - Add'l	SOMAN	NA	NA	NA	NA	NA	NA	NA	$27.84	NA
CCS7 SIGNALING TRANSPORT SERVICE										
CCS7 Signaling Connection, per link (A link) per month		$18.79	$5.00	$17.05	$16.31	$19.48	$21.58	$155.00	$21.79	$155.00
NRC		$171.98	$400.00	$131.96	$354.95	$126.34	$169.72	$510.00	$277.07	$510.00
NRC - Disconnect		$135.70	NA	NA	NA	$101.10	$134.08	NA	$42.95	NA
NRC - Incremental Charge - Manual Service Order	SOMAN	$25.93	NA	$18.94	NA	$18.14	$25.52	NA	NA	NA
NRC - Incremental Charge - Manual Service Order - Disconnect	SOMAN	$16.31	NA	NA	NA	$11.40	$16.05	NA	NA	NA
CCS7 Signaling Connection, per link (B link) (also known as D link) per month		$18.79	$5.00	$17.05	$16.31	$19.48	$21.58	$155.00	$21.79	Not available
NRC		$171.98	$400.00	$131.96	$354.95	$126.34	$169.72	$510.00	$277.07	$510.00
NRC - Disconnect		$135.70	NA	NA	NA	$101.10	$134.08	NA	$42.95	NA
NRC - Incremental Charge - Manual Service Order	SOMAN	$25.93	NA	$18.94	NA	$18.14	$25.52	NA	NA	NA
NRC - Incremental Charge - Manual Service Order - Disconnect	SOMAN	$16.31	NA	NA	NA	$11.40	$16.05	NA	NA	NA
CCS7 Signaling Termination, per STP port per month		$148.72	$113.00	$133.99	$174.08	$161.99	$161.12	$132.88	$156.33	$355.00
CCS7 Signaling Usage, per ISUP message		$0.00004	$0.00001	$0.0000354	$0.000037893	$0.0000430	$0.0000456	$0.00004	$0.0000452	$0.000023
(applicable when measurement and billing capability exists.)										
CCS7 Signaling Usage, per TCAP message		$0.0001	$0.00004	$0.0000870	$0.000102042	$0.0001052	$0.0001115	$0.00009	$0.0001108	$0.00005
(applicable when measurement and billing capability exists.)										
CCS7 Signaling Usage Surrogate, per link per LATA per mo (9)		$376.12	$64.00	$340.67	$329.98	$406.71	$406.53	$338.98	$396.55	$395.00
CCS7 Signaling Point Code, Establishment or Change, per STP affected										
NRC		$62.00	$62.00	$62.00	$62.00	$62.00	$62.00	$62.00	$62.00	$62.00
OPERATOR CALL PROCESSING										
Operator Provided Call Handling per min - Using BST LIDB	N/A	$1.21	$1.00	$0.9680296	$1.6016	$0.91	$1.19	$1.20	$1.21	NA
Call Completion Access Termination Charge per call attempt	N/A	$0.08	NA	NA	NA	NA	NA	NA	$0.08	NA
Operator Provided Call Handling per min - Using Foreign LIDB	N/A	$1.25	$1.00	$1.02	$1.6249	$0.96	$1.24	$1.24	$1.25	NA
Call Completion Access Termination Charge per call attempt	N/A	$0.08	NA	NA	NA	NA	NA	NA	$0.08	NA
Operator Provided Call Handling, per call	N/A	NA	NA	NA	NA	NA	NA	NA	NA	$0.30
Fully Automated Call Handling per call - Using BST LIDB	N/A	$0.11	$0.10	$0.0776409	$0.0856	$0.10	$0.1072884	$0.11	$0.1115808	$0.15
Fully Automated Call Handling per call - Using Foreign LIDB	N/A	$0.13	$0.10	$0.0976984	$0.1071	$0.12	$0.1253666	$0.12	$0.1293459	$0.15
Professional recording of name (OCP alone)	USOD1	$7,000.00	$7,000.00	$7,000.00	$7,000.00	$7,000.00	$7,000.00	$7,000.00	$7,000.00	$7,000.00
Professional recording of name (DA and OCP alone)	USOD1	$7,000.00	$7,000.00	$7,000.00	$7,000.00	$7,000.00	$7,000.00	$7,000.00	$7,000.00	$7,000.00
DRAM or front-end loading, per TOPS switch	USOD2	$250.00	$250.00	$250.00	$250.00	$250.00	$250.00	$250.00	$250.00	$250.00
AABS or back-end loading, per IVS	USOD2	$225.00	$225.00	$225.00	$225.00	$225.00	$225.00	$225.00	$225.00	$225.00
EBAS or 0- automation loading, per NAV shelf	USOD2	$270.00	$270.00	$270.00	$270.00	$270.00	$270.00	$270.00	$270.00	$270.00
Recording Charge per Branded Announcement – Disconnect – Initial	N/A	$9.61	NA	NA	NA	NA	NA	NA	NA	NA

BELLSOUTH/API RATES
NETWORK ELEMENTS
AND OTHER SERVICES

DESCRIPTION	USOC	AL	FL	GA	KY	LA	MS	NC	SC	TN
Recording Charge per Branded Announcement – Disconnect – Subsequent	N/A	$9.61	NA	NA	NA	NA	NA	NA	NA	NA
INWARD OPERATOR SERVICES										
Verification, per minute	N/A	$1.16	NA	$0.921083	NA	$0.86	$1.14	$1.15	$1.15	NA
Verification and Emergency Interrupt, per minute	N/A	$1.16	NA	$0.921083	NA	$0.86	$1.14	$1.15	$1.15	NA
Verification, per call	VIL	NA	$0.80	NA	$1.00	NA	NA	$0.54	NA	$0.90
Verification and Emergency Interrupt, per call	N/A	NA	$1.00	NA	$1.111	NA	NA	$0.65	NA	$1.95
DIRECTORY ASSISTANCE SERVICES										
Directory Assist Call Completion Access Svc (DACC), per call attempt	N/A	$0.10	$0.10	$0.10	$0.10	$0.10	$0.10	$0.062	$0.10	$0.10
Call Completion Access Term charge per completed call	N/A	NA	NA	NA	NA	NA	NA	NA	$0.08	NA
Number Services Intercept per query	N/A	$0.0235	$0.01	$0.0097497	$0.0086	$0.02	$0.0188268	$0.0110	$0.0124036	$0.15
Number Services Intercept per Intercept Query Update	N/A	NA	NA	NA	$0.0055	NA	NA	NA	NA	NA
Directory Assistance Access Service Calls, per call	N/A	$0.275	$0.275	$0.275	$0.275	$0.275	$0.275	$0.260000	$0.275	$0.275
Professional recording of name (DA alone)	N/A	$3,000.00	$3,000.00	$3,000.00	$3,000.00	$3,000.00	$3,000.00	$3,000.00	$3,000.00	$3,000.00
Professional recording of name (DA and OCP alone)	N/A	$7,000.00	$7,000.00	$7,000.00	$7,000.00	$7,000.00	$7,000.00	$7,000.00	$7,000.00	$7,000.00
DRAM or front-end loading, per TOPS switch	N/A	$250.00	$250.00	$250.00	$250.00	$250.00	$250.00	$250.00	$250.00	$250.00
AABS or back-end loading, per IVS	N/A	$225.00	$225.00	$225.00	$225.00	$225.00	$225.00	$225.00	$225.00	$225.00
EBAS or 0- automation loading, per NAV shelf	N/A	$270.00	$270.00	$270.00	$270.00	$270.00	$270.00	$270.00	$270.00	$270.00
Recording Charge per Branded Announcement – Disconnect – Initial	N/A	$9.61	NA	NA	NA	NA	NA	NA	NA	NA
Recording Charge per Branded Announcement – Disconnect – Subsequent	N/A	$9.61	NA	NA	NA	NA	NA	NA	NA	NA
Directory Transport										
Directory Transport - Local Channel DS1, per month	N/A	$35.52	$43.64	$38.36	$36.32	$43.83	$38.91	$35.68	$37.20	$133.81
NRC - 1st	N/A	$503.57	$242.45	$356.15	$637.46	$339.69	$494.83	$534.48	$534.81	$868.97
NRC - Add'l	N/A	$442.84	$226.44	$312.89	$546.94	$298.29	$435.28	$462.69	$462.81	$486.83
NRC - Disconnect Charge - 1st	N/A	$46.28	NA	NA	NA	$33.02	$46.85	NA	NA	NA
NRC - Disconnect Charge - Add'l	N/A	$32.18	NA	NA	NA	$23.32	$33.02	NA	NA	NA
NRC - Incremental Charge-Manual Svc Order - NRC - 1st	SOMAN	$61.99	NA	$44.22	NA	$42.34	$59.58	$86.15	$87.99	NA
NRC - Incremental Charge-Manual Svc Order - NRC -addl		NA	NA	NA	NA	NA	NA	$1.77	NA	NA
NRC - Incremental Charge-Manual Svc Order - NRC-Disconnect	SOMAN	$29.27	NA	NA	NA	$19.48	$27.41	NA	$3.11	NA
Directory Transport - Dedicated DS1 Level Interoffice per mile per mo	N/A	$0.6923	$0.6013	$0.4523	$0.45	$0.78	$0.6598	$0.5753	$0.7598	$23.00
Directory Transport - Dedicated DS1 Level Interoffice per facility termination per mo	N/A	$79.69	$99.79	$78.47	$55.05	$93.40	$74.40	$71.29	$94.98	$90.00
NRC - 1st	N/A	$198.15	$45.91	$147.07	$298.18	$140.49	$196.28	$217.17	$216.27	$100.49
NRC - Add'l	N/A	$148.18	$44.18	$111.75	$231.18	$106.69	$147.31	$163.75	$162.70	$100.49
NRC - Disconnect Charge - 1st	N/A	$25.44	NA	NA	NA	$20.00	$26.56	NA	NA	NA
NRC - Disconnect Charge - Add'l	N/A	$20.42	NA	NA	NA	$16.34	$21.61	NA	NA	NA
NRC - Incremental Charge - Manual Service Order - 1st	SOMAN	$27.37	NA	$18.94	NA	$18.14	$25.52	$38.07	$39.63	NA
NRC - Incremental Charge - Manual Service Order - Add'l	SOMAN	$27.37	NA	NA	NA	$18.14	$25.52	$38.07	$39.63	NA
NRC - Incremental Charge - Manual Service Order - Disconnect - 1st	SOMAN	$12.97	NA	NA	NA	$8.06	$11.34	NA	NA	NA
NRC - Incremental Charge - Manual Service Order - Disconnect - Add'l	SOMAN	$12.97	NA	NA	NA	$8.06	$11.34	NA	NA	NA
Switched Common Transport per DA Access Service per call	N/A	$0.0003	$0.0003	$0.0002906	$0.000175	$0.0003274	$0.0002997	$0.00020	$0.000327	NA
Switched Common Transport per DA Access Service per call per mile	N/A	$0.00003	$0.00001	$0.0000186	$0.000004	$0.0000175	$0.0000202	$0.00003	$0.0000303	NA
Access Tandem Switching per DA Access Service per call	N/A	$0.0023	$0.00055	$0.0019152	$0.000783	$0.0025257	$0.0023713	$0.0021	$0.0024809	NA
DA Interconnection, per DA Access Service Call	N/A	$0.00269	NA	$0.00269	NA	NA	NA	$0.00	$0.000269	NA
Directory Transport-Installation NRC, per trunk or signaling connection	N/A									
NRC - 1st	N/A	$260.69	$206.06	$204.23	$501.98	$195.54	$257.73	NA	$407.81	NA
NRC - Add'l	N/A	$5.95	$4.71	$4.42	$13.32	$4.23	$5.85	NA	$11.00	NA
NRC - Disconnect Charge - 1st	N/A	$173.46	NA	NA	NA	NA	NA	NA	NA	NA
NRC - Disconnect Charge - Add'l	N/A	$5.95	NA	NA	NA	NA	NA	NA	NA	NA
NRC - Incremental Charge - Manual Service Order - 1st	SOMAN	NA	NA	$44.22	NA	$130.05	$171.49	NA	NA	NA
NRC - Incremental Charge - Manual Service Order - Add'l	SOMAN	NA	NA	NA	NA	$4.23	$5.85	NA	NA	NA
NRC - Manual Service Order - 1st		NA	NA	NA	NA	NA	NA	$407.53	NA	NA
NRC - Manual Service Order - Add'l		NA	NA	NA	NA	NA	NA	$10.98	NA	NA
Directory Assistance Database Service (DADS)										
Directory Assistance Database Service charge per listing	N/A	$0.0446	$0.001	$0.0445	$0.0193	$0.0443	$0.0447	$0.04460	$0.0444	NA

BELLSOUTH/API RATES
NETWORK ELEMENTS
AND OTHER SERVICES

DESCRIPTION	USOC	AL	FL	GA	KY	LA	MS	NC	SC	TN
Directory Assistance Database Service, per month	DBSOF	$128.55	$100.00	$95.50	$120.76	$90.54	$126.17	$126.26	$127.23	NA
AIN (Note 4)										TBD
AIN, per message	CAM	NA	$0.00004	NA	NA	NA	NA	NA	NA	NA
AIN - BellSouth AIN SMS Access Service	CAM								NA	NA
Service Establishment Charge, per state, initial set-up										
NRC	CAMSE	$197.49	NA	$90.25	NA	$153.31	$174.03	$294.77	$296.16	NA
NRC - Disconnect	CAMSE	$114.22	NA	NA	NA	$78.06	$135.96	NA	NA	NA
Port Connection - Dial/Shared Access										
NRC	CAMDP	$64.05	NA	$29.66	NA	$50.07	$53.47	$86.94	$87.29	NA
NRC - Disconnect	CAMDP	$27.04	NA	NA	NA	$18.61	$37.70	NA	NA	NA
Port Connection - ISDN Access										
NRC	CAM1P	$64.05	NA	$29.66	NA	$50.07	$53.47	$86.94	$87.29	NA
NRC - Disconnect	CAM1P	$27.04	NA	NA	NA	$18.61	$37.70	NA	NA	NA
User ID Codes - per User ID Code										
NRC	CAMAU	$141.84	NA	$84.43	NA	$104.95	$129.83	$200.83	$202.08	NA
NRC - Disconnect	CAMAU	$70.05	NA	NA	NA	$48.95	$79.91	NA	NA	NA
Security Card per User ID Code, initial or replacement										
NRC	CAMRC	$142.13	NA	$35.44	NA	$125.33	$131.54	$172.05	$172.26	NA
NRC - Disconnect	CAMRC	$35.26	NA	NA	NA	$24.40	$45.77	NA	NA	NA
Storage, per unit (100Kb)	N/A	$0.0026	NA	$0.0023	NA	$0.0029	$0.0029	$0.0023	$0.0028	NA
Session per minute	N/A	$0.0892	NA	$0.0795604	NA	$0.10	$0.0975650	$0.0791	$0.0942966	NA
C0. Performed Session, per minute					NA	$1.97	$2.09	$2.08	$2.07	NA
AIN - BellSouth AIN Toolkit Service										
AIN, Service Creation Tools	CAMBP	NA	TBD	NA	NA	NA	NA	NA	NA	NA
Service Establishment Charge, per state, initial set-up										
NRC	BAPSC	$192.69	NA	$86.74	NA	$153.25	$169.31	$290.05	$291.41	NA
NRC - Disconnect	BAPSC	$114.22	NA	NA	NA	$78.05	$135.96	NA	NA	NA
Training Session, per customer										
NRC	BAPVX	$8,363.00	NA	$8,348.00	NA	$8,315.00	$8,379.00	$8,363.00	$8,333.00	NA
NRC - Disconnect	BAPVX	NA	NA	NA	NA	NA	NA	NA	NA	NA
Trigger Access Charge, per trigger, per DN, Term. Attempt										
NRC	BAPTT	$49.64	NA	$19.13	NA	$41.08	$39.30	$72.76	$73.02	NA
NRC - Disconnect	BAPTT	$27.04	NA	NA	NA	$18.60	$37.70	NA	NA	NA
Trigger Access Charge, per trigger per DN, Off-Hook Delay										
NRC	BAPTD	$49.64	NA	$114.80	NA	$41.08	$39.30	$72.76	$73.02	NA
NRC - Disconnect	BAPTD	$27.04	NA	NA	NA	$18.60	$37.70	NA	NA	NA
Trigger Access Charge, per trigger, per DN, Off-Hook Immediate										
NRC	BAPTM	$49.64	NA	$19.13	NA	$41.08	$39.30	$72.76	$73.02	NA
NRC - Disconnect	BAPTM	$27.04	NA	NA	NA	$18.60	$37.70	NA	NA	NA
Trigger Access Charge, per trigger, per DN, 10-Digit PODP										
NRC	BAPTO	$117.98	NA	$70.06	NA	$92.99	$106.90	$149.95	$150.25	NA
NRC - Disconnect	BAPTO	$37.90	NA	NA	NA	$26.73	$48.44	NA	NA	NA
Trigger Access Charge, per trigger, per DN, CDP										
NRC	BAPTC	$117.98	NA	$70.06	NA	$92.99	$106.90	$149.95	$150.25	NA
NRC - Disconnect	BAPTC	$37.90	NA	NA	NA	$26.73	$48.44	NA	NA	NA
Trigger Access Charge, per trigger, per DN, Feature Code										
NRC	BAPTF	$117.98	NA	$70.06	NA	$92.99	$106.90	$149.95	$150.25	NA
NRC - Disconnect	BAPTF	$37.90	NA	NA	NA	$26.73	$48.44	NA	NA	NA
Query Charge, per query		$0.024	NA	$0.0209223	NA	$0.03	$0.0256138	$0.02	$0.0250662	NA
Type 1 Node Charge, per AIN Toolkit Subscription, per node, per query		$0.006	NA	$0.0053137	NA	$0.0065	$0.0065161	$0.005	$0.0062979	NA
SCP Storage Charge, per SMS Access Acct, per 100 Kb	N/A	$1.63	NA	$1.46	NA	$1.79	$1.79	$1.45	$1.73	NA
Monthly Report - per AIN Toolkit Service Subscription	BAPMS	$16.00	NA	$15.96	NA	$15.89	$16.01	$15.98	$15.93	NA
NRC	BAPMS	$44.56	NA	$22.64	NA	$34.61	$44.02	$71.80	$72.15	NA

BELLSOUTH/API RATES
NETWORK ELEMENTS
AND OTHER SERVICES

DESCRIPTION	USOC	AL	FL	GA	KY	LA	MS	NC	SC	TN
NRC - Disconnect	BAPMS	$31.84	NA	NA	NA	$21.97	$31.28	NA	NA	NA
Special Study - per AIN Toolkit Service Subscription	BAPLS	$0.10	NA	$0.0861109	NA	$0.08	$0.0810536	$0.08	$0.0872769	NA
NRC	BAPLS	$47.74	NA	$22.64	NA	$37.77	$47.21	$47.20	$47.35	NA
NRC - Disconnect	BAPLS	$15.90	NA	NA	NA	NA	NA	NA	NA	NA
Call Event Report - per AIN Toolkit Service Subscription	BAPDS	$15.90	NA	$15.87	NA	$15.81	$15.93	$15.90	$15.84	NA
NRC	BAPDS	$44.56	NA	$22.64	NA	$34.61	$44.02	$71.80	$72.15	NA
NRC - Disconnect	BAPDS	$31.84	NA	NA	NA	$21.97	$31.28	NA	NA	NA
Call Event special Study - per AIN Toolkit Service Subscription	BAPES	$0.003	NA	$0.0028704	NA	$0.0026	$0.0027018	$0.003	$0.0029092	NA
NRC	BAPES	$47.74	NA	$22.64	NA	$37.77	$47.21	$47.20	$47.35	NA
NRC - Disconnect	BAPES	$15.90	NA	NA	NA	$37.77	NA	NA	NA	NA
CALLING NAME (CNAM) QUERY SERVICE										
CNAM (Database Owner), Per Query	N/A	$0.016	$0.016	$0.016	$0.016	$0.016	$0.016	$0.016	$0.016	$0.016
CNAM (Non-Database Owner), Per Query *	N/A	$0.01	$0.01	$0.01	$0.01	$0.01	$0.01	$0.01	$0.01	$0.01
NRC, applicable when CLEC-1 uses the Character Based User Interface (CHUI)	N/A	$595.00	$595.00	$595.00	$595.00	$595.00	$595.00	$595.00	$595.00	$595.00
* Volume and term arrangements are also available.										
SELECTIVE ROUTING (Note 5)										
Per Line or PBX Trunk, each		NA	NA	NA	$10.00 (Interim	NA	NA	NA	NA	TBD
NRC		NA	NA	NA	NA	NA	NA	NA	NA	TBD
Customized routing per unique line class code, per request, per switch						NA	NA	NA	NA	NA
NRC	USRCR	$230.60	$229.65	$180.62	$229.65	$229.65	$227.99	$229.65	$226.22	$229.65
NRC - Incremental Charge - Manual Service Order		$25.93	NA	$18.94	NA	NA	$25.52	NA	$27.84	NA
VIRTUAL COLLOCATION										
2-wire Cross-Connect										
RC	UEAC2	$0.28	$0.524	$0.30	$0.31	$0.26	$0.3996	$0.09	$0.3648	$0.30
NRC - 1st	UEAC2	$30.76	$11.57	$12.60	$54.21	$23.04	$30.93	$41.78	$41.50	$19.20
NRC - Add'l	UEAC2	$29.40	$11.57	$12.60	$51.07	$22.11	$29.59	$39.23	$38.94	$19.20
NRC - 1st - Manual Service Order		NA	NA	NA	NA	NA	NA	$4.75	NA	NA
NRC - Add'l - Manual Service Order		NA	NA	NA	NA	NA	NA	$4.75	NA	NA
NRC - Disconnect - 1st	UEAC2	$12.75	NA	NA	NA	$9.48	$12.76	NA	NA	NA
NRC - Disconnect - Add'l	UEAC2	$11.38	NA	NA	NA	$8.54	$11.43	NA	NA	NA
4-wire Cross-Connect										
RC	UEAC4	$0.56	$0.524	$0.50	$0.62	$0.52	$0.7992	$0.18	$0.7297	$0.50
NRC - 1st	UEAC4	$66.71	$11.57	$12.60	$54.23	$23.23	$31.17	$41.91	$41.56	$19.20
NRC - Add'l	UEAC4	$50.43	$11.57	$12.60	$50.96	$22.24	$29.77	$39.25	$38.90	$19.20
NRC - 1st - Manual Service Order		NA	NA	NA	NA	NA	NA	$4.73	NA	NA
NRC - Add'l - Manual Service Order		NA	NA	NA	NA	NA	NA	$4.73	NA	NA
NRC - Disconnect - 1st	UEAC4	$12.82	NA	NA	NA	$9.53	$12.83	NA	NA	NA
NRC - Disconnect - Add'l	UEAC4	$11.39	NA	NA	NA	$8.55	$11.43	NA	NA	NA
2-fiber Cross-Connect										
RC	CNC2F	$12.10	NA	$15.64	$15.64	$19.13	$15.64	$15.99	$15.06	$15.64
NRC - 1st	CNC2F	$55.46	NA	$41.56	$41.56	$41.07	$41.56	$67.34	$69.28	$41.56
NRC - Add'l	CNC2F	$39.18	NA	$29.82	$29.82	$29.63	$29.82	$48.55	$48.89	$29.82
NRC - Disconnect - 1st	CNC2F	$16.83	NA	NA	NA	$12.84	$12.96	NA	NA	NA
NRC - Disconnect - Add'l	CNC2F	$13.27	NA	NA	NA	$10.29	$10.34	NA	NA	NA
4-fiber Cross-Connect										
RC	CNC4F	$21.75	NA	$28.11	$28.11	$34.38	$28.11	$28.74	$27.08	$28.11
NRC - 1st	CNC4F	$66.71	NA	$50.53	$50.53	$49.81	$50.53	$82.35	$84.07	$50.53
NRC - Add'l	CNC4F	$50.43	NA	$38.78	$38.78	$38.37	$38.78	$63.56	$63.68	$38.78
NRC - Disconnect - 1st	CNC4F	$21.86	NA	NA	NA	$16.75	$16.97	NA	NA	NA
NRC - Disconnect - Add'l	CNC4F	$18.31	NA	NA	NA	$14.20	$14.35	NA	NA	NA
DS1 Cross-Connects										
RC		NA	NA	NA	NA	NA	NA	$0.97	NA	NA
NRC - 1st		NA	NA	NA	NA	NA	NA	$71.02	NA	NA

BELLSOUTH/API RATES
NETWORK ELEMENTS
AND OTHER SERVICES

	DESCRIPTION	USOC	AL	FL	GA	KY	LA	MS	NC	SC	TN
	NRC - Add'l		NA	NA	NA	NA	NA	NA	$51.08	NA	NA
	NRC - Manual Service Order - 1st		NA	NA	NA	NA	NA	NA	$4.70	NA	NA
	NRC - Manual Service Order - Add'l		NA	NA	NA	NA	NA	NA	$4.70	NA	NA
	DS3 Cross-Connects										
	RC		NA	NA	NA	NA	NA	NA	$12.33	NA	NA
	NRC - 1st		NA	NA	NA	NA	NA	NA	$69.84	NA	NA
	NRC - Add'l		NA	NA	NA	NA	NA	NA	$49.43	NA	NA
	NRC - Manual Service Order - 1st		NA	NA	NA	NA	NA	NA	$4.70	NA	NA
	NRC - Manual Service Order - Add'l		NA	NA	NA	NA	NA	NA	$4.70	NA	NA
	If no rate is identified in the contract, the rate for the specific service or function will be as set forth in applicable BellSouth tariff or as negotiated by the parties upon request by either party.										
	Interim rates subject to true-up.										
1	BellSouth and CLEC shall negotiate rates for this offering. If agreement is not reached within sixty (60) days of the Effective Date, either party may petition the Florida PSC to settle the disputed charge or charges. (FL)										
2	This rate element is for those states w/o separate rates for 800 calls with 800 No. Delivery vs. POTS No. Delivery and calls with Optional Complex Features vs. w/o Optional Complex Features.										
3	This charge is only applicable where signaling usage measurement or billing capability does not exist.										
4	Prices for AIN to be determined upon development of mediation device. (TN)										
5	Price for Line Class Codes for Selective Routing shall be determined by the TRA. (TN)										

Attachment 3

Network Interconnection

TABLE OF CONTENTS

1. Network Interconnection 3

2. Interconnection Trunk Group Architectures 6

3. Network Design And Management For Interconnection 12

4. Local Dialing Parity 16

5. Interconnection Compensation 16

6. Frame Relay Service Interconnection 23

7. Operational Support Systems (OSS) 26

Rates ..... Exhibit A
Basic Architecture ..... Exhibit B
One Way Architecture ..... Exhibit C
Two Way Architecture ..... Exhibit D
Supergroup Architecture ..... Exhibit E

The Parties shall provide interconnection with each other's networks for the transmission and routing of telephone exchange service (local) and exchange access (intraLATA toll and switched access) on the following terms:

1. **Network Interconnection**

All negotiated rates, terms and conditions set forth in this Attachment pertain only to the provision of network interconnection where API owns and provides its switch(es).

1.1 Network Interconnection for Call Transport and Termination may be provided by the Parties at any technically feasible point. Requests to BellSouth for interconnection at points other than as set forth in this Attachment may be made through the Bona Fide Request/New Business Request process set out in General Terms and Conditions.

1.1.1 An Interconnection Point (IP) is the physical telecommunications equipment interface that performs the interconnection function for BellSouth and API. Each Party is responsible for providing the network on its side of the IP. Furthermore, the IP must be located within the LATA in which Local Traffic is originating. The IP determines the point at which the originating Party shall pay the terminating Party for the Call Transport and Termination of that traffic.

1.1.1.1 Pursuant to the provisions of this Attachment, the location of the Interconnection Point shall be established by mutual agreement of the Parties. In selecting the Interconnection Point, both Parties will act in good faith and select the point which is most efficient for both Parties. Each Party shall be responsible for engineering and maintaining the network on its side of the Interconnection Point. Additional Interconnection Points in a particular LATA may be established by mutual agreement of the Parties. If the Parties are unable to agree to a mutual Interconnection Point, each Party will designate the Interconnection Point for its originated traffic. When the Parties mutually agree to utilize two-way interconnection trunk groups for the exchange of local and intraLATA toll traffic between each other, the Parties shall mutually agree to the location of Interconnection Point(s).

1.2 **Interconnection via Dedicated Transport Facilities**

1.2.1 As part of Local Interconnection Call Transport and Termination Service, the originating Party may obtain Local Channel facilities (i.e., entrance facilities) from the terminating Party from the originating Party's specified Interconnection Point to its Serving Wire Center. The portion of Local Channel facilities utilized

for Local Traffic shall be determined based upon the application of the Percent Local Facility (PLF) Factor as defined in this Attachment. Additionally, the charges applied to the portion of the Local Channel used for Local Traffic as determined by the PLF are as set forth in Exhibit A to this Attachment. This factor shall be reported in addition to the switched dedicated transport jurisdictional factors specified in the BellSouth intrastate and interstate switched access tariffs.

1.2.2 Additionally, either Party may obtain Dedicated Interoffice Transport facilities from its designated Serving Wire Center to the other Party's first point of switching. The portion of Dedicated Interoffice Transport facilities utilized for Local Traffic shall be determined based upon the application of the Percent Local Facility (PLF) Factor as defined in this Attachment. Additionally, the charges applied to the portion of the Dedicated Interoffice Transport used for Local Traffic as determined by the PLF are as set forth in Exhibit A to this Attachment. This factor shall be reported in addition to the switched dedicated transport jurisdictional factors specified in the BellSouth intrastate and interstate switched access tariffs.

1.2.3 For the purposes of this Attachment, **Local Channel** (i.e., entrance facility) is defined as a switch transport facility between a Party's Interconnection Point and its Serving Wire Center.

1.2.4 For the purposes of this Attachment, **Serving Wire Center** is defined as the wire center owned by one Party from which the other Party would normally obtain dial tone for its Interconnection Point.

1.2.5 For the purposes of this Attachment, **Dedicated Interoffice Transport** is defined as a switch transport facility between a Party's Serving Wire Center and the first point of switching on the other Party's common (shared) network.

1.3 **Fiber Meet**

1.3.1 **Fiber Meet** is an interconnection arrangement whereby the Parties physically interconnect their networks via an optical fiber interface (as opposed to an electrical interface) at which one Party's facilities, provisioning, and maintenance responsibility begins and the other Party's responsibility ends (i.e. Interconnection Point).

1.3.2 If API elects to interconnect with BellSouth pursuant to a Fiber Meet, API and BellSouth shall jointly engineer and operate a Synchronous Optical Network ("SONET") transmission system by which they shall interconnect their transmission and routing of Local Traffic via a Local Channel facility at either the DS0, DS1, or DS3 level. The Parties shall work jointly to determine the specific transmission system. However, API's SONET transmission must be compatible with BellSouth's equipment in the BellSouth Interconnection Wire Center

(BIWC). The same vendor's equipment and software version must be used, and the Data Communications Channel (DCC) must be turned off.

1.3.3 BellSouth shall, wholly at its own expense, procure, install and maintain the agreed upon SONET equipment in the BIWC.

1.3.4 API shall, wholly at its own expense, procure, install and maintain the agreed upon SONET equipment in the API Interconnection Wire Center ("API Wire Center").

1.3.5 BellSouth shall designate an Interconnection Point outside the BIWC as a Fiber Meet point, and shall make all necessary preparations to receive, and to allow and enable API to deliver, fiber optic facilities into the Interconnection Point with sufficient spare length to reach the fusion splice point at the Interconnection Point. BellSouth shall, wholly at its own expense, procure, install, and maintain the fusion splicing point in the Interconnection Point. A Common Language Location Identification ("CLLI") code will be established for each Interconnection Point. The code established must be a building type code. All orders shall originate from the Interconnection Point (i.e., Interconnection Point to API, Interconnection Point to BellSouth).

1.3.6 API shall deliver and maintain such strands wholly at its own expense. Upon verbal request by API, BellSouth shall allow API access to the Fiber Meet entry point for maintenance purposes as promptly as possible.

1.3.7 The Parties shall jointly coordinate and undertake maintenance of the SONET transmission system. Each Party shall be responsible for maintaining the components of their own SONET transmission system.

1.3.8 Each Party will be responsible for (i) providing its own transport facilities to the Fiber Meet, and (ii) the cost to build-out its facilities to such Fiber Meet.

1.3.9 Neither Party shall charge the other for its portion of the Fiber Meet facility used exclusively for non-transit Local Traffic (i.e. the Local Channel). Charges incurred for other services including dedicated transport facilities will apply. Charges for Switched and Special Access Services shall be billed in accordance with the applicable Access Service tariff (i.e. the BellSouth Interstate or Intrastate Access Services Tariff).

2. Interconnection Trunk Group Architectures

2.1 BellSouth and API shall establish interconnecting trunk groups and trunk group configurations between networks including the establishment of one-way or two-way trunks in accordance with the following provisions set forth in this Agreement**.** For trunking purposes, traffic will be routed based on the digits dialed by the originating end user and in accordance with the Local Exchange Routing Guide (LERG).

2.2 API shall establish an interconnection trunk group(s) to at least one BellSouth access tandem within the LATA for the delivery of API's originated local and intraLATA toll traffic and for the receipt and delivery of Transit Traffic. To the extent API desires to terminate local and intraLATA toll traffic to BellSouth and Transit Traffic to third parties subtending other BellSouth access tandems within the LATA, other than the one API has established interconnection trunk groups to, API shall order Multiple Tandem Access, as described in this Attachment, to such other BellSouth access tandems or order interconnection trunk groups to such other BellSouth access tandems.

2.2.1 Notwithstanding the forgoing, API shall establish an interconnection trunk group(s) to all BellSouth access and local tandems in the LATA where API has homed (i.e. assigned) its NPA/NXXs. API shall home its NPA/NXXs on the BellSouth tandems that serve the Exchange Rate Center Areas to which the NPA/NXXs are assigned. The specified association between BellSouth tandems and Exchange Rate Centers is defined in the national Local Exchange Routing Guide (LERG). API shall enter its NPA/NXX access and/or local tandem homing arrangement into the LERG.

2.3 Switched Access traffic will be delivered to and by Interexchange Carriers (IXCs) based on API's NXX Access Tandem homing arrangement as specified by API in the LERG.

2.4 Any API interconnection request that deviates from the interconnection trunk group architectures as described in this Agreement that affects traffic delivered to API from a BellSouth switch that requires special BellSouth switch translations and other network modifications will require API to submit a Bona Fide Request/New Business Request (BFR/NBR) via the BFR/NBR Process set forth in General Terms and Conditions.

2.5 Charges, both non-recurring and recurring, associated with interconnecting trunk groups between BellSouth and API are set forth in Exhibit A. To the extent a rate associated with the interconnecting trunk group is not set forth in Exhibit A, the interim rate shall be as set forth in the appropriate BellSouth tariff for Switched Access services. Once a cost based rate is established by BellSouth, the interim tariff rate shall be trued up and the cost based rate will be applied retroactively to the effective date of this agreement.

2.6 For two-way trunk groups that carry both Parties' local and IntraLATA Toll traffic only, excluding trunk groups that carry Transit Traffic, the Parties shall be compensated for the nonrecurring and recurring charges for dedicated transport trunks and facilities at 50% of the applicable contractual or tariff rates for the services provided by each Party. API shall be responsible for ordering and paying for any two-way trunks carrying Transit Traffic.

2.7 All trunk groups will be provisioned as Signaling System 7 (SS7) capable where technically feasible. If SS7 is not technically feasible multi-frequency (MF) protocol signaling shall be used.

2.8 In cases where API is also an IXC, the IXC's Feature Group D (FG D) trunk group(s) must remain separate from the local interconnection trunk group(s).

2.9 Unless in response to a blocking situation or for a project, when either Party orders interconnection trunk group augmentations, a Firm Order Confirmation (FOC) shall be returned to the ordering Party within four (4) business days from receipt of a valid, error free ASR. A project is defined as a new trunk group or the request of 96 or more trunks on a single or multiple trunk group(s) in a given local calling area. Blocking situations and projects shall be managed through the BellSouth Interconnection Trunking Project Management group and API's equivalent trunking group.

2.10 **Interconnection Trunk Groups for Exchange of Local, IntraLATA Toll and Transit Traffic**

2.10.1 If the Parties' originated local and/or intraLATA toll traffic is utilizing the same two-way trunk group, the Parties shall mutually agree to use this type of two-way interconnection trunk group with the quantity of trunks being mutually determined and the provisioning being jointly coordinated. Furthermore, the Interconnection Point(s) for two-way interconnection trunk groups transporting both Parties local and/or intraLATA toll shall be mutually agreed upon. API shall order such two-way trunks via the Access Service Request (ASR) process in place for Local Interconnection upon determination by the Parties, in a joint planning meeting, that such trunk groups shall be utilized. BellSouth will use the Trunk Group Service Request (TGSR) to request changes in trunking. Both Parties reserve the right to issue ASRs, if so required, in the normal course of business. Furthermore, the Parties shall jointly review such trunk performance and forecasts on a periodic basis. The Parties use of two-way interconnection trunk groups for the transport of local and/or intraLATA toll traffic between the Parties does not preclude either Party from establishing additional one-way interconnection trunks for the delivery of its originated local and/or intraLATA toll traffic to the other Party.

2.10.2 **BellSouth Access Tandem Interconnection Architectures**

BellSouth Access Tandem Interconnection provides intratandem access to subtending end offices. BellSouth Multiple Tandem Access (MTA), described later in this Agreement, may be ordered using any of the following access tandem architectures.

2.10.2.1 **Basic Architecture**

2.10.2.1.1 In this architecture, API's originating Local and IntraLATA Toll and originating and terminating Transit Traffic is transported on a single two-way trunk group between API and BellSouth access tandem(s) within a LATA. This group carries intratandem Transit Traffic between API and Independent Companies, Interexchange Carriers, other CLECs and other network providers with which API desires interconnection and has the proper contractual arrangements. This group also carries API originated intertandem traffic transiting a single BellSouth access tandem destined to third party tandems such as an Independent Company tandem or other CLEC tandem. BellSouth originated Local and IntraLATA Toll traffic is transported on a single one-way trunk group terminating to API. Other trunk groups for operator services, directory assistance, emergency services and intercept may be established if required. The LERG should be referenced for current routing and tandem serving arrangements. The Basic Architecture is illustrated in Exhibit B.

2.10.2.2 **One-Way Trunk Group Architecture**

2.10.2.2.1 In this architecture, the Parties interconnect using two one-way trunk groups. One one-way trunk group carries API-originated local and intraLATA toll traffic destined for BellSouth end-users. The other one-way trunk group carries BellSouth-originated local and intraLATA toll traffic destined for API end-users. A third two-way trunk group is established for API's originating and terminating Transit Traffic. This group carries intratandem Transit Traffic between API and Independent Companies, Interexchange Carriers, other CLECs and other network providers with which API desires interconnection and has the proper contractual arrangements. This group also carries API originated intertandem traffic transiting a single BellSouth access tandem destined to third party tandems such as an Independent Company tandem or other CLEC tandem. Other trunk groups for operator services, directory assistance, emergency services and intercept may be established if required. The LERG should be referenced for current routing and tandem serving arrangements. The One-Way Trunk Group Architecture is illustrated in Exhibit C.

2.10.2.3 **Two-Way Trunk Group Architecture**

2.10.2.3.1 The Two-Way Trunk Group Architecture establishes one two-way trunk group to carry local and intraLATA toll traffic between API and BellSouth. In addition, a two-way transit trunk group must be established for API's originating and terminating Transit Traffic. This group carries intratandem Transit Traffic

between API and Independent Companies, Interexchange Carriers, other CLECs and other network providers with which API desires interconnection and has the proper contractual arrangements. This group also carries API originated intertandem traffic transiting a single BellSouth access tandem destined to third party tandems such as an Independent Company tandem or other CLEC tandem. Other trunk groups for operator services, directory assistance, emergency services and intercept may be established if required. The LERG should be referenced for current routing and tandem serving arrangements. The Two-Way Trunk Group Architecture is illustrated in Exhibit D.

2.10.2.4 **Supergroup Architecture**

2.10.2.4.1 In the Supergroup Architecture, the Parties' Local and IntraLATA Toll and API's Transit Traffic are exchanged on a single two-way trunk group between API and BellSouth. This group carries intratandem Transit Traffic between API and Independent Companies, Interexchange Carriers, other CLECs and other network providers with which API desires interconnection and has the proper contractual arrangements. This group also carries API originated intertandem traffic transiting a single BellSouth access tandem destined to third party tandems such as an Independent Company tandem or other CLEC tandem. Other trunk groups for operator services, directory assistance, emergency services and intercept may be established if required. The LERG should be referenced for current routing and tandem serving arrangements. The Supergroup Architecture is illustrated in Exhibit E.

2.10.3 **Multiple Access Tandem Service**

2.10.3.1 BellSouth **Multiple Tandem Access (MTA)** provides for LATA wide BellSouth transport and termination of API-originated intraLATA toll and Local Traffic, that is transported by BellSouth, by establishing an interconnection trunk group(s) at a BellSouth access tandem with routing through multiple BellSouth access tandems as required. However, API must still establish an interconnection trunk group(s) at all BellSouth access tandems where API NXXs are "homed". If API does not have NXXs homed at a BellSouth access tandem within a LATA and elects not to establish an interconnection trunk group(s) at such BellSouth access tandem, API can order MTA in each BellSouth access tandem within the LATA where it does have an interconnection trunk group(s) and BellSouth will terminate traffic to end-users served through those BellSouth access tandems where API does not have an interconnection trunk group(s). MTA shall be provisioned in accordance with BellSouth's Ordering Guidelines.

2.10.3.2 MTA does not include switched access traffic that transits the BellSouth network to an Interexchange Carrier (IXC). Switched Access traffic will be delivered to and by IXCs based on API's NXX Access Tandem homing arrangement as specified by API in the LERG.

2.10.3.3 For API-originated local and intraLATA toll traffic that BellSouth transports but is destined for termination by a third Party network (Transit Traffic), BellSouth MTA is required if multiple BellSouth access tandems are necessary to deliver the call to the third Party network.

2.10.3.4 The Parties agree that compensation for the BellSouth transport and/or termination of API's Local Traffic and intraLATA toll traffic will be billed on a statewide basis at the applicable rates specified in Exhibit A to this Attachment for Local Traffic and at the BellSouth intrastate switched access tariff rates for intraLATA toll traffic.

2.10.3.5 To the extent API does not purchase MTA in a calling area that has multiple access tandems serving the calling area as defined by BellSouth, API must establish an interconnection trunk group(s) to every access tandem in the calling area in order to serve the entire calling area. To the extent API does not purchase MTA and provides intraLATA toll service to its customers, it may be necessary for it to establish an interconnection trunk group(s) to additional BellSouth access tandems that serve end offices outside the local calling area. To the extent API routes its traffic in such a way that utilizes BellSouth's MTA service without properly ordering MTA service, API agrees to pay BellSouth the associated transport and termination charges.

2.10.4 **Local Tandem Interconnection**

2.10.4.1 Local Tandem Interconnection arrangement allows API to establish an interconnection trunk group(s) at BellSouth local tandems for: (1) the delivery of API-originated Local Traffic transported and terminated by BellSouth to BellSouth end offices within the local calling area as defined in BellSouth's General Subscriber Services Tariff (GSST), section A3 served by those BellSouth local tandems, and (2) for local Transit Traffic transported by BellSouth for third party network providers who have also established an interconnection trunk group(s) at those BellSouth local tandems.

2.10.4.2 When a specified local calling area is served by more than one BellSouth local tandem, API must designate a "home" local tandem for each of its assigned NPA/NXXs and establish trunk connections to such local tandems. Additionally, API may choose to establish an interconnection trunk group(s) at the BellSouth local tandems where it has no codes homing but is not required to do so. API may deliver Local Traffic to a "home" BellSouth local tandem that is destined for other BellSouth or third party network provider end offices subtending other BellSouth local tandems in the same local calling area where API does not choose to establish an interconnection trunk group(s). It is API's responsibility to enter its own NPA/NXX local tandem homing arrangements into the LERG either directly or via a vendor in order for other third party network providers to determine appropriate traffic routing to API's codes. Likewise, API shall obtain its routing information from the LERG.

2.10.4.3 Notwithstanding establishing an interconnection trunk group(s) to BellSouth's local tandems, API must also establish an interconnection trunk group(s) to BellSouth access tandems within the LATA on which API has NPA/NXXs homed for the delivery of Interexchange Carrier Switched Access (SWA) and toll traffic, and traffic to Type 2A CMRS connections located at the access tandems. BellSouth shall not switch SWA traffic through more than one BellSouth access tandem. SWA, Type 2A CMRS or toll traffic routed to the local tandem in error will not be backhauled to the BellSouth access tandem for completion. (Type 2A CMRS interconnection is defined in BellSouth's A35 General Subscriber Services Tariff).

2.10.4.4 BellSouth's provisioning of local tandem interconnection assumes that API has executed the necessary local interconnection agreements with the other third party network providers subtending those local tandems as required by the Act.

2.10.5 **Direct End Office-to-End Office Interconnection**

2.10.5.1 Direct End Office-to-End Office one-way or two-way interconnection trunk groups allow for the delivery of a Party's originating local or intraLATA toll traffic to the terminating Party on a direct end office-to-end office basis.

2.10.5.2 The Parties shall utilize direct end office-to-end office trunk groups under the following conditions:

2.10.5.2.1 Tandem Exhaust - If a tandem through which the Parties are interconnected is unable to, or is forecasted to be unable to support additional traffic loads for any period of time, the Parties will mutually agree on an end office trunking plan that will alleviate the tandem capacity shortage and ensure completion of traffic between API and BellSouth's subscribers.

2.10.5.2.2 Traffic Volume –To the extent either Party has the capability to measure the amount of traffic between a API switching center and a BellSouth end office, either Party shall install and retain direct end office trunking sufficient to handle actual or reasonably forecasted traffic volumes, whichever is greater, between a API switching center and a BellSouth end office where the traffic exceeds or is forecasted to exceed a single DS1 of traffic per month. Either Party will install additional capacity between such points when overflow traffic between API's switching center and BellSouth's end office exceeds or is forecasted to exceed a single DS1 of traffic per month. In the case of one way trunking, additional trunking shall only be required by the Party whose trunking has achieved the preceding usage threshold.

2.10.5.2.3 Mutual Agreement - The Parties may install direct end office trunking upon mutual agreement in the absence of conditions (1) or (2) above, and agreement will not unreasonably be withheld.

2.10.6 **Transit Traffic Trunk Group**

2.10.6.1 Transit Traffic trunks can either be two-way trunks or two one-way trunks ordered by API to deliver and receive local and intraLATA toll Transit Traffic from third parties, such as Independent Companies and other CLECs, via BellSouth access tandems (or BellSouth local tandems for Local Traffic), and Switched Access traffic to and from Interexchange Carriers via BellSouth access tandems pursuant to the Transit Traffic section of this Attachment. Establishing Transit Traffic trunks at BellSouth access and local tandems provides intratandem access to the third parties also interconnected at those tandems.

2.10.6.2 **Toll Free Traffic**

2.10.6.2.1 If API chooses BellSouth to handle Toll Free database queries from its switches, all API originating Toll Free traffic will be routed over the Transit Traffic Trunk Group.

2.10.6.2.2 All originating Toll Free Service (Toll Free) calls for which API requests that BellSouth perform the Service Switching Point ("SSP") function (i.e., perform the database query) shall be delivered using GR-394 format over the Transit Traffic Trunk Group. Carrier Code "0110" and Circuit Code (to be determined for each LATA) shall be used for all such calls.

2.10.6.2.3 API may handle its own Toll Free database queries from its switch. If so, API will determine the nature (local/intraLATA/interLATA) of the Toll Free call based on the response from the database. If the query determines that the call is a BellSouth local or intraLATA Toll Free number, API will route the post-query local or IntraLATA converted ten-digit local number to BellSouth over the local or intraLATA trunk group. If the query determines that the call is a third party (ICO or other CLEC) local or intraLATA Toll Free number, API will route the post-query local or intraLATA converted ten-digit local number to BellSouth over the Transit Traffic Trunk Group. In such case, API is to provide a Toll Free billing record when appropriate. If the query reveals the call is an interLATA Toll Free number, API will route the post-query interLATA call (Toll Free number) directly from its switch for carriers interconnected with its network or over the Transit Traffic Trunk Group to carriers not directly connected to its network but are connected to BellSouth's access tandem. Calls will be routed to BellSouth over the local/intraLATA and Transit Traffic Trunk Groups within the LATA in which the calls originate.

2.10.6.2.4 All post-query Toll Free Service (Toll Free) calls for which API performs the SSP function, if delivered to BellSouth, shall be delivered using GR-394 format for calls destined to IXCs, and GR-317 format for calls destined to end offices that directly subtend the BellSouth access tandem.

3. Network Design And Management For Interconnection

3.1 Network Management and Changes. Both Parties will work cooperatively with each other to install and maintain the most effective and reliable interconnected telecommunications networks, including but not limited to, the exchange of toll-free maintenance contact numbers and escalation procedures. Both Parties agree to provide public notice of changes in the information necessary for the transmission and routing of services using its local exchange facilities or networks, as well as of any other changes that would affect the interoperability of those facilities and networks.

3.2 Interconnection Technical Standards. The interconnection of all networks will be based upon accepted industry/national guidelines for transmission standards and traffic blocking criteria. Interconnecting facilities shall conform, at a minimum, to the telecommunications industry standard of DS-1 pursuant to Bellcore Standard No. TR-NWT-00499. Signal transfer point, Signaling System 7 ("SS7") connectivity is required at each interconnection point. BellSouth will provide out-of-band signaling using Common Channel Signaling Access Capability where technically and economically feasible, in accordance with the technical specifications set forth in the BellSouth Guidelines to Technical Publication, TR-TSV-000905. Facilities of each Party shall provide the necessary on-hook, off-hook answer and disconnect supervision and shall hand off calling number ID (Calling Party Number) when technically feasible.

3.3 Quality of Interconnection. The local interconnection for the transmission and routing of telephone exchange service and exchange access that each Party provides to each other will be at least equal in quality to what it provides to itself and any subsidiary or affiliate, where technically feasible, or to any other Party to which each Party provides local interconnection.

3.4 Network Management Controls. Both Parties will work cooperatively with each other to apply sound network management principles by invoking appropriate network management controls (e.g., call gapping) to alleviate or prevent network congestion.

3.5 Common Channel Signaling. Both Parties will provide LEC-to-LEC Common Channel Signaling ("CCS") to each other, where available, in conjunction with all traffic in order to enable full interoperability of CLASS features and functions except for call return. All CCS signaling parameters will be provided, including automatic number identification ("ANI"), originating line information ("OLI") calling company category, charge number, etc. All privacy indicators will be honored, and each Party will cooperate with each other on the exchange of Transactional Capabilities Application Part ("TCAP") messages to facilitate full interoperability of CCS-based features between the respective networks. Neither Party shall alter the CCS parameters, or be a party to altering such parameters, or knowingly pass CCS parameters that have been altered in order to circumvent appropriate interconnection charges.

3.6 Signaling Call Information. BellSouth and API will send and receive 10 digits for Local Traffic. Additionally, BellSouth and API will exchange the proper call information, i.e. originated call company number and destination call company number, CIC, and OZZ, including all proper translations for routing between networks and any information necessary for billing.

3.7 **Forecasting for Trunk Provisioning**

3.7.1 Within six (6) months after execution of this agreement, API shall provide an initial interconnection trunk group forecast for each LATA that it shall provide service within BellSouth's region. Upon receipt of API's forecast, the Parties shall schedule and participate in a joint planning meeting to develop a joint interconnection trunk group forecast. Each forecast provided under this Section shall be deemed "Confidential Information" under the General Terms and Conditions of this Agreement.

3.7.1.1 At a minimum, the forecast shall include the projected quantity of Transit Trunks, API-to-BellSouth one-way trunks ("API Trunks"), BellSouth-to-API one-way trunks ("Reciprocal Trunks") and/or two-way interconnection trunks, if the Parties have agreed to interconnect using two-way trunking to transport the Parties' local and intraLATA toll. The quantities shall be projected for a minimum of six months in advance and shall include the current year plus next two years total forecasted quantities. Considering API's provided forecast, the Parties shall mutually develop Reciprocal Trunk and/or two-way interconnection trunk forecast quantities for the time periods listed and to be included within the initial forecast.

3.7.1.2 Additionally all forecasts shall include, at a minimum, Access Carrier Terminal Location ("ACTL"), trunk group type (local/intraLATA toll, Transit, Operator Services, 911, etc.), A location/Z location (CLLI codes for API location and BellSouth location where the trunks shall terminate), interface type (e.g., DS1), Direction of Signaling, Trunk Group Number, if known, (commonly referred to as the 2-6 code) and forecasted trunks in service each year (cumulative).

3.7.2 Each Party shall exercise its best efforts to provide the quantity of interconnection trunks mutually forecasted. However, the provision of the forecasted quantity of interconnection trunks is subject to trunk terminations and facility capacity existing at the time the trunk order is submitted. Furthermore, the receipt and development of trunk forecasts does not imply any liability for failure to perform if capacity (trunk terminations or facilities) is not available for use at the forecasted time.

3.7.3 The submitting and development of interconnection trunk forecasts shall not replace the ordering process in place for local interconnection trunks.

3.7.4 Once initial interconnection trunk forecasts have been developed, API shall continue to provide interconnection trunk forecasts on a semiannual basis or at

otherwise mutually agreeable intervals. API shall use its best efforts to make the forecasts as accurate as possible based on reasonable engineering criteria. Interconnection trunk forecasts shall be updated and provided to BellSouth on an as needed basis, but no less frequently than semiannually and no more frequently than monthly. Upon receipt of API's forecast, including forecast updates, the Parties shall confer to mutually develop BellSouth Reciprocal Trunk and/or two-way interconnection trunk forecasted quantities for the listed time periods within such subsequent forecasts.

3.8 **Trunk Utilization**

3.8.1 BellSouth and API shall monitor traffic on each interconnection trunk group that is installed pursuant to the initial interconnection trunk requirements and subsequent forecasts. At any time after the end of a calendar quarter, based on a review of the capacity utilization during such quarter for installed Reciprocal Trunk groups and/or two-way interconnection trunk groups, subject to the provision of the section following, after fifteen (15) business days advance written notice to API, BellSouth may disconnect any Non-utilized Reciprocal Trunk(s) and API shall refund to BellSouth any associated trunk and facility charges paid by BellSouth. In addition, BellSouth may request API to disconnect any Non-utilized two-way interconnection trunk(s), if BellSouth has determined that the trunk group is not being utilized at eighty-five percent (85%) of the time consistent busy hour utilization level, provided that the Parties have not otherwise agreed. API shall comply with such request, subject to Section 3.8.1.1 below. Non-utilized trunks are defined as the trunks not being utilized as a result of a time consistent busy hour utilization of less than 85%.

3.8.1.1 Within ten (10) business days following the notice prescribed in the section above, API may request that BellSouth not disconnect or not request disconnection for some or all of the Non-utilized Trunks, in which event BellSouth shall keep the trunks in service and may invoice API for, and API shall pay, all applicable recurring and nonrecurring trunk and facility access tariff charges for the Non-utilized Trunks. The charges shall be applied retroactive to the date on which such trunks were installed and to continue until such trunks are disconnected, or to the extent API requests that such trunks remain in service, until the trunk group reaches an eighty-five percent (85%) time-consistent busy hour utilization level. In addition, API shall reimburse BellSouth for any nonrecurring and/or recurring charges BellSouth may have paid to API for the Non-utilized Trunks and for any trunk installation expense BellSouth incurred. This expense shall equal the nonrecurring installation charge for trunks in BellSouth's intrastate tariff. Furthermore, the API forecasts for each subsequent forecast period shall be automatically reduced by the number of Reciprocal Trunks and/or two-way interconnection trunks that have been determined to be subject to disconnection pursuant to the foregoing procedures.

3.8.2 To the extent API requests BellSouth and BellSouth agrees to install additional Reciprocal and/or two-way interconnection trunks in any forecast period following the initial forecasting period that are not included in the forecast for that period (as such forecast may be revised from time to time), such trunks may be provisioned by BellSouth subject to the conditions set forth in the preceding sections above, and all applicable recurring and nonrecurring charges for such trunks shall be billed to and paid by API until such trunk groups reach an eighty-five percent (85%) time-consistent busy hour utilization level.

3.8.3 To the extent that any interconnection trunk group is utilized at a time-consistent busy hour of ninety percent (90%) or greater, the Parties shall negotiate in good faith for the installation of augmented facilities.

4. Local Dialing Parity

4.1 BellSouth and API shall provide local and toll dialing parity to each other with no unreasonable dialing delays. Dialing parity shall be provided for all originating telecommunications services that require dialing to route a call. BellSouth and API shall permit similarly situated telephone exchange service end users to dial the same number of digits to make a local telephone call notwithstanding the identity of the end user's or the called party's telecommunications service provider.

5. Interconnection Compensation

5.1 Compensation for Call Transportation and Termination for Local Traffic

5.1.1 For reciprocal compensation between the Parties pursuant to this Attachment, Local Traffic is defined as any circuit switched call that is originated by an end user of one Party and terminated to an end user of the other Party within a given LATA on that other Party's network, except for those calls that are originated or terminated through switched access arrangements as established by the ruling regulatory body.

5.1.1.1 Additionally, Local Traffic includes any cross boundary, voice-to-voice intrastate, interLATA or interstate, interLATA calls between specific wire centers established as a local call by the ruling regulatory body.

5.1.1.2 As clarification of this definition and for reciprocal transport and termination compensation, Local Traffic does not include traffic that originates from or is

directed to or through an enhanced service provider or information service provider.

5.1.1.3 As further clarification, Local Traffic does not include calls that do not transmit information of the user's choosing. In any event, neither Party shall pay reciprocal compensation to the other if the "traffic" to which such reciprocal compensation would otherwise apply was generated, in whole or in part, for the purpose of creating an obligation on the part of the originating carrier to pay reciprocal compensation for such traffic.

5.1.2 The Parties shall provide for the mutual and reciprocal recovery of the costs for the elemental functions performed in transporting and terminating Local Traffic on each other's network. The Parties agree that charges for transport and termination of calls on its respective networks are as set forth in Exhibit A to this Attachment.

5.1.3 For the purposes of this Attachment, **Common (Shared) Transport** is defined as the transport of the originating Party's traffic by the terminating Party over the terminating Party's common (shared) facilities between the terminating Party's tandem switch and end office switch and/or between the terminating Party's tandem switches.

5.1.4 For the purposes of this Attachment, **Tandem Switching** is defined as the function that establishes a communications path between two switching offices through a third switching office (the Tandem switch).

5.1.5 For the purposes of this Attachment, **End Office Switching** is defined as the function that establishes a communications path between the trunk side and line side of the End Office switch.

5.1.6 If API utilizes a switch outside the LATA and BellSouth chooses to purchase dedicated or common (shared) transport from API for transport and termination of BellSouth originated traffic, BellSouth will pay API no more than the airline miles between the V & H coordinates of the Interconnection Point within the LATA where API receives the BellSouth-originated traffic and the V & H coordinates of the BellSouth Exchange Rate Center Area that the API terminating NPA/NXX is associated in the same LATA. For these situations, BellSouth will compensate API at either dedicated or common (shared) transport rates specified in Exhibit A and based upon the functions provided by API as defined in this Attachment.

5.1.7 Neither Party shall represent Switched Access Traffic as Local Traffic for purposes of payment of reciprocal compensation.

5.1.8 Pursuant to the definition of Local Traffic in this Attachment, and for the purpose of delivery of BellSouth originating traffic to API, BellSouth shall pay to API reciprocal compensation for Local Traffic delivered to API end users physically

located within the LATA in which the call originated and within which the API end user's NPA/NXX is assigned. If API assigns NPA/NXXs to specific BellSouth rate centers within the LATA and assigns numbers from those NPA/NXXs to API end users physically located outside of that LATA, BellSouth traffic originating from within the LATA where the NPA/NXXs are assigned and delivered to a API customer physically located outside of such LATA, shall not be deemed Local Traffic, and no compensation from BellSouth to API shall be due therefor. Further, API agrees to identify such interLATA traffic to BellSouth and to compensate BellSouth for originating and transporting such interLATA traffic to API at BellSouth's switched access tariff rates.

5.1.9 If API does not identify such interLATA traffic to BellSouth, to the best of BellSouth's ability BellSouth will determine which whole API NPA/NXXs on which to charge the applicable rates for originating network access service as reflected in BellSouth's Access Service Tariff. BellSouth shall make appropriate billing adjustments if API can provide sufficient information for BellSouth to determine whether or not said traffic is Local Traffic.

5.2 **Percent Local Use**. Each Party shall report to the other a Percent Local Usage ("PLU"). The application of the PLU will determine the amount of local minutes to be billed to the other Party. For purposes of developing the PLU, each Party shall consider every local call and every long distance call, excluding Transit Traffic. Each Party shall update its PLU on the first of January, April, July and October of the year and shall send it to the other Party to be received no later than 30 calendar days after the first of each such month based on local usage for the past three months ending the last day of December, March, June and September, respectively. Requirements associated with PLU calculation and reporting shall be as set forth in BellSouth's Percent Local Use Reporting Guidebook, as it is amended from time to time. Notwithstanding the foregoing, where the terminating Party has message recording technology that identifies the jurisdiction of traffic terminated as defined in this Agreement, such information, in lieu of the PLU factor, shall at the terminating Party's option be utilized to determine the appropriate local usage compensation to be paid.

5.3 **Percent Local Facility**. Each Party shall report to the other a Percent Local Facility ("PLF"). The application of the PLF will determine the portion of switched dedicated transport to be billed per the local jurisdiction rates. The PLF shall be applied to multiplexing, local channel and interoffice channel switched dedicated transport utilized in the provision of local interconnection trunks. Each Party shall update its PLF on the first of January, April, July and October of the year and shall send it to the other Party to be received no later than 30 calendar days after the first of each such month to be effective the first bill period the following month, respectively. Requirements associated with PLU and PLF calculation and reporting shall be as set forth in BellSouth's Percent Local Facility Reporting Guidebook, as it is amended from time to time.

5.4 **Percent Interstate Usage.** Each Party shall report to the other the projected Percent Interstate Usage ("PIU"). All jurisdictional report requirements, rules and regulations for Interexchange Carriers specified in BellSouth's Intrastate Access Services Tariff will apply to API. After interstate and intrastate traffic percentages have been determined by use of PIU procedures, the PLU and PLF factors will be used for application and billing of local interconnection. Each Party shall update its PIUs on the first of January, April, July and October of the year and shall send it to the other Party to be received no later than 30 calendar days after the first of each such month, for all services showing the percentages of use (PIUs, PLU, and PLF) for the past three months ending the last day of December, March, June and September. Notwithstanding the foregoing, where the terminating Party has message recording technology that identifies the jurisdiction of traffic terminated as defined in this Agreement, such information, in lieu of the PIU and PLU factors, shall at the terminating Party's option be utilized to determine the appropriate local usage compensation to be paid.

5.5 **Audits.** On thirty (30) days written notice, each Party must provide the other the ability and opportunity to conduct an annual audit to ensure the proper billing of traffic. BellSouth and API shall retain records of call detail for a minimum of nine months from which a PLU, PLF and/or PIU can be ascertained. The audit shall be accomplished during normal business hours at an office designated by the Party being audited. Audit requests shall not be submitted more frequently than one (1) time per calendar year. Audits shall be performed by a mutually acceptable independent auditory paid for by the Party requesting the audit. The PLU and/or PIU shall be adjusted based upon the audit results and shall apply to the usage for the quarter the audit was completed, to the usage for the quarter prior to the completion of the audit, and to the usage for the two quarters following the completion of the audit. If, as a result of an audit, either Party is found to have overstated the PLU and/or PIU by twenty percentage points (20%) or more, that Party shall reimburse the auditing Party for the cost of the audit.

5.6 **Rate True-up**

This section applies only to Tennessee and other rates that are interim or expressly subject to true-up under this attachment.

5.6.1 The interim prices for Unbundled Network Elements and Other Services and Local Interconnection shall be subject to true-up according to the following procedures:

5.6.2 The interim prices shall be trued-up, either up or down, based on final prices determined either by further agreement between the Parties, or by a final order (including any appeals) of the Commission which final order meets the criteria of (3) below. The Parties shall implement the true-up by comparing the actual

volumes and demand for each item, together with interim prices for each item, with the final prices determined for each item. Each Party shall keep its own records upon which the true-up can be based, and any final payment from one Party to the other shall be in an amount agreed upon by the Parties based on such records. In the event of any disagreement as between the records or the Parties regarding the amount of such true-up, the Parties agree that the body having jurisdiction over the matter shall be called upon to resolve such differences, or the Parties may mutually agree to submit the matter to the Dispute Resolution process in accordance with the provisions of Section 12 of the General Terms and Conditions and Attachment 1 of the Agreement.

5.6.3 The Parties may continue to negotiate toward final prices, but in the event that no such agreement is reached within nine (9) months, either Party may petition the Commission to resolve such disputes and to determine final prices for each item. Alternatively, upon mutual agreement, the Parties may submit the matter to the Dispute Resolution Process set forth in the General Terms and Conditions of the Agreement, so long as they file the resulting Agreement with the Commission as a "negotiated agreement" under Section 252(e) of the Act.

5.6.4 An effective order of the Commission that forms the basis of a true-up shall be based upon cost studies submitted by either or both Parties to the Commission and shall be binding upon BellSouth and API specifically or upon all carriers generally, such as a generic cost proceeding.

5.7 **Compensation for IntraLATA Toll Traffic**

5.7.1 IntraLATA Toll Traffic. IntraLATA Toll Traffic is defined as any telephone call that is not local or switched access per this Agreement.

5.7.2 Compensation for intraLATA toll traffic. For terminating its intraLATA toll traffic on the other company's network, the originating Party will pay the terminating Party BellSouth's current intrastate or interstate, whichever is appropriate, terminating switched access tariff rates as set forth in BellSouth's Intrastate or Interstate Access Services Tariff. The appropriate charges will be determined by the routing of the call. If API is the BellSouth end user's presubscribed interexchange carrier or if the BellSouth end user uses API as an interexchange carrier on a 101XXXX basis, BellSouth will charge API the appropriate BellSouth tariff charges for originating switched access services.

5.7.3 Compensation for 8XX Traffic. Each Party shall compensate the other pursuant to the appropriate switched access charges, including the database query charge as set forth in the BellSouth intrastate or interstate switched access tariffs.

5.7.4 Records for 8XX Billing. Each Party will provide to the other the appropriate records necessary for billing intraLATA 8XX customers. The records provided will be in a standard EMI format.

5.7.5 8XX Access Screening. BellSouth's provision of 8XX TFD to API requires interconnection from API to BellSouth 8XX SCP. Such interconnections shall be established pursuant to BellSouth's Common Channel Signaling Interconnection Guidelines and Bellcore's CCS Network Interface Specification document, TR-TSV-000905. API shall establish CCS7 interconnection at the BellSouth Local Signal Transfer Points serving the BellSouth 8XX SCPs that API desires to query. The terms and conditions for 8XX TFD are set out in BellSouth's Intrastate Access Services Tariff as amended.

5.8 **Mutual Provision of Switched Access Service**

5.8.1 Switched Access Traffic. Switched Access Traffic is described in the BellSouth Access Tariff. Additionally, any Public Switched Telephone Network interexchange telecommunications traffic, regardless of transport protocol method, where the originating and terminating points, end-to-end points, are in different LATAs, or are in the same LATA and the Parties' Switched Access services are used for the origination or termination of the call, shall be considered Switched Access Traffic. Irrespective of transport protocol method used, a call which originates in one LATA and terminates in another LATA (i.e., the end-to-end points of the call), shall not be compensated as local.

5.8.2 When API's end office switch, subtending the BellSouth Access Tandem switch for receipt or delivery of switched access traffic, provides an access service connection to or from an interexchange carrier ("IXC") by either a direct trunk group to the IXC utilizing BellSouth facilities, or via BellSouth's tandem switch, each Party will provide its own access services to the IXC and bill on a multi-bill, multi-tariff meet-point basis. Each Party will bill its own access services rates to the IXC with the exception of the interconnection charge. The interconnection charge will be billed by the Party providing the end office function. Each party will use the Multiple Exchange Carrier Access Billing (MECAB) guidelines to establish meet point billing for all applicable traffic. Thirty (30)-day billing periods will be employed for these arrangements. For tandem routed traffic, the tandem company agrees to provide to the Initial Billing Company as defined in MECAB, at no charge, all the switched access detail usage data, recorded at the access tandem, within no more than sixty (60) days after the recording date. The Initial Billing Company will provide the switched access summary usage data, for all originating and terminating traffic, to all Subsequent Billing Companies as defined in MECAB within 10 days of rendering the initial bill to the IXC. Each Party will notify the other when it is not feasible to meet these requirements so that the customers may be notified for any necessary revenue accrual associated with the significantly delayed recording or billing. As business requirements change data reporting requirements may be modified as necessary.

5.8.3 In the event that either Party fails to provide the appropriate MECAB switched access usage data to the other Party within 90 days after the recording date and the receiving Party is unable to bill and/or collect access revenues due to the sending

Party's failure to provide such data within said time period, then the Party failing to send the data as specified herein shall be liable to the other Party in an amount equal to the unbillable or uncollectible revenues. Each company will provide complete documentation to the other to substantiate any claim of unbillable switched access revenues, and a negotiated settlement will be agreed upon between the Parties.

5.8.4 Each Party will retain for a minimum period of sixty (60) days, access message detail sufficient to recreate any data which is lost or damaged by their company or any third party involved in processing or transporting data.

5.8.5 Each Party agrees to recreate the lost or damaged data within forty-eight (48) hours of notification by the other or by an authorized third party handling the data.

5.8.6 Each Party also agrees to process the recreated data within forty-eight (48) hours of receipt at its data processing center.

5.8.7 All claims should be filed with the other Party within 120 days of the receipt of the date of the unbillable usage.

5.8.8 The Initial Billing Company shall keep records of its billing activities relating to jointly-provided Intrastate and Interstate access services in sufficient detail to permit the Subsequent Billing Party to, by formal or informal review or audit, to verify the accuracy and reasonableness of the jointly-provided access billing data provided by the Initial Billing Party. Each Party agrees to cooperate in such formal or informal reviews or audits and further agrees to jointly review the findings of such reviews or audits in order to resolve any differences concerning the findings thereof.

5.8.9 API agrees not to deliver switched access traffic to BellSouth for termination except over API ordered switched access trunks and facilities.

5.9 **Transit Traffic Service**

5.9.1 BellSouth shall provide tandem switching and transport services for API's Transit Traffic. Transit traffic is traffic originating on API's network that is switched and/or transported by BellSouth and delivered to a third party's network, or traffic originating on a third Party's network that is switched and/or transported by BellSouth and delivered to API's network. Rates for local Transit Traffic shall be the applicable Call Transport and Termination charges as set forth in Exhibit A to this Attachment. Rates for intraLATA toll and Switched Access Transit Traffic shall be the applicable charges as set forth in BellSouth Interstate or Intrastate Switched Access tariffs. Switched Access Transit Traffic presumes that API's end office is subtending the BellSouth Access Tandem for switched access traffic to and from API's end users utilizing BellSouth facilities, either by direct trunks with the IXC, or via the BellSouth Access Tandem. Billing associated with all

Transit Traffic shall be pursuant to MECAB guidelines. Pursuant to these guidelines, the Initial Billing Company shall provide summary usage data, for all originating and terminating Transit Traffic, to all Subsequent Billing Companies. Traffic between API and Wireless Type 1 third parties shall not be treated as Transit Traffic from a routing or billing perspective. Traffic between API and Wireless Type 2A or UNE-CLEC third parties shall not be treated as Transit Traffic from a routing or billing perspective until BellSouth and the Wireless carrier or UNE-CLEC third party have the capability to properly meet-point-bill in accordance with MECAB guidelines.

5.9.2 In the event that either Party fails to provide the appropriate MECAB usage data to the other Party within 90 days after the recording date and the receiving Party is unable to bill and/or collect Transit Traffic revenues due to the sending Party's failure to provide such data within said time period, then the Party failing to send the data as specified herein shall be liable to the other Party in an amount equal to the unbillable or uncollectible revenues. Each company will provide complete documentation to the other to substantiate any claim of unbillable revenues and a negotiated settlement will be agreed upon between the Parties

5.9.2 The delivery of traffic which transits the BellSouth network and is transported to another carrier's network is excluded from any BellSouth billing guarantees and will be delivered at the rates stipulated in this Agreement to a terminating carrier. BellSouth agrees to deliver this traffic to the terminating carrier; provided, however, that API is solely responsible for negotiating and executing any appropriate contractual agreements with the terminating carrier for the receipt of this traffic through the BellSouth network. BellSouth will not be liable for any compensation to the terminating carrier or to API. API agrees to compensate BellSouth for any charges or costs for the delivery of Transit Traffic to a connecting carrier on behalf of API. Additionally, the Parties agree that any billing to a third party or other telecommunications carrier under this section shall be pursuant to MECAB procedures.

5.10 **Interconnection with Enhanced Service Providers (ESPs)/Information Service Providers (ISPs).**

5.10.1 ESP/ISP traffic shall not be included in the interconnection compensation arrangements of this Agreement.

6. Frame Relay Service Interconnection

6.1 In addition to the Local Interconnection services set forth above, BellSouth will offer a network to network Interconnection arrangement between BellSouth's and API's frame relay switches as set forth below. The following provisions will apply only to Frame Relay Service and Exchange Access Frame Relay Service in those states in which API is certified and providing Frame Relay Service as a

Local Exchange Carrier and where traffic is being exchanged between API and BellSouth Frame Relay Switches in the same LATA.

6.2 The Parties agree to establish two-way Frame Relay facilities between their respective Frame Relay Switches to the mutually agreed upon Frame Relay Service point(s) of interconnection ("POI(s)") within the LATA. All POIs shall be within the same Frame Relay Network Serving Areas as defined in Section A40 of BellSouth's General Subscriber Service Tariff except as set forth in this Attachment.

6.3 Upon the request of either Party, such interconnection will be established where BellSouth and API have Frame Relay Switches in the same LATA. Where there are multiple Frame Relay switches in one central office, an interconnection with any one of the switches will be considered an interconnection with all of the switches at that central office for purposes of routing packet traffic.

6.4 The Parties agree to provision local and IntraLATA Frame Relay Service and Exchange Access Frame Relay Service (both intrastate and interstate) over Frame Relay interconnection facilities between the respective Frame Relay switches and the POIs.

6.5 The Parties agree to assess each other reciprocal charges for the facilities that each provides to the other according to the Percent Local Circuit Use Factor (PLCU), determined as follows:

6.5.1 If the data packets originate and terminate in locations in the same LATA, and consistent with the local definitions of the Agreement, the traffic is considered local. Frame Relay framed packet data is transported within Virtual Circuits (VC). For the purposes of this Agreement, if all the data packets transported within a VC remain within the LATA, then consistent with the local definitions in this Agreement, the traffic on that VC is local ("Local VC").

6.5.2 If the originating and terminating locations of the two way packet data traffic are not in the same LATA, the traffic on that VC is interLATA ("InterLATA VC").

6.5.3 The PLCU is determined by dividing the total number of Local VCs, by the total number of VCs on each Frame Relay facility. To facilitate implementation, API may determine its PLCU in aggregate, by dividing the total number of Local VCs in a given LATA by the total number VCs in that LATA. The Parties agree to renegotiate the method for determining PLCU, at BellSouth's request, and within 90 days, if BellSouth notifies API that it has found that this method does not adequately represent the PLCU.

6.5.4 If there are no VCs on a facility when it is billed, the PLCU will be zero.

6.5.5 BellSouth will provide the circuit between the Parties' respective Frame Relay Switches. The Parties will be compensated as follows: BellSouth will invoice,

and API will pay, the total non-recurring and recurring charges for the circuit based upon the rates set forth in BellSouth's Interstate Access Tariff, FCC No. 1. API will then invoice, and BellSouth will pay, an amount calculated by multiplying the BellSouth billed charges for the circuit by one-half of API's PLCU.

6.6 The Parties agree to compensate each other for Frame Relay network-to-network interface (NNI) ports based upon the NNI rates set forth in BellSouth's Interstate Access Tariff, FCC No. 1. Compensation for each pair of NNI ports will be calculated as follows: BellSouth will invoice, and API will pay, the total non-recurring and recurring charges for the NNI port. API will then invoice, and BellSouth will pay, an amount calculated by multiplying the BellSouth billed non-recurring and recurring charges for the NNI port by API's PLCU.

6.7 Each Party agrees that there will be no charges to the other Party for its own subscriber's Permanent Virtual Circuit (PVC) rate elements for the local PVC segment from its Frame Relay switch to its own subscriber's premises. PVC rate elements include the Data Link Connection Identifier (DLCI) and Committed Information Rate (CIR).

6.8 For the PVC segment between the API and BellSouth Frame Relay switches, compensation for the PVC charges is based upon the rates in BellSouth's Interstate Access Tariff, FCC No. 1.

6.9 Compensation for PVC rate elements will be calculated as follows:

6.9.1 If API orders a VC connection between a BellSouth subscriber's PVC segment and a PVC segment from the BellSouth Frame Relay switch to the API Frame Relay switch, BellSouth will invoice, and API will pay, the total non-recurring and recurring PVC charges for the PVC segment between the BellSouth and API Frame Relay switches. If the VC is a Local VC, API will then invoice and BellSouth will pay, the total nonrecurring and recurring PVC charges billed for that segment. If the VC is not local, no compensation will be paid to API for the PVC segment.

6.9.2 If BellSouth orders a Local VC connection between a API subscriber's PVC segment and a PVC segment from the API Frame Relay switch to the BellSouth Frame Relay switch, BellSouth will invoice, and API will pay, the total non-recurring and recurring PVC and CIR charges for the PVC segment between the BellSouth and API Frame Relay switches. If the VC is a Local VC, API will then invoice and BellSouth will pay the total non-recurring and recurring PVC and CIR charges billed for that segment. If the VC is not local, no compensation will be paid to API for the PVC segment.

6.9.3 The Parties agree to compensate each other for requests to change a PVC segment or PVC service order record, according to the Feature Change charge as set forth in the BellSouth access tariff BellSouth Tariff FCC No. 1.

6.9.4 If API requests a change, BellSouth will invoice and API will pay a Feature Change charge for each affected PVC segment.

6.9.4.1 If BellSouth requests a change to a Local VC, API will invoice and BellSouth will pay a Feature Change charge for each affected PVC segment.

6.9.5 The Parties agree to limit the sum of the CIR for the VCs on a DS1 NNI port to not more than three times the port speed, or not more than six times the port speed on a DS3 NNI port.

6.9.6 Except as expressly provided herein, this Agreement does not address or alter in any way either Party's provision of Exchange Access Frame Relay Service or interLATA Frame Relay Service. All charges by each Party to the other for carriage of Exchange Access Frame Relay Service or interLATA Frame Relay Service are included in the BellSouth access tariff BellSouth Tariff FCC No. 1.

6.10 API will identify and report quarterly to BellSouth the PLCU of the Frame Relay facilities it uses, per section 6.5.3 above.

6.11 Either Party may request a review or audit of the various service components, consistent with the provisions of section E2 of the BellSouth State Access Services tariffs or Section 2 of the BellSouth FCC No.1 Tariff.

6.12 If during the term of this Agreement, BellSouth obtains authority to provide interLATA Frame Relay in any State, the Parties agree to renegotiate this arrangement for the exchange of Frame Relay Service Traffic within one hundred eighty (180) days of the date BellSouth receives interLATA authority. In the event the Parties fail to renegotiate this Section 6 within the one hundred eighty day period, they will submit this matter to the appropriate State commission(s) for resolution.

7. Operational Support Systems (OSS)

The terms, conditions and rates for OSS are as set forth in Attachment 2.

Exhibit B

Basic Architecture

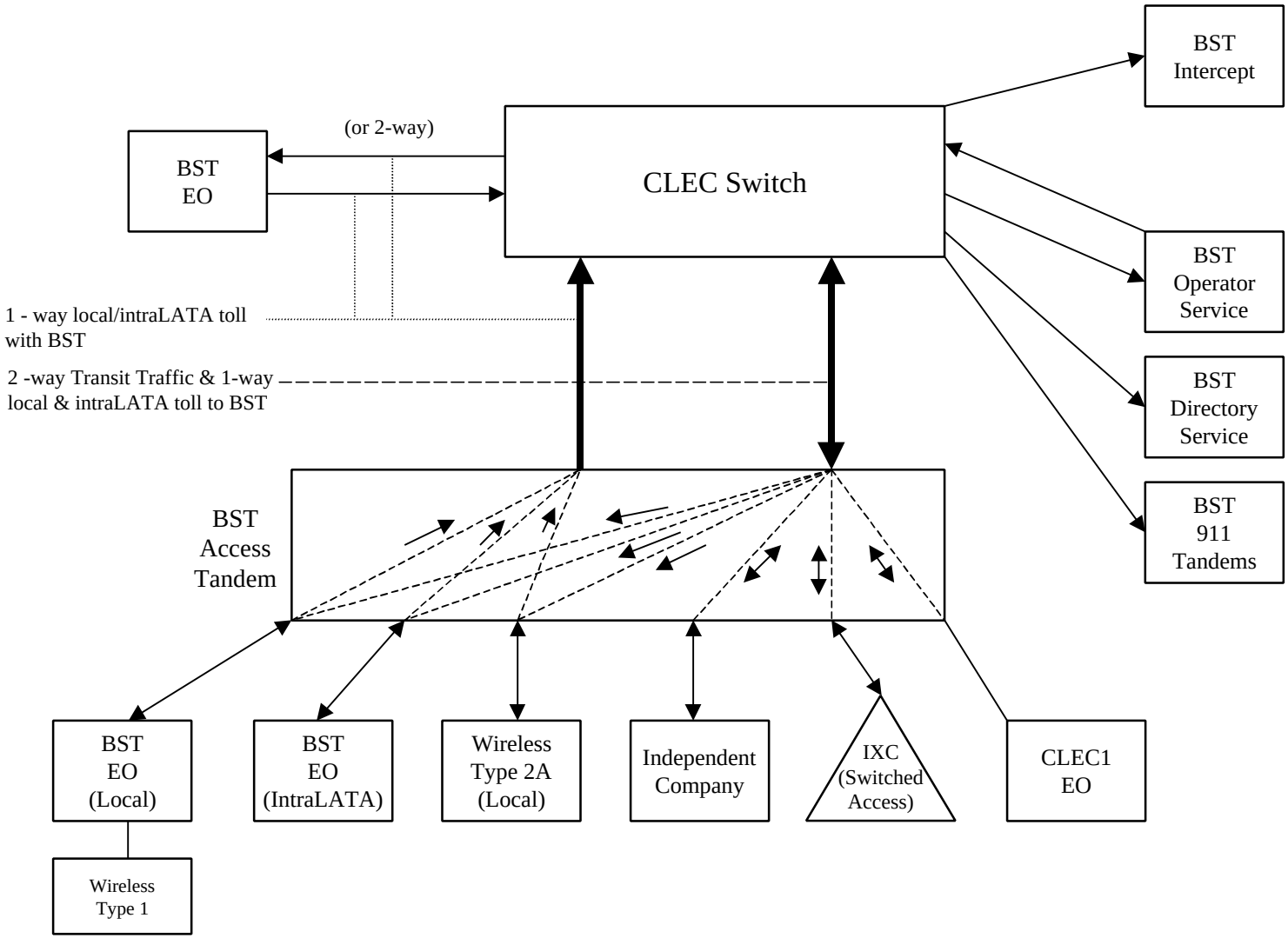

Exhibit C

One-Way Architecture

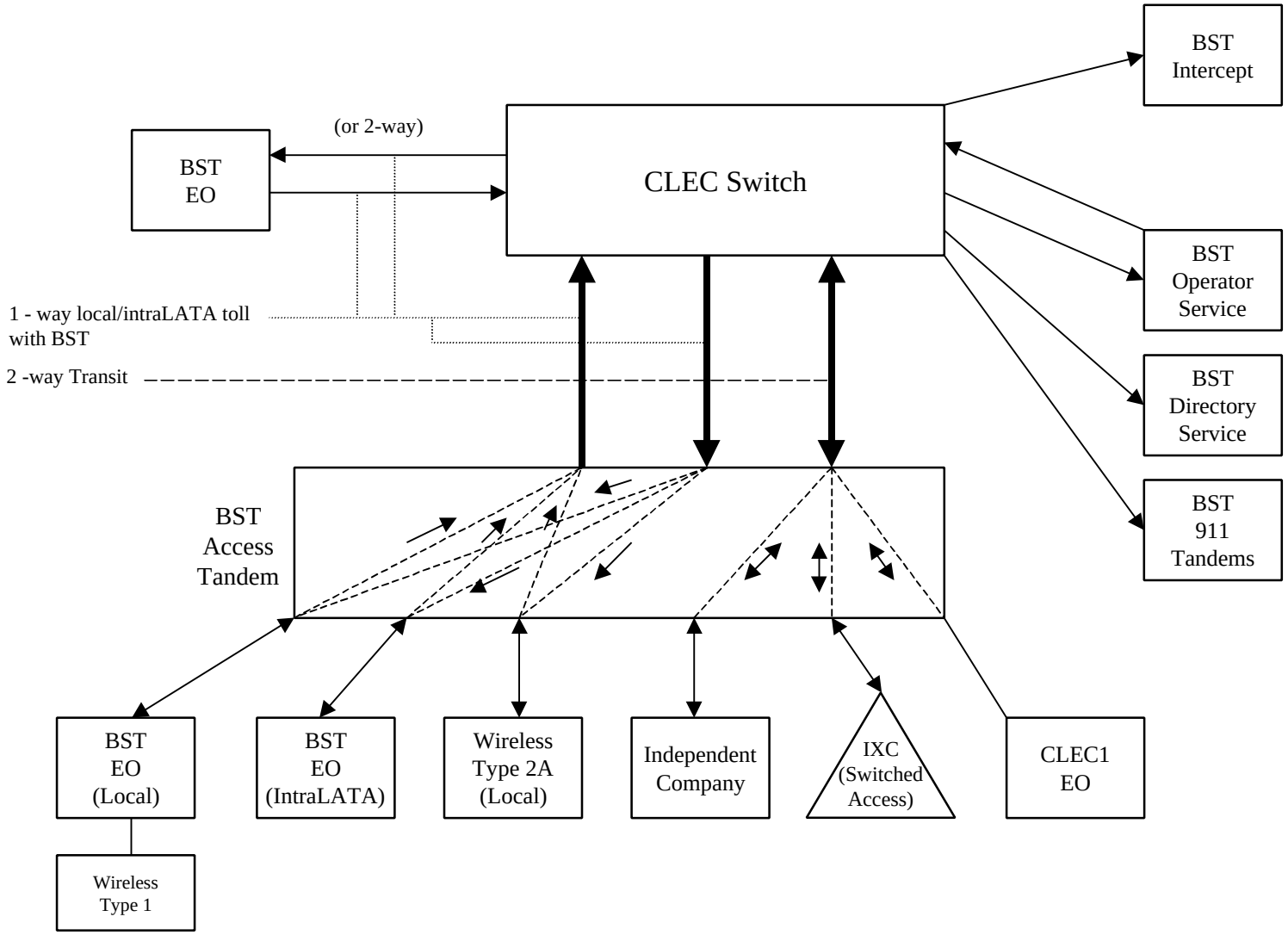

Exhibit D

Two-Way Architecture

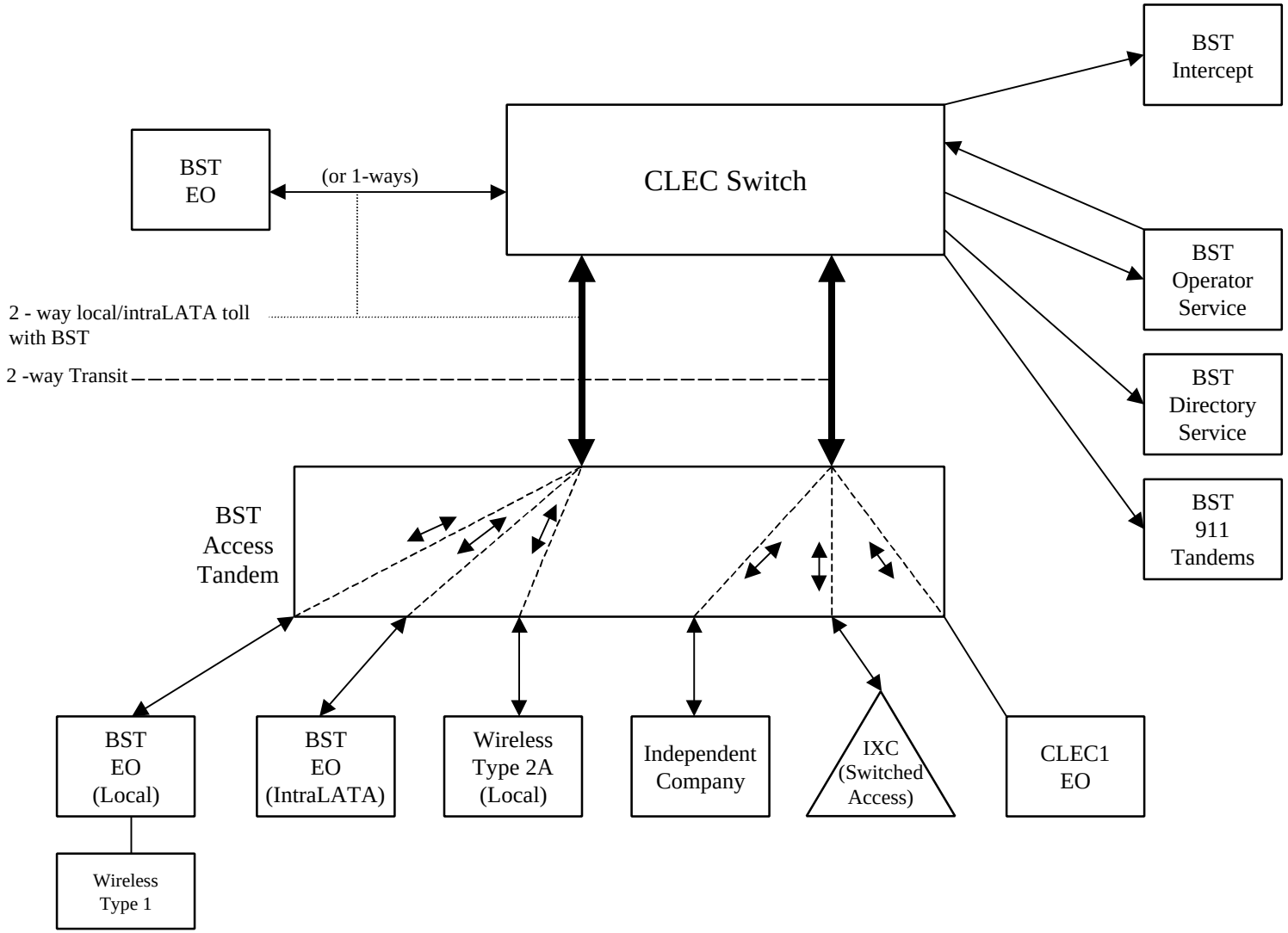

Exhibit E

Supergroup Architecture

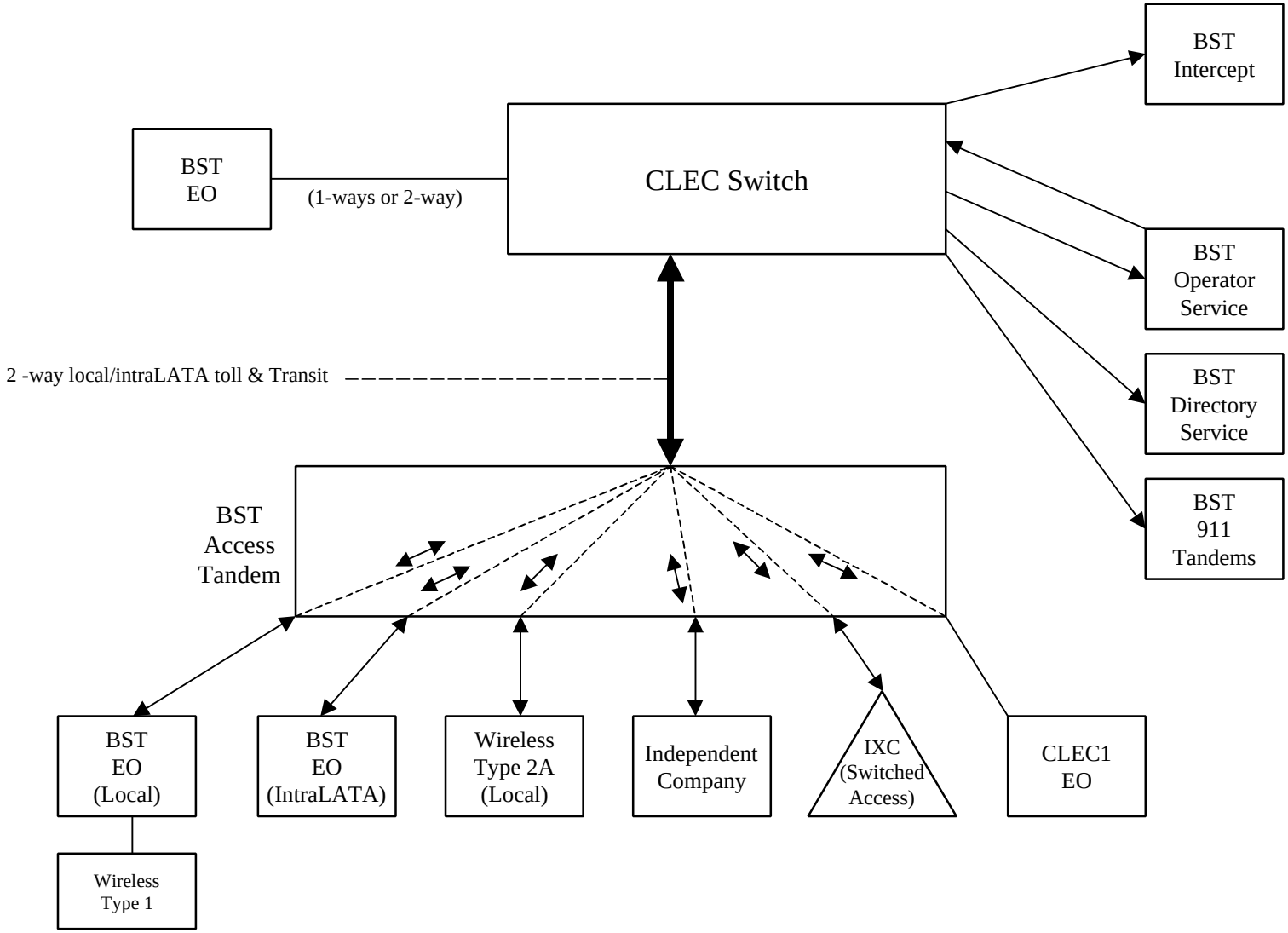

BELLSOUTH/API RATES
LOCAL INTERCONNECTION

		RATES BY STATE								
DESCRIPTION	**USOC**	**AL**	**FL**	**GA**	**KY**	**LA**	**MS**	**NC**	**SC**	**TN**
LOCAL INTERCONNECTION (CALL TRANSPORT AND TERMINATION)										
End Office Switching, per mou	N/A	$0.0018	NA	$0.0016333	$0.002562	$0.00210	$0.0023771	$0.0015	$0.0019295	$0.0019
Direct Local Interconnection, per mou (same as End Office Switching in FL)		NA	$0.002	NA	NA	NA	NA	NA	NA	NA
Tandem Switching, per mou	N/A	$0.00063	$0.00029	$0.0006757	$0.001096	$0.0008	$0.0007834	$0.0006	$0.0006843	$0.000676
Tandem Local Interconnection, per mou (includes end office switching element)	N/A	NA	$0.00325	NA	NA	NA	NA	NA	NA	NA
Multiple Tandem Switching, per mou (applies to initial tandem only), effective 10/99	N/A	NA	$0.00125	NA	NA	NA	NA	NA	NA	NA
Local Intermediary, per mou (applies to transit traffic only)	N/A	NA	$0.00125	NA	NA	NA	NA	NA	NA	NA
Tandem Intermediary Charge, per mou*	N/A	$0.0015	NA	NA	$0.001096	NA	NA	NA	NA	NA
*(This charge is applicable only to transit traffic and is applied in addition to applicable switching and/or interconnection charges.)										
TRUNK CHARGE										
Interim charges, both non-recurring and recurring, associated with interconnecting trunk groups between BellSouth and CLEC-1 shall be as set forth in this Exhibit. At such time as BellSouth develops a final cost based rate for such interconnecting trunk groups, the Parties shall amend this agreement to include such final cost based rates and shall true up such charges in accordance with this Attachment.										
Installation Trunk Side Service - per DS0										
NRC - 1st	TPP++	$333.69	$336.43	$333.28	$334.09	$334.94	$334.11	$333.54	$335.14	$334.29
NRC - Add'l	TPP++	$56.91	$57.38	$56.84	$57.12	$56.98	$56.98	$56.88	$57.16	$57.01
INTEROFFICE TRANSPORT										
Common (Shared) Transport										
Common (Shared) Transport per mile per mou	N/A	$0.00001	$0.000012	$0.000008	$0.0000049	$0.0000083	$0.0000091	$0.00001	$0.0000121	$0.00004
Common (Shared) Transport Facilities Termination per mou	N/A	$0.00045	$0.0005	$0.0004152	$0.000426	$0.00047	$0.0004281	$0.00034	$0.0004672	$0.00036
Interoffice Channel Transport - Dedicated - VG										
Interoffice Transport - Dedicated - 2-wire VG										
2-Wire VG - per mile per month	1L5XF	$0.0339	$0.0098	$0.0222	NA	$0.0384	NA	$0.0282	$0.0373	$0.0173
2-Wire VG - Facility Termination per month	1L5XF	$18.49	$26.52	$17.07	NA	$19.10	NA	$18.01	$21.42	$18.33
NRC - 2-wire VG - Facility Termination -1st	1L5XF	$107.11	$81.09	$79.61	NA	$76.20	NA	$137.48	$136.44	$55.39
NRC - 2-wire VG - Facility Termination - Add'l	1L5XF	$48.27	$54.83	$36.08	NA	$34.54	NA	$52.58	$51.37	$17.37
NRC - 2-wire VG -Facility Termination - Disconnect Charge -1st	1L5XF	$37.16	$31.01	NA	NA	$28.03	NA	NA	NA	$27.96
NRC - 2-wire VG - Facility Termination - Disconnect Charge -Add'l	1L5XF	$5.88	$12.78	NA	NA	$5.37	NA	NA	NA	$3.51
NRC - Manual Svc Order, per LSR	SOMAN	NA	$21.56	NA	NA	NA	NA	NA	NA	$19.99
NRC - Manual Svc Order, per LSR disconnect	SOMAN	NA	$3.84	NA	NA	NA	NA	NA	NA	NA
NRC - Electronic Svc Order, per LSR	SOMEC	$3.50	$2.75	$3.50	NA	$3.50	NA	$3.50	$3.50	$3.50
NRC - Electronic Svc Order, per LSR disconnect	SOMEC	NA	$0.42	NA	NA	NA	NA	NA	NA	NA
NRC - 2-wire VG - Incremental Charge--Manual Svc Order - 1st	SOMAN	$27.37	NA	$18.94	NA	$18.14	NA	$38.07	$39.63	NA
NRC - 2-wire VG - Incremental Charge--Manual Svc Order - Add'l	SOMAN	$27.57	NA	$18.94	NA	$18.14	NA	$38.07	$39.63	NA
NRC - 2-wire VG - Incremental Charge--Manual Svc Order-Disconnect--1st	SOMAN	$12.97	NA	NA	NA	$8.06	NA	NA	NA	NA
NRC - 2-wire VG - Incremental Charge--Manual Svc Order-Disconnect--Add'l	SOMAN	$12.97	NA	NA	NA	$8.06	NA	NA	NA	NA
Interoffice Transport - Dedicated - 2 Wire VG - Kentucky & Mississippi										
2-Wire VG - per mile per month	1L5NF	NA	NA	NA	$0.0301	NA	$0.0323	NA	NA	NA
2-Wire VG - Facility Termination per month	1L5NF	NA	NA	NA	$27.66	NA	$21.33	NA	NA	NA
NRC - 2-wire VG - Facility Termination -1st	1L5NF	NA	NA	NA	$142.31	NA	$106.72	NA	NA	NA
NRC - 2-wire VG - Facility Termination - Add'l	1L5NF	NA	NA	NA	$56.21	NA	$48.83	NA	NA	NA
NRC - 2-wire VG -Facility Termination - Disconnect Charge -1st	1L5NF	NA	NA	NA	NA	NA	$38.05	NA	NA	NA

BELLSOUTH/API RATES
LOCAL INTERCONNECTION

		RATES BY STATE								
DESCRIPTION	**USOC**	**AL**	**FL**	**GA**	**KY**	**LA**	**MS**	**NC**	**SC**	**TN**
NRC - 2-wire VG - Facility Termination - Disconnect Charge -Add'l	1L5NF	NA	NA	NA	NA	NA	$7.23	NA	NA	NA
NRC - Manual Svc Order, per LSR	SOMAN	NA	NA	NA	$19.99	NA	NA	NA	NA	NA
NRC - Manual Svc Order, per LSR disconnect	SOMAN	NA	NA	NA	NA	NA	NA	NA	NA	NA
NRC - Electronic Svc Order, per LSR	SOMEC	NA	NA	NA	$3.50	NA	$3.50	NA	NA	NA
NRC - Electronic Svc Order, per LSR disconnect	SOMEC	NA	NA	NA	NA	NA	NA	NA	NA	NA
NRC - 2-wire VG - Incremental Charge--Manual Svc Order - 1st	SOMAN	NA	NA	NA	NA	NA	$25.52	NA	NA	NA
NRC - 2-wire VG - Incremental Charge--Manual Svc Order - Add'l	SOMAN	NA	NA	NA	NA	NA	$25.52	NA	NA	NA
NRC - 2-wire VG - Incremental Charge--Manual Svc Order-Disconnect--1st	SOMAN	NA	NA	NA	NA	NA	$11.34	NA	NA	NA
NRC - 2-wire VG - Incremental Charge--Manual Svc Order-Disconnect--Add'l	SOMAN	NA	NA	NA	NA	NA	$11.34	NA	NA	NA
Interoffice Transport - Dedicated - DS0 - 56/64 KBPS										
DS0 - per mile per month	1L5XK	$0.0339	$0.0098	$0.0222	NA	$0.0384	NA	$0.0282	$0.0373	$0.1730
DS0 - Facility Termination per month	1L5XK	$17.81	$19.31	$16.45	NA	$18.37	NA	$17.40	$20.71	$17.74
NRC - DS0 - Facility Termination - 1st	1L5XK	$107.11	$81.11	$79.61	NA	$76.20	NA	$137.48	$136.44	$55.39
NRC - DS0 - Facility Termination - Add'l	1L5XK	$48.27	$54.83	$36.08	NA	$34.54	NA	$52.58	$51.37	$17.37
NRC - DS0 -Facility Termination - Disconnect Charge - 1st	1L5XK	$37.16	$31.01	NA	NA	$28.03	NA	NA	NA	$27.96
NRC - DS0 - Facility Termination - Disconnect Charge - Add'l	1L5XK	$5.88	$12.78	NA	NA	$5.37	NA	NA	NA	$3.51
NRC - Manual Svc Order, per LSR	SOMAN	NA	$21.56	NA	NA	NA	NA	NA	NA	$19.99
NRC - Manual Svc Order, per LSR disconnect	SOMAN	NA	$3.84	NA	NA	NA	NA	NA	NA	NA
NRC - Electronic Svc Order, per LSR	SOMEC	$3.50	$2.77	$3.50	NA	$3.50	NA	$3.50	$3.50	$3.50
NRC - Electronic Svc Order, per LSR disconnect	SOMEC	NA	$0.42	NA	NA	NA	NA	NA	NA	NA
NRC - DS0 -Incremental Charge--Manual Svc Order - 1st	SOMAN	$27.37	NA	$18.94	NA	$18.14	NA	$38.07	$39.63	NA
NRC -DS0 - Incremental Charge--Manual Svc Order - Add'l	SOMAN	$27.37	NA	$18.94	NA	$18.14	NA	$38.07	$39.63	NA
NRC - DS0 -Incremental Charge--Manual Svc Order-Disconnect--1st	SOMAN	$12.97	NA	NA	NA	$8.06	NA	NA	NA	NA
NRC - DS0 -Incremental Charge--Manual Svc Order-Disconnect—Add'l	SOMAN	$12.97	NA	NA	NA	$8.06	NA	NA	NA	NA
Interoffice Transport - Dedicated - DS0 - 56/64 KBPS - Kentucky & Mississippi										
DS0 - per mile per month	1L5NK	NA	NA	NA	$0.0301	NA	$0.0323	NA	NA	NA
DS0 - Facility Termination per month	1L5NK	NA	NA	NA	$26.95	NA	$20.64	NA	NA	NA
NRC - DS0 - Facility Termination - 1st	1L5NK	NA	NA	NA	$142.31	NA	$106.72	NA	NA	NA
NRC - DS0 - Facility Termination - Add'l	1L5NK	NA	NA	NA	$56.21	NA	$48.83	NA	NA	NA
NRC - DS0 -Facility Termination - Disconnect Charge - 1st	1L5NK	NA	NA	NA	NA	NA	$38.05	NA	NA	NA
NRC - DS0 - Facility Termination - Disconnect Charge - Add'l	1L5NK	NA	NA	NA	NA	NA	$7.23	NA	NA	NA
NRC - Manual Svc Order, per LSR	SOMAN	NA	NA	NA	$19.99	NA	NA	NA	NA	NA
NRC - Manual Svc Order, per LSR disconnect	SOMAN	NA	NA	NA	NA	NA	NA	NA	NA	NA
NRC - Electronic Svc Order, per LSR	SOMEC	NA	NA	NA	$3.50	NA	$3.50	NA	NA	NA
NRC - Electronic Svc Order, per LSR disconnect	SOMEC	NA	NA	NA	NA	NA	NA	NA	NA	NA
NRC - DS0 -Incremental Charge--Manual Svc Order - 1st	SOMAN	NA	NA	NA	$37.21	NA	$25.52	NA	NA	NA
NRC -DS0 - Incremental Charge--Manual Svc Order - Add'l	SOMAN	NA	NA	NA	$37.21	NA	$25.52	NA	NA	NA
NRC - DS0 -Incremental Charge--Manual Svc Order-Disconnect--1st	SOMAN	NA	NA	NA	NA	NA	$11.31	NA	NA	NA
NRC - DS0 -Incremental Charge--Manual Svc Order-Disconnect—Add'l	SOMAN	NA	NA	NA	NA	NA	$11.34	NA	NA	NA
Interoffice Transport - Dedicated - DS1										
DS1 - per mile per month	1L5XL	$0.6920	$0.6013	$0.4523	NA	$0.7831	NA	$0.5753	$0.7598	$0.3525
DS1 -Facility Termination per month	1L5XL	$79.69	$99.79	$78.47	NA	$93.40	NA	$71.29	$94.98	$75.83
NRC - DS1-Facility Termination - 1st	1L5XL	$198.15	$45.91	$147.07	NA	$140.49	NA	$217.17	$216.27	$145.98

BELLSOUTH/API RATES
LOCAL INTERCONNECTION

		RATES BY STATE								
DESCRIPTION	**USOC**	**AL**	**FL**	**GA**	**KY**	**LA**	**MS**	**NC**	**SC**	**TN**
NRC - DS1 - Facility Termination - Add'l	1L5XL	$148.18	$44.18	$111.75	NA	$106.69	NA	$163.75	$162.70	$109.85
NRC - DS1 - Facility Termination - Disconnect Charge - 1st	1L5XL	$25.44	$30.30	NA	NA	$20.00	NA	NA	NA	$19.55
NRC - DS1 - Facility Termination -Disconnect Charge - Add'l	1L5XL	$20.42	$26.76	NA	NA	$16.34	NA	NA	NA	$14.99
NRC - Manual Svc Order, per LSR	SOMAN	NA	$21.56	NA	NA	NA	NA	NA	NA	$19.99
NRC - Manual Svc Order, per LSR disconnect	SOMAN	NA	$3.84	NA	NA	NA	NA	NA	NA	NA
NRC - Electronic Svc Order, per LSR	SOMEC	$3.50	$2.77	$3.50	NA	$3.50	NA	$3.50	$3.50	$3.50
NRC - Electronic Svc Order, per LSR disconnect	SOMEC	NA	$0.42	NA	NA	NA	NA	NA	NA	NA
NRC - DS1 - Incremental Charge--Manual Svc Order - 1st	SOMAN	$27.37	NA	$18.94	NA	$18.14	NA	$38.07	$39.63	NA
NRC -DS1 - Incremental Charge--Manual Svc Order - Add'l	SOMAN	$27.37	NA	$18.94	NA	$18.14	NA	$38.07	$39.63	NA
NRC - DS1 - Incremental Charge--Manual Svc Order-Disconnect--1st	SOMAN	$12.97	NA	NA	NA	$8.06	NA	NA	NA	NA
NRC - DS1 - Incremental Charge--Manual Svc Order-Disconnect—Add'l	SOMAN	$12.97	NA	NA	NA	$8.06	NA	NA	NA	NA
Interoffice Transport - Dedicated - DS1 - Kentucky & Mississippi										
DS1 - per mile per month	1L5NL	NA	NA	NA	$0.4500	NA	$0.6598	NA	NA	NA
DS1 -Facility Termination per month	1L5NL	NA	NA	NA	$55.05	NA	$74.40	NA	NA	NA
NRC - DS1-Facility Termination - 1st	1L5NL	NA	NA	NA	$298.18	NA	$196.28	NA	NA	NA
NRC - DS1 - Facility Termination - Add'l	1L5NL	NA	NA	NA	$231.23	NA	$147.31	NA	NA	NA
NRC - DS1 - Facility Termination - Disconnect Charge - 1st	1L5NL	NA	NA	NA	NA	NA	$26.56	NA	NA	NA
NRC - DS1 - Facility Termination -Disconnect Charge - Add'l	1L5NL	NA	NA	NA	NA	NA	$21.61	NA	NA	NA
NRC - Manual Svc Order, per LSR	SOMAN	NA	NA	NA	$19.99	NA	NA	NA	NA	NA
NRC - Manual Svc Order, per LSR disconnect	SOMAN	NA	NA	NA	NA	NA	NA	NA	NA	NA
NRC - Electronic Svc Order, per LSR	SOMEC	NA	NA	NA	$3.50	NA	$3.50	NA	NA	NA
NRC - Electronic Svc Order, per LSR disconnect	SOMEC	NA	NA	NA	NA	NA	NA	NA	NA	NA
NRC - DS1 - Incremental Charge--Manual Svc Order - 1st	SOMAN	NA	NA	NA	NA	NA	$25.52	NA	NA	NA
NRC -DS1 - Incremental Charge--Manual Svc Order - Add'l	SOMAN	NA	NA	NA	NA	NA	$25.52	NA	NA	NA
NRC - DS1 - Incremental Charge--Manual Svc Order-Disconnect--1st	SOMAN	NA	NA	NA	NA	NA	$11.31	NA	NA	NA
NRC - DS1 - Incremental Charge--Manual Svc Order-Disconnect—Add'l	SOMAN	NA	NA	NA	NA	NA	$11.34	NA	NA	NA
Interoffice Transport - Dedicated - DS3										
DS3 - per mile per month	1L5XM	$4.98	$4.17	$2.72	NA	$14.04	NA	$12.98	$8.13	$5.89
DS3 -Facility Termination per month	1L5XM	$898.15	$1,121.93	$788.00	NA	$1,101	NA	$720.38	$967.70	$760.20
NRC - DS3 - Facility Termination -1st	1L5XM	$511.77	$557.69	$511.10	NA	$611.41	NA	$794.94	$606.72	$625.91
NRC - DS3 - Facility Termination - Add'l	1L5XM	$330.92	$325.61	$330.77	NA	$304.90	NA	$579.55	$423.45	$311.39
NRC - DS3 - Facility Termination - Disconnect Charge - 1st	1L5XM	$121.72	$111.56	$122.31	NA	$102.16	NA	NA	NA	$103.36
NRC - DS3 - Facility Termination - Disconnect Charge - Add'l	1L5XM	$118.54	$108.34	$119.14	NA	$99.46	NA	NA	NA	$100.59
NRC - Manual Svc Order, per LSR	SOMAN	NA	$21.56	NA	NA	NA	NA	NA	NA	$19.99
NRC - Manual Svc Order, per LSR disconnect	SOMAN	NA	$3.84	NA	NA	NA	NA	NA	NA	NA
NRC - Electronic Svc Order, per LSR	SOMEC	$3.50	$2.77	$3.50	NA	$3.50	NA	$3.50	$3.50	$3.50
NRC - Electronic Svc Order, per LSR disconnect	SOMEC	NA	$0.42	NA	NA	NA	NA	NA	NA	NA
NRC - DS3 - Incremental Charge--Manual Svc Order - 1st	SOMAN	$38.48	NA	$37.55	NA	$50.25	NA	$91.26	$54.26	NA
NRC - DS3 - Incremental Charge--Manual Svc Order - Add'l	SOMAN	$38.48	NA	$37.55	NA	$50.25	NA	$91.26	$54.26	NA
NRC - DS3 - Incremental Charge--Manual Svc Order-Disconnect--1st	SOMAN	$19.03	NA	$18.03	NA	$20.94	NA	NA	NA	NA
NRC - DS3 - Incremental Charge--Manual Svc Order-Disconnect—Add'l	SOMAN	$19.03	NA	$18.03	NA	$20.94	NA	NA	NA	NA
Interoffice Transport - Dedicated - DS3 - Kentucky & Mississippi										
DS3 - per mile per month	1L5NM	NA	NA	NA	$12.62	NA	$15.02	NA	NA	NA
DS3 -Facility Termination per month	1L5NM	NA	NA	NA	$1,204	NA	$744.38	NA	NA	NA

BELLSOUTH/API RATES
LOCAL INTERCONNECTION

		RATES BY STATE								
DESCRIPTION	**USOC**	**AL**	**FL**	**GA**	**KY**	**LA**	**MS**	**NC**	**SC**	**TN**
NRC - DS3 - Facility Termination -1st	1L5NM	NA	NA	NA	$946.23	NA	$686.74	NA	NA	NA
NRC - DS3 - Facility Termination - Add'l	1L5NM	NA	NA	NA	$516.89	NA	$477.76	NA	NA	NA
NRC - DS3 - Facility Termination - Disconnect Charge - 1st	1L5NM	NA	NA	NA	NA	NA	$125.56	NA	NA	NA
NRC - DS3 - Facility Termination - Disconnect Charge - Add'l	1L5NM	NA	NA	NA	NA	NA	$118.79	NA	NA	NA
NRC - Manual Svc Order, per LSR	SOMAN	NA	NA	NA	$19.99	NA	NA	NA	NA	NA
NRC - Manual Svc Order, per LSR disconnect	SOMAN	NA	NA	NA	NA	NA	NA	NA	NA	NA
NRC - Electronic Svc Order, per LSR	SOMEC	NA	NA	NA	$3.50	NA	$3.50	NA	NA	NA
NRC - Electronic Svc Order, per LSR disconnect	SOMEC	NA	NA	NA	NA	NA	NA	NA	NA	NA
NRC - DS3 - Incremental Charge--Manual Svc Order - 1st	SOMAN	NA	NA	NA	$93.12	NA	$64.97	NA	NA	NA
NRC - DS3 - Incremental Charge--Manual Svc Order - Add'l	SOMAN	NA	NA	NA	$93.12	NA	$64.97	NA	NA	NA
NRC - DS3 - Incremental Charge--Manual Svc Order-Disconnect--1st	SOMAN	NA	NA	NA	NA	NA	$27.08	NA	NA	NA
NRC - DS3 - Incremental Charge--Manual Svc Order-Disconnect—Add'l	SOMAN	NA	NA	NA	NA	NA	$27.08	NA	NA	NA
Local Channel - Dedicated										
Local Channel - Dedicated - 2-Wire VG										
Monthly Recurring per month	TEFV2	$14.61	$29.33	$13.91	$22.26	$14.94	$17.83	$14.83	$16.83	$19.02
NRC - 2-wire VG - Facility Termination - 1st	TEFV2	$494.65	$386.34	$382.95	$585.15	$347.49	$487.62	$553.80	$554.00	$199.33
NRC - 2-wire VG - Facility Termination - Add'l	TEFV2	$84.44	$66.36	$62.40	$98.53	$59.75	$84.35	$89.69	$88.58	$24.16
NRC - 2-wire VG - Facility Termination - Disconnect - 1st	TEFV2	$77.81	$67.91	NA	$11.99	$53.68	$77.69	NA	NA	$54.81
NRC - 2-wire VG - Facility Termination - Disconnect - Add'l	TEFV2	$7.63	$5.92	NA	NA	$6.60	$8.95	NA	NA	$4.80
NRC - Manual Svc Order, per LSR	SOMAN	NA	$21.56	NA	$19.99	NA	NA	NA	NA	$19.99
NRC - Manual Svc Order, per LSR disconnect	SOMAN	NA	$3.84	NA	NA	NA	NA	NA	NA	NA
NRC - Electronic Svc Order, per LSR	SOMEC	$3.50	$2.75	$3.50	$3.50	$3.50	$3.50	$3.50	$3.50	$3.50
NRC - Electronic Svc Order, per LSR disconnect	SOMEC	NA	$0.42	NA	NA	NA	NA	NA	NA	NA
NRC - 2-wire VG - Incremental Charge--Manual Svc Order - 1st	SOMAN	$27.37	NA	$18.94	NA	$18.14	$25.52	$42.17	$43.75	NA
NRC - 2-wire VG - Incremental Charge--Manual Svc Order - Add'l	SOMAN	$18.37	NA	$8.42	NA	$8.06	$11.34	$12.76	$13.55	NA
NRC - 2-wire VG - Incremental Cost - Manual Svc. Order vs. Elect-Disconnect-1st	SOMAN	$17.75	NA	NA	NA	$11.40	$16.05	NA	NA	NA
Local Channel - Dedicated - 4-Wire VG										
Monthly Recurring per month	TEFV4	$15.77	$30.50	$14.99	$23.38	$16.21	$19.03	$15.87	$18.05	$20.14
NRC - 4-Wire VG - 1st	TEFV4	$502.43	$387.21	$368.44	$585.15	$352.75	$495.25	$562.23	$562.46	$201.53
NRC - 4-Wire VG - Add'l	TEFV4	$86.68	$67.22	$64.05	$98.53	$61.33	$86.56	$92.67	$91.57	$24.83
NRC - 4-Wire VG - Disconnect Chg - 1st	TEFV4	$78.71	$68.78	NA	NA	$54.36	$78.58	NA	NA	$55.52
NRC - 4-Wire VG - Disconnect Chg - Add'l	TEFV4	$8.53	$6.79	NA	NA	$7.28	$9.84	NA	NA	$5.51
NRC - Manual Svc Order, per LSR	SOMAN	NA	$21.56	NA	$19.99	NA	NA	NA	NA	$19.99
NRC - Manual Svc Order, per LSR disconnect	SOMAN	NA	$3.84	NA	NA	NA	NA	NA	NA	NA
NRC - Electronic Svc Order, per LSR	SOMEC	NA	$2.75	$3.50	$3.50	$3.50	$3.50	$3.50	$3.50	$3.50
NRC - Electronic Svc Order, per LSR disconnect	SOMEC	$3.50	$0.42	NA	NA	NA	NA	NA	NA	NA
NRC - 4-Wire VG - Incremental Charge--Manual Svc Order - 1st	SOMAN	$27.37	NA	$18.94	NA	$18.14	$25.52	$42.17	$43.64	NA
NRC - 4-Wire VG - Incremental Charge--Manual Svc Order - Add'l	SOMAN	$18.73	NA	$8.42	NA	$8.06	$11.34	$12.76	$13.55	NA
Local Channel - Dedicated - DS1										
DS1 Monthly Recurring per month	TEFHG	$35.52	$43.53	$38.36	$43.80	$43.80	$38.91	$35.68	$37.20	$40.27
NRC - DS1 - 1st	TEFHG	$503.57	$242.45	$356.15	$538.95	$348.56	$494.83	$534.48	$534.81	$277.35
NRC - DS1 - Add'l	TEFHG	$442.84	$226.44	$312.89	$464.94	$300.30	$435.28	$462.69	$462.81	$233.26
NRC - DS1 - Disconnect Chg - 1st	TEFHG	$46.28	$41.13	NA	NA	$24.15	$46.85	NA	NA	$33.18
NRC - DS1 - Disconnect Chg - Add'l	TEFHG	$32.18	$28.28	NA	NA	$21.31	$33.02	NA	NA	$22.30

BELLSOUTH/API RATES
LOCAL INTERCONNECTION

		RATES BY STATE								
DESCRIPTION	**USOC**	**AL**	**FL**	**GA**	**KY**	**LA**	**MS**	**NC**	**SC**	**TN**
NRC - Manual Svc Order, per LSR	SOMAN	NA	$21.56	NA	$19.99	NA	NA	NA	NA	$19.99
NRC - Manual Svc Order, per LSR disconnect	SOMAN	NA	$3.84	NA	NA	NA	NA	NA	NA	NA
NRC - Electronic Svc Order, per LSR	SOMEC	$3.50	$2.75	$3.50	$3.50	$3.50	$3.50	$3.50	$3.50	$3.50
NRC - Electronic Svc Order, per LSR disconnect	SOMEC	NA	$0.42	NA	NA	NA	NA	NA	NA	NA
NRC - DS1 - Incremental Charge--Manual Svc Order - 1st	SOMAN	$61.95	NA	$44.22	$87.71	$42.34	$59.58	$86.15	$87.99	NA
NRC - DS1 - Incremental Charge--Manual Svc Order - Add'l	SOMAN	$0.00	NA	NA	NA	NA	NA	$1.77	$3.11	NA
Local Channel - Dedicated - DS3										
DS3 - Facility Termination per month	TEFHJ	$541.78	$570.06	$550.01	$697.89	$696.07	$533.33	$498.87	$498.58	$633.15
NRC - DS3 - Facility Termination - 1st	TEFHJ	$640.54	$903.37	$639.50	$1,091.00	$594.71	$526.67	$562.25	$735.42	$726.16
NRC - DS3 - Facility Termination - Add'l	TEFHJ	$426.28	$528.05	$426.40	$661.23	$396.54	$493.71	$527.88	$519.31	$411.64
NRC - DS3 - Facility Termination - Disconnect - 1st	TEFHJ	$121.72	$221.46	$122.31	NA	$113.75	$42.41	NA	NA	$103.36
NRC - DS3 - Facility Termination - Disconnect - Add'l	TEFHJ	$118.54	$154.90	$119.14	NA	$110.80	$40.87	NA	NA	$100.59
NRC - Manual Svc Order, per LSR	SOMAN	NA	$21.56	NA	$19.99	NA	NA	NA	NA	$19.99
NRC - Manual Svc Order, per LSR disconnect	SOMAN	NA	$3.84	NA	NA	NA	NA	NA	NA	NA
NRC - Electronic Svc Order, per LSR	SOMEC	$3.50	$2.75	$3.50	$3.50	$3.50	$3.50	$3.50	$3.50	$3.50
NRC - Electronic Svc Order, per LSR disconnect	SOMEC	NA	$0.42	NA	NA	NA	NA	NA	NA	NA
NRC - DS3 -Incremental Charge--Manual Svc Order - 1st	SOMAN	$38.48	NA	$37.55	$93.12	$50.25	$31.49	$56.25	$54.26	NA
NRC - DS3 - Incremental Charge--Manual Svc Order - Add'l	SOMAN	$38.48	NA	$37.55	$93.12	$50.25	$31.49	$56.25	$54.26	NA
NRC - DS3 - Incremental Charge--Manual Svc Order-Disconnect -1st	SOMAN	$19.03	NA	$18.03	NA	$20.94	$25.35	NA	NA	NA
NRC - DS3 - Incremental Charge--Manual Svc Order-Disconnect-Add'l	SOMAN	$19.03	NA	$18.03	NA	$20.94	$25.35	NA	NA	NA
CHANNELIZATION										
DS3 Channelization (DS3 to DS1)										
per Channelized System (28 DS1) per month	SATCS	$188.51	$220.97	$188.78	NA	$182.64	NA	$243.76	$234.30	$185.94
NRC - 1st	SATCS	$71.76	$356.40	$72.50	NA	$60.96	NA	$77.90	NA	$61.09
NRC - Add'l	SATCS	$52.03	$188.00	$59.96	NA	$50.46	NA	$63.32	NA	$50.31
NRC -1st - Disconnect	SATCS	$17.22	$61.64	$11.02	NA	$7.55	NA	$4.61	$11.99	$3.91
NRC -Add'l - Disconnect	SATCS	$12.05	$58.98	$12.02	NA	$12.29	NA	$15.76	$12.05	$12.61
per Interface per month (COCI)	SATCO	$8.69	$14.40	$8.66	NA	$8.80	NA	$11.28	$8.68	$9.03
NRC - 1st	SATCO	NA	$13.16	NA	NA	NA	NA	NA	NA	$19.99
NRC - Add'l	SATCO	NA	$9.43	NA	NA	NA	NA	NA	NA	NA
NRC - Manual Svc Order, per LSR	SOMEC	$3.50	$21.56	$3.50	NA	$3.50	NA	$3.50	$3.50	$3.50
NRC - Manual Svc Order, per LSR disconnect	SOMAN	NA	$3.84	NA	NA	NA	NA	NA	NA	NA
NRC - Electronic Svc Order, per LSR	SOMAN	$15.61	NA	$14.91	NA	$19.74	NA	$28.13	$25.59	$21.71
NRC - Electronic Svc Order, per LSR disconnect	SOMAN	$7.39	NA	$6.63	NA	$8.77	NA	$13.33	$8.92	$10.46
Channel System - Incremental Cost - Manual Svc. Order vs. Electronic -1st	SOMAN	$11.67	NA	$10.82	NA	$12.43	NA	$18.26	NA	$14.21
Channel System - Incremental Cost - Manual Svc. Order vs. Electronic -Add'l	SOMAN	$0.9469	NA	NA	NA	NA	NA	$1.48	NA	$1.46
DS3 Channelization (DS3 to DS1) - Kentucky & Mississippi										
per Channelized System (28 DS1) per month	SATNS	NA	NA	NA	$236.32	NA	$247.40	NA	NA	NA
NRC - 1st	SATNS	NA	NA	NA	$425.41	NA	$79.94	NA	NA	NA
NRC - Add'l	SATNS	NA	NA	NA	$303.33	NA	$65.20	NA	NA	NA
NRC -1st - Disconnect	SATNS	NA	NA	NA	NA	NA	$5.58	NA	NA	NA
NRC -Add'l - Disconnect	SATNS	NA	NA	NA	NA	NA	$15.85	NA	NA	NA
per Interface per month (COCI)	SATCO	NA	NA	NA	$8.52	NA	$11.35	NA	NA	NA

BELLSOUTH/API RATES
LOCAL INTERCONNECTION

		RATES BY STATE								
DESCRIPTION	**USOC**	**AL**	**FL**	**GA**	**KY**	**LA**	**MS**	**NC**	**SC**	**TN**
NRC - 1st	SATCO	NA	NA	NA	$19.99	NA	NA	NA	NA	NA
NRC - Add'l	SATCO	NA	NA	NA	NA	NA	NA	NA	NA	NA
NRC - Manual Svc Order, per LSR	SOMAN	NA	NA	NA	$3.50	NA	$3.50	NA	NA	NA
NRC - Manual Svc Order, per LSR disconnect	SOMAN	NA	NA	NA	NA	NA	NA	NA	NA	NA
NRC - Electronic Svc Order, per LSR	SOMEC	NA	NA	NA	NA	NA	$26.95	NA	NA	NA
NRC - Electronic Svc Order, per LSR disconnect	SOMEC	NA	NA	NA	NA	NA	$11.98	NA	NA	NA
Channel System - Incremental Cost - Manual Svc. Order vs. Electronic -1st	SOMAN	NA	NA	NA	$41.47	NA	$16.97	NA	NA	NA
Channel System - Incremental Cost - Manual Svc. Order vs. Electronic -Add'l	SOMAN	NA	NA	NA	$11.99	NA	NA	NA	NA	NA
DS1 Channelization (DS1 to DS0)										
per Channelized System (24 DS0) per month	SATC1	$136.82	$153.60	$126.22	NA	$209.87	NA	$177.72	$147.51	$165.21
NRC - 1st	SATC1	$197.98	$182.14	$198.22	NA	$193.63	NA	$267.19	$220.89	$197.21
NRC - Add'l	SATC1	$123.12	$125.18	$123.59	NA	$118.37	NA	$161.43	$137.15	$119.99
NRC -1sr - Disconnect	SATC1	$30.18	$19.52	$31.03	NA	$26.44	NA	$34.55	NA	$25.66
NRC -Add'l - Disconnect	SATC1	$18.86	$18.14	$19.75	NA	$16.83	NA	$21.14	NA	$15.81
- Interface (COCI)										
per OCU-DP(data) card per month (2.4-64kbs)	SATSA	$1.66	$2.20	$1.86	NA	$3.12	NA	$2.88	$2.34	$2.46
NRC - 1st	SATSA	$12.05	$13.16	$12.02	NA	$12.29	NA	$15.76	$12.05	$12.61
NRC - Add'l	SATSA	$8.69	$9.43	$8.66	NA	$8.80	NA	$11.28	$8.68	$9.03
per BRITE card per month	SATSA	$3.41	$3.83	$3.71	NA	$4.18	NA	$3.76	$4.21	$3.33
NRC - 1st	SATSA	$12.05	$13.16	$12.02	NA	$12.29	NA	$15.76	$12.05	$12.61
NRC - Add'l	SATSA	$8.69	$9.43	$8.66	NA	$8.80	NA	$11.28	$8.68	$9.03
per VG card per month (DS0)	SATSA	$0.86	$1.45	$1.17	NA	$1.62	NA	$1.64	$1.47	$1.25
NRC - 1st	SATSA	$12.05	$13.16	$12.02	NA	$12.29	NA	$15.76	$12.05	$12.61
NRC - Add'l	SATSA	$8.69	$9.43	$8.66	NA	$8.80	NA	$11.28	$8.68	$9.03
NRC - Manual Svc Order, per LSR	SOMAN	NA	$21.56	NA	NA	NA	NA	NA	NA	$19.99
NRC - Manual Svc Order, per LSR disconnect	SOMAN	NA	$3.84	NA	NA	NA	NA	NA	NA	NA
NRC - Electronic Svc Order, per LSR	SOMEC	$3.50	$2.77	$3.50	NA	$3.50	NA	$3.50	$3.50	$3.50
NRC - Electronic Svc Order, per LSR disconnect	SOMEC	NA	$0.43	NA	NA	NA	NA	NA	NA	NA
Channel System - Incremental Cost - Manual Svc. Order vs. Electronic -1st	SOMAN	$15.61	NA	$14.75	NA	$19.74	NA	$28.13	$25.59	$25.66
Channel System - Incremental Cost - Manual Svc. Order vs. Electronic -Add'l	SOMAN	$7.39	NA	$6.55	NA	$8.77	NA	$13.33	$8.92	$15.81
Incremental Cost-Manual Svc. Order vs. Elect -Disconnect - 1st	SOMAN	$11.67	NA	$10.70	NA	$12.43	NA	$18.26	NA	$14.21
Incremental Cost-Manual Svc. Order vs. Elect -Disconnect - Add'l	SOMAN	$0.9469	NA	$0.00	NA	NA	NA	$1.48	NA	$1.46
DS1 Channelization (DS1 to DS0) - Kentucky & Mississippi										
per Channelized System (24 DS0) per month	SASTN1	NA	NA	NA	$200.01	NA	$146.87	NA	NA	NA
NRC - 1st	SASTN1	NA	NA	NA	$302.82	NA	$271.52	NA	NA	NA
NRC - Add'l	SASTN1	NA	NA	NA	$184.20	NA	$164.56	NA	NA	NA
NRC -1sr - Disconnect	SASTN1	NA	NA	NA	NA	NA	$36.38	NA	NA	NA
NRC -Add'l - Disconnect	SASTN1	NA	NA	NA	NA	NA	$11.98	NA	NA	NA
- Interface (COCI)										
per OCU-DP(data) card per month (2.4-64kbs)	SATSA	NA	NA	NA	$2.94	NA	$2.86	NA	NA	NA
NRC - 1st	SATSA	NA	NA	NA	$15.86	NA	$15.85	NA	NA	NA
NRC - Add'l	SATSA	NA	NA	NA	$11.36	NA	$11.35	NA	NA	NA
per BRITE card per month	SATSA	NA	NA	NA	$4.04	NA	$3.88	NA	NA	NA
NRC - 1st	SATSA	NA	NA	NA	$15.86	NA	$15.85	NA	NA	NA
NRC - Add'l	SATSA	NA	NA	NA	$11.36	NA	$11.35	NA	NA	NA
per VG card per month (DS0)	SATSA	NA	NA	NA	$1.40	NA	$1.45	NA	NA	NA
NRC - 1st	SATSA	NA	NA	NA	$15.86	NA	$15.85	NA	NA	NA
NRC - Add'l	SATSA	NA	NA	NA	$11.36	NA	$11.35	NA	NA	NA

Version 3Q00:09/29/00

BELLSOUTH/API RATES
LOCAL INTERCONNECTION

		RATES BY STATE								
DESCRIPTION	**USOC**	**AL**	**FL**	**GA**	**KY**	**LA**	**MS**	**NC**	**SC**	**TN**
NRC - Manual Svc Order, per LSR	SOMAN	NA	NA	NA	$19.99	NA	NA	NA	NA	NA
NRC - Manual Svc Order, per LSR disconnect	SOMAN	NA	NA	NA	NA	NA	NA	NA	NA	NA
NRC - Electronic Svc Order, per LSR	SOMEC	NA	NA	NA	$3.50	NA	$3.50	NA	NA	NA
NRC - Electronic Svc Order, per LSR disconnect	SOMEC	NA	NA	NA	NA	NA	NA	NA	NA	NA
Channel System - Incremental Cost - Manual Svc. Order vs. Electronic -1st	SOMAN	NA	NA	NA	$41.47	NA	$19.74	NA	NA	NA
Channel System - Incremental Cost - Manual Svc. Order vs. Electronic -Add'l	SOMAN	NA	NA	NA	$11.99	NA	$8.77	NA	NA	NA
Incremental Cost-Manual Svc. Order vs. Elect -Disconnect - 1st	SOMAN	NA	NA	NA	NA	NA	$12.43	NA	NA	NA
Incremental Cost-Manual Svc. Order vs. Elect -Disconnect - Add'l	SOMAN	NA	NA	NA	NA	NA	NA	NA	NA	NA
Local Interconnection Mid-Span Meet										
Local Channel - Dedicated - DS1										
DS1 Monthly Recurring per month	TEFHG	$14.84	$17.27	$15.95	$17.19	$19.93	$16.48	$16.58	$15.87	$17.90
NRC - DS1 - 1st	TEFHG	$546.69	$553.19	$545.80	$547.16	$548.70	$546.77	$546.22	$548.72	$547.48
NRC - DS1 - Add'l	TEFHG	$471.61	$477.22	$470.84	$472.01	$473.34	$471.68	$471.20	$473.36	$472.29
NRC - DS1 - Disconnect Chg - 1st	TEFHG	TBD	TBD	TBD	TBD	TBD	TBD	TBD	TBD	TBD
NRC - DS1 - Disconnect Chg - Add'l	TEFHG	TBD	TBD	TBD	TBD	TBD	TBD	TBD	TBD	TBD
NRC - DS1 - Incremental Charge--Manual Svc Order - 1st	SOMAN	$89.52	90.0705	$88.87	$89.09	$89.34	$89.03	$88.94	$89.34	$89.14
NRC - DS1 - Incremental Charge--Manual Svc Order - Add'l	SOMAN	$89.52	90.0705	88.8666	89.0879	89.3388	89.0255	$88.94	$89.34	$89.14
NRC - DS1 - Incremental Charge--Manual Svc Order-Disconnect	SOMAN	TBD	TBD	TBD	TBD	TBD	TBD	TBD	TBD	TBD
Local Channel - Dedicated - DS3										
DS3 - Facility Termination per month	TEFHJ	$214.60	$245.65	$231.61	$275.82	$287.11	$218.84	$232.80	$222.56	$285.50
NRC - DS3 - Facility Termination - 1st	TEFHJ	$1,066.46	$1,079.15	$1,064.72	$1,067.37	$1,070.38	$1,066.63	$1,065.55	$1,070.42	$1,068.00
NRC - DS3 - Facility Termination - Add'l	TEFHJ	$670.88	678.85.98	$669.79	$671.45	$673.34	$670.98	$670.31	$673.37	$671.85
NRC - DS1 - Disconnect Chg - 1st	TEFHJ	TBD	TBD	TBD	TBD	TBD	TBD	TBD	TBD	TBD
NRC - DS1 - Disconnect Chg - Add'l	TEFHJ	TBD	TBD	TBD	TBD	TBD	TBD	TBD	TBD	TBD
NRC - DS3 -Incremental Charge--Manual Svc Order - 1st	SOMAN	$94.49	$95.61	$94.34	$94.57	$94.84	$94.50	$94.41	$94.94	$94.63
NRC - DS3 - Incremental Charge--Manual Svc Order - Add'l	SOMAN	$94.49	$95.61	$94.34	$94.57	$94.84	$94.50	$94.41	$94.94	$94.63
NRC - DS1 - Incremental Charge--Manual Svc Order-Disconnect	SOMAN	TBD	TBD	TBD	TBD	TBD	TBD	TBD	TBD	TBD
NOTES:										
If no rate is identified in the contract, the rate for the specific service or function will be as set forth in applicable BellSouth tariff or as negotiated by the Parties upon request by either Party.										

Attachment 4

Physical Collocation

BELLSOUTH
PHYSICAL COLLOCATION

1. Scope of Attachment

1.1 Scope of Attachment. The rates, terms, and conditions contained within this Attachment shall only apply when API is occupying the Collocation Space as a sole occupant or as a Host within a Premises location pursuant to Section 4. This Attachment is applicable to Premises owned or leased by BellSouth. However, if the Premises occupied by BellSouth is leased by BellSouth from a third party, special considerations and intervals may apply in addition to the terms and conditions of this Attachment.

All the negotiated rates, terms and conditions set forth in this Attachment pertain to collocation and the provisioning of Collocation Space.

1.2 Right to Occupy. BellSouth shall offer to API collocation on rates, terms, and conditions that are just, reasonable, non-discriminatory and consistent with the rules of the Federal Communications Commission ("FCC"). Subject to Section 4 of this Attachment, BellSouth allows API to occupy that certain area designated by BellSouth within a BellSouth Premises, or on BellSouth property upon which the BellSouth Premises is located, of a size which is specified by API and agreed to by BellSouth (hereinafter "Collocation Space"). BellSouth Premises include BellSouth Central Offices and Serving Wire Centers. The necessary rates, terms and conditions for BellSouth locations other than BellSouth Premises shall be negotiated upon request for collocation at such location(s). Neither BellSouth nor any of BellSouth's affiliates may reserve space for future use on more preferential terms than those set forth above.

1.2.1 In all states other than Florida, the size specified by API may contemplate a request for space sufficient to accommodate API's growth within a two-year period.

1.2.2 In the state of Florida, the size specified by API may contemplate a request for space sufficient to accommodate API's growth within an eighteen (18) month period.

1.3 Space Reclamation. In the event of space exhaust within a Central Office Premises, BellSouth may include in its documentation for the Petition for Waiver filing any unutilized space in the Central Office Premises. API will be responsible for any justification of unutilized space within its space, if such justification is required by the appropriate state commission.

1.4 Use of Space. API shall use the Collocation Space for the purposes of installing, maintaining and operating API's equipment (to include testing and monitoring equipment) necessary for interconnection with BellSouth services and facilities, including access to unbundled network elements, for the provision of telecommunications services. Pursuant to Section 5 following, API may, at its option,

place API-owned fiber entrance facilities to the Collocation Space. The Collocation Space may be used for no other purposes except as specifically described herein or authorized in writing by BellSouth.

1.5 Rates and Charges. API agrees to pay the rates and charges identified in Exhibit A attached hereto.

1.6 Due Dates. In all states other than Georgia, if any due date contained in this Attachment falls on a weekend or National holiday, then the due date will be the next business day thereafter.

1.7 The parties agree to comply with all applicable federal, state, county, local and administrative laws, rules, ordinances, regulations and codes in the performance of their obligations hereunder.

2. Space Notification

2.1 Availability of Space. Upon submission of an Application pursuant to Section 6, BellSouth will permit API to physically collocate, pursuant to the terms of this Attachment, at any BellSouth Premises, unless BellSouth has determined that there is no space available due to space limitations or that physical collocation is not practical for technical reasons.

2.1.1 Availability Notification. Unless otherwise specified, BellSouth will respond to an application within ten (10) calendar days as to whether space is available or not available within a BellSouth Premises. This interval excludes National Holidays. If the amount of space requested is not available, BellSouth will notify API of the amount of space that is available.

2.1.2 BellSouth will respond to a Florida Application within fifteen (15) calendar days as to whether space is available or not available within a BellSouth Premises. If the amount of space requested is not available, BellSouth will notify API of the amount of space that is available.

2.1.3 BellSouth will respond to a Louisiana Application within ten (10) calendar days for space availability for one (1) to ten (10) Applications; fifteen (15) calendar days for eleven (11) to twenty (20) Applications; and for more than twenty (20) Applications, it is increased by five (5) calendar days for every five additional Applications received within five (5) business days. If the amount of space requested is not available, BellSouth will notify API of the amount of space that is available.

2.1.4 BellSouth will respond to a Mississippi Application within ten (10) business days as to whether space is available or not available within a BellSouth Premises. If the amount of space requested is not available, BellSouth will notify API of the amount of space that is available.

2.2 Reporting. Upon request from API, BellSouth will provide a written report ("Space Availability Report") specifying the amount of Collocation Space available at the Premises requested, the number of collocators present at the Premises, any modifications in the use of the space since the last report on the Premises requested and the measures BellSouth is taking to make additional space available for collocation arrangements.

2.2.1 The request from API for a Space Availability Report must be written and must include the Premises and Common Language Location Identification ("CLLI") code of the Premises. Such information regarding Premises and CLLI code is located in the National Exchange Carriers Association (NECA) Tariff FCC No. 4.

2.2.2 BellSouth will respond to a request for a Space Availability Report for a particular Premises within ten (10) calendar days of receipt of such request. BellSouth will make best efforts to respond in ten (10) calendar days to such a request when the request includes from two (2) to five (5) Premises within the same state. The response time for requests of more than five (5) Premises shall be negotiated between the Parties. If BellSouth cannot meet the ten calendar day response time, BellSouth shall notify API and inform API of the time frame under which it can respond.

2.2.2.1 In Mississippi, BellSouth will respond to a request for a Space Availability Report for a particular Premises within ten (10) business days of receipt of such request. BellSouth will make best efforts to respond in ten (10) business days to such a request when the request includes from two (2) to five (5) Premises within the same state. The response time for requests of more than five (5) Premises shall be negotiated between the Parties. If BellSouth cannot meet the ten business day response time, BellSouth shall notify API and inform API of the time frame under which it can respond.

2.3 Denial of Application. After notifying API that BellSouth has no available space in the requested Premises ("Denial of Application"), BellSouth will allow API, upon request, to tour the entire Premises within ten (10) calendar days of such Denial of Application. In order to schedule said tour within ten (10) calendar days, the request for a tour of the Premises must be received by BellSouth within five (5) calendar days of the Denial of Application.

2.3.1 Denial of Application. In Mississippi, after notifying API that BellSouth has no available space in the requested Premises ("Denial of Application"), BellSouth will allow API, upon request, to tour the entire Premises within ten (10) business days of such Denial of Application. In order to schedule said tour within ten (10) business days, the request for a tour of the Premises must be received by BellSouth within five (5) business days of the Denial of Application.

2.4 Filing of Petition for Waiver. Upon Denial of Application BellSouth will timely file a petition with the Commission pursuant to 47 U.S.C. § 251(c)(6). BellSouth shall provide to the Commission any information requested by that Commission. Such

information shall include which space, if any, BellSouth or any of BellSouth's affiliates have reserved for future use and a detailed description of the specific future uses for which the space has been reserved. Subject to an appropriate nondisclosure agreement or provision, BellSouth shall permit API to inspect any floor plans or diagrams that BellSouth provides to the Commission.

2.5 Waiting List. Unless otherwise specified, on a first-come, first-served basis governed by the date of receipt of an Application or Letter of Intent, BellSouth will maintain a waiting list of requesting carriers who have either received a Denial of Application or, where it is publicly known that the Premises is out of space, have submitted a Letter of Intent to collocate. BellSouth will notify the telecommunications carriers on the waiting list when space becomes available according to how much space becomes available and the position of telecommunications carrier on said waiting list. API must submit an updated, complete, and correct Application to BellSouth within 30 calendar days (in Mississippi, 30 business days) of such notification or notify BellSouth in writing within that time that API wants to maintain its place on the waiting list either without accepting such space or accepting an amount of space less than its original request. If API does not submit such an Application or notify BellSouth in writing as described above, BellSouth will offer such space to the next CLEC on the waiting list and remove API from the waiting list. Upon request, BellSouth will advise API as to its position on the list.

2.5.1 In Florida, on a first-come, first-served basis governed by the date of receipt of an Application or Letter of Intent, BellSouth will maintain a waiting list of requesting carriers who have either received a Denial of Application or, where it is publicly known that the Premises is out of space, have submitted a Letter of Intent to collocate. Sixty (60) days prior to space becoming available, if known, BellSouth will notify the Florida PSC and the telecommunications carriers on the waiting list by mail when space becomes available according to the position of telecommunications carrier on said waiting list. If not known sixty (60) days in advance, BellSouth shall notify the Florida PSC and the telecommunications carriers on the waiting list within two days of the determination that space is available.

2.6 Public Notification. BellSouth will maintain on its Interconnection Services website a notification document that will indicate all Central Offices that are without available space. BellSouth shall update such document within ten (10) calendar days (in Mississippi, 10 business days) of the Denial of Application due to Space Exhaust. BellSouth will also post a document on its Interconnection Services website that contains a general notice where space has become available in a Central Office previously on the space exhaust list. BellSouth shall allocate said available space pursuant to the waiting list referenced in Section 2.5.

2.7 Regulatory Agency Procedures. Notwithstanding the foregoing, should any state or federal regulatory agency impose procedures or intervals applicable to API that are different from procedures or intervals set forth in this section, whether now in effect or that become effective after execution of this Agreement, those procedures or

intervals shall supersede the requirements set forth herein for that jurisdiction for all applications submitted for the first time after the effective date thereof.

3. Collocation Options

3.1 Cageless. BellSouth shall allow API to collocate API's equipment and facilities without requiring the construction of a cage or similar structure. BellSouth shall allow API to have direct access to its equipment and facilities. BellSouth shall make cageless collocation available in single bay increments pursuant to Section 7. Except where API's equipment requires special technical considerations (e.g., special cable racking, isolated ground plane), BellSouth shall assign cageless Collocation Space in conventional equipment rack lineups where feasible. For equipment requiring special technical considerations, API must provide the equipment layout, including spatial dimensions for such equipment pursuant to generic requirements contained in BellCore (Telcordia) GR-63-Core and shall be responsible for constructing all special technical requirements associated with such equipment pursuant to Section 6 following.

3.2 Cages. BellSouth shall construct enclosures in compliance with API's collocation request. At API's request, BellSouth shall permit API to subcontract the construction of physical collocation arrangements with a contractor certified by BellSouth ("BellSouth Certified Contractor"), provided however, that BellSouth shall not unreasonably withhold approval of contractors.

3.3 When API subcontracts the construction, API must arrange with a BellSouth Certified Contractor to construct a collocation arrangement enclosure in accordance with BellSouth's guidelines and specifications prior to starting equipment installation and at API's sole expense. BellSouth will provide guidelines and specifications upon request. Where local building codes require enclosure specifications more stringent than BellSouth's standard enclosure specification, API and API's BellSouth Certified Contractor must comply with the more stringent local building code requirements. API's BellSouth Certified Contractor shall be responsible for filing and receiving any and all necessary permits and/or licenses for such construction. BellSouth shall cooperate with API and provide, at API's expense, the documentation, including architectural drawings, necessary for API to obtain the zoning, permits and/or other licenses. BellSouth shall pass on to API the costs of providing the documentation. The BellSouth Certified Contractor shall bill API directly for all work performed for API pursuant to this Attachment and BellSouth shall have no liability for nor responsibility to pay such charges imposed by the BellSouth Certified Contractor. API must provide the local BellSouth building contact with two Access Keys used to enter the locked enclosure. Except in case of emergency, BellSouth will not access API's locked enclosure prior to notifying API.

3.3.1 BellSouth may elect to review API's plans and specifications prior to allowing construction to start to ensure compliance with BellSouth's guidelines and specifications. BellSouth shall complete its review within fifteen (15) calendar days. API shall be able to design caged enclosures in amounts as small as sufficient to house and maintain a single rack or bay of equipment. If BellSouth reviews API's plans and specifications prior to construction, then BellSouth will have the right to inspect the enclosure after construction to make sure it is constructed according to the submitted plans and specifications. If BellSouth elects not to review API's plans and specifications prior to construction, API will be entitled to request BellSouth to review; and in the event API does not request a BellSouth review, BellSouth shall have the right to inspect the enclosure after construction to make sure it is constructed according to BellSouth's guidelines and specifications. BellSouth may require API to remove or correct within seven (7) calendar days at API's expense any structure that does not meet these plans and specifications or, where applicable, BellSouth guidelines and specifications.

3.4 Shared (Subleased) Caged Collocation. API may allow other telecommunications carriers to share API's caged collocation arrangement pursuant to terms and conditions agreed to by API ("Host") and other telecommunications carriers ("Guests") and pursuant to this section, except where the BellSouth Premises is located within a leased space and BellSouth is prohibited by said lease from offering such an option. API shall notify BellSouth in writing upon execution of any agreement between the Host and its Guest within ten (10) calendar days (in Mississippi, ten (10) business days) of its execution and prior to any Firm Order. Further, such notice shall include the name of the Guest(s) and the term of the agreement, and shall contain a certification by API that said agreement imposes upon the Guest(s) the same terms and conditions for Collocation Space as set forth in this Attachment between BellSouth and API.

3.4.1 API, as the host CLEC shall be the sole interface and responsible Party to BellSouth for the assessment and billing of rates and charges contained within this Attachment; and for the purposes of ensuring that the safety and security requirements of this Attachment are fully complied with by the Guest, its employees and agents. BellSouth shall prorate the costs of the collocation space based on the number of collocators and the space used by each. In all states other than Florida, and in addition to the foregoing, API shall be the responsible party to BellSouth for the purpose of submitting Applications for initial and additional equipment placement of Guest. In the event the Host and Guest jointly submit an initial Application, only one Application Fee will be assessed. A separate initial Guest application shall require the assessment of a Subsequent Application Fee, as set forth in Exhibit A, if this Application is not the initial Application made for the arrangement. Notwithstanding the foregoing, Guest may arrange directly with BellSouth for the provision of the interconnecting facilities between BellSouth and Guest and for the provision of the services and access to unbundled network elements.

3.4.2 API shall indemnify and hold harmless BellSouth from any and all claims, actions, causes of action, of whatever kind or nature arising out of the presence of API's Guests in the Collocation Space except to the extent caused by BellSouth's sole negligence, gross negligence, or willful misconduct.

3.5 Adjacent Collocation. BellSouth will permit adjacent collocation arrangements ("Adjacent Arrangement") on the Premises' property where physical collocation space within the Premises is legitimately exhausted, subject to technical feasibility, where the Adjacent Arrangement does not interfere with access to existing or planned structures or facilities on the Premises property and where permitted by zoning and other applicable state and local regulations. The Adjacent Arrangement shall be constructed or procured by API and in conformance with BellSouth's design and construction specifications. Further, API shall construct, procure, maintain and operate said Adjacent Arrangement(s) pursuant to all of the terms and conditions set forth in this Attachment. Rates shall be negotiated at the time of the request for the Adjacent Arrangement.

3.5.1 Should API elect such option, API must arrange with a BellSouth Certified Contractor to construct an Adjacent Arrangement structure in accordance with BellSouth's guidelines and specifications. BellSouth will provide guidelines and specifications upon request. Where local building codes require enclosure specifications more stringent than BellSouth's standard specification, API and API's BellSouth Certified Contractor must comply with the more stringent local building code requirements. API's BellSouth Certified Contractor shall be responsible for filing and receiving any and all necessary zoning, permits and/or licenses for such construction. API's BellSouth Certified Contractor shall bill API directly for all work performed for API pursuant to this Attachment and BellSouth shall have no liability for nor responsibility to pay such charges imposed by the BellSouth Certified Contractor. API must provide the local BellSouth building contact with two cards, keys or other access device used to enter the locked enclosure. Except in cases of emergency, BellSouth shall not access API's locked enclosure prior to notifying API.

3.5.2 API must submit its plans and specifications to BellSouth with its Firm Order. BellSouth may elect to review API's plans and specifications prior to construction of an Adjacent Arrangement(s) to ensure compliance with BellSouth's guidelines and specifications. BellSouth shall complete its review within fifteen (15) calendar days. If BellSouth reviews API's plans and specifications prior to construction, then BellSouth will have the right to inspect the Adjacent Arrangement after construction to make sure it is constructed according to the submitted plans and specifications. If BellSouth elects not to review API's plans and specifications prior to construction, API will be entitled to request BellSouth to review; and in the event API does not request a BellSouth review, BellSouth shall have the right to inspect the Adjacent Arrangement after construction to make sure it is constructed according to BellSouth's guidelines and specifications. BellSouth may require API to remove or correct within seven (7) calendar days at API's expense any structure that does not

meet these plans and specifications or, where applicable, BellSouth's guidelines and specifications

3.5.3 API shall provide a concrete pad, the structure housing the arrangement, heating/ventilation/air conditioning ("HVAC"), lighting, and all facilities that connect the structure (i.e. racking, conduits, etc.) to the BellSouth point of demarcation. At API's option, and where the local authority having jurisdiction permits, BellSouth shall provide an AC power source and access to physical collocation services and facilities subject to the same nondiscriminatory requirements as applicable to any other physical collocation arrangement. API's BellSouth Certified Contractor shall be responsible for filing and receiving any and all necessary zoning, permits and/or licenses for such arrangement.

3.5.4 BellSouth shall allow Shared (Subleased) Caged Collocation within an Adjacent Arrangement pursuant to the terms and conditions set forth in Section 3.4 preceding.

4. Occupancy

4.1 Commencement Date. The "Commencement Date" shall be the day API's equipment becomes operational as described in Article 4.2, following.

4.2 Occupancy. BellSouth will notify API in writing that the Collocation Space is ready for occupancy. API must notify BellSouth in writing that collocation equipment installation is complete and is operational with BellSouth's network. BellSouth may, at its option, not accept orders for interconnected service until receipt of such notice. For purposes of this paragraph, API's telecommunications equipment will be deemed operational when cross-connected to BellSouth's network for the purpose of service provision.

4.3 Termination of Occupancy. In addition to any other provisions addressing Termination of Occupancy in this Attachment, Termination of Occupancy may occur in the following circumstances:

4.3.1 API may terminate occupancy in a particular Collocation Space by submitting a Subsequent Application requesting termination of occupancy.

4.3.2 Upon termination of such occupancy, API at its expense shall remove its equipment and other property from the Collocation Space. API shall have thirty (30) calendar days from the termination date to complete such removal, including the removal of all equipment and facilities of API's Guests, unless CLEC's guest has assumed responsibility for the collocation space housing the guest equipment and executed the documentation required by BellSouth prior to such removal date. API shall continue payment of monthly fees to BellSouth until such date as API has fully vacated the Collocation Space. Should API or API's Guest fail to vacate the Collocation Space within thirty (30) calendar days from the termination date, BellSouth shall have the right to remove the equipment and other property of API or API's Guest at API's

expense and with no liability for damage or injury to API or API's Guest's property unless caused by the gross negligence or intentional misconduct of BellSouth. Upon termination of API's right to occupy Collocation Space, API shall surrender such Collocation Space to BellSouth in the same condition as when first occupied by API except for ordinary wear and tear, unless otherwise agreed to by the Parties. API shall be responsible for the cost of removing any enclosure, together with all support structures (e.g., racking, conduits), at the termination of occupancy and restoring the grounds to their original condition.

5. Use of Collocation Space

5.1 Equipment Type. BellSouth permits the collocation of any type of equipment necessary for interconnection to BellSouth's network or for access to unbundled network elements in the provision of telecommunications services.

5.1.1 Such equipment must at a minimum meet the following BellCore (Telcordia) Network Equipment Building Systems (NEBS) General Equipment Requirements: Criteria Level 1 requirements as outlined in the BellCore (Telcordia) Special Report SR-3580, Issue 1; equipment design spatial requirements per GR-63-CORE, Section 2; thermal heat dissipation per GR-063-CORE, Section 4, Criteria 77-79; acoustic noise per GR-063-CORE, Section 4, Criterion 128, and National Electric Code standards. Except where otherwise required by a Commission, BellSouth shall comply with the applicable FCC rules relating to denial of collocation based on API's failure to comply with this section.

5.1.2 API shall not request more DS0, DS1, DS3 and optical terminations for a collocation arrangement than the total port or termination capacity of the transmission equipment physically installed in the arrangement. The total capacity of the transmission equipment collocated in the arrangement will include equipment contained in the application in question as well as equipment already placed in the arrangement. Collocated cross-connect devices are not considered transmission equipment. If full network termination capacity of the transmission equipment being installed is not requested in the application, additional network terminations for the installed equipment will require the submission of another application. In the event that API submits an application for terminations that exceed the total capacity of the collocated equipment, API will be informed of the discrepancy and will be required to submit a revision to the application.

5.1.3 API shall not use the Collocation Space for marketing purposes nor shall it place any identifying signs or markings in the area surrounding the Collocation Space or on the grounds of the Premises.

5.1.4 API shall place a plaque or other identification affixed to API's equipment necessary to identify API's equipment, including a list of emergency contacts with telephone numbers.

5.2 Entrance Facilities. API may elect to place API-owned or API-leased fiber entrance facilities into the Collocation Space. BellSouth will designate the point of interconnection in close proximity to the Premises building housing the Collocation Space, such as an entrance manhole or a cable vault which are physically accessible by both Parties. API will provide and place fiber cable at the point of entrance of sufficient length to be pulled through conduit and into the splice location. API will provide and install a sufficient length of fire retardant riser cable, to which the entrance cable will be spliced, which will extend from the splice location to API's equipment in the Collocation Space. In the event API utilizes a non-metallic, riser-type entrance facility, a splice will not be required. API must contact BellSouth for instructions prior to placing the entrance facility cable in the manhole. API is responsible for maintenance of the entrance facilities. At API's option BellSouth will accommodate where technically feasible a microwave entrance facility pursuant to separately negotiated terms and conditions. In the case of adjacent collocation, unless BellSouth determines that limited space is available for the entrance facilities, copper facilities may be used between the adjacent collocation arrangement and the central office termination point.

5.2.1 Dual Entrance. BellSouth will provide at least two interconnection points at each Premises where there are at least two such interconnection points available and where capacity exists. Upon receipt of a request for physical collocation under this Attachment, BellSouth shall provide API with information regarding BellSouth's capacity to accommodate dual entrance facilities. If conduit in the serving manhole(s) is available and is not reserved for another purpose for utilization within 12 months of the receipt of an application for collocation, BellSouth will make the requested conduit space available for installing a second entrance facility to API's arrangement. The location of the serving manhole(s) will be determined at the sole discretion of BellSouth. Where dual entrance is not available due to lack of capacity, BellSouth will so state in the Application Response.

5.2.2 Shared Use. API may utilize spare capacity on an existing interconnector entrance facility for the purpose of providing an entrance facility to another API collocation arrangement within the same BellSouth Premises. API must arrange with BellSouth for BellSouth to splice the utilized entrance facility capacity to API-provided riser cable.

5.3 Demarcation Point. BellSouth will designate the point(s) of demarcation between API's equipment and/or network and BellSouth's network. Each Party will be responsible for maintenance and operation of all equipment/facilities on its side of the demarcation point. For 2-wire and 4-wire connections to BellSouth's network, the demarcation point shall be a common block on the BellSouth designated conventional distributing frame. API shall be responsible for providing, and a supplier certified by BellSouth ("API's BellSouth Certified Supplier") shall be responsible for installing and properly labeling/stenciling, the common block, and necessary cabling pursuant to Section 6.5. For all other terminations BellSouth shall designate a demarcation point on a per arrangement basis. API or its agent must perform all required

maintenance to equipment/facilities on its side of the demarcation point, pursuant to Section 5.4, following, and may self-provision cross-connects that may be required within the Collocation Space to activate service requests. At API's option and expense, a Point of Termination ("POT") bay or frame may be placed in the Collocation Space, but will not serve as the demarcation point. API must make arrangements with a BellSouth Certified Supplier for such placement.

5.4 API's Equipment and Facilities. API, or if required by this Attachment, API's BellSouth Certified Supplier, is solely responsible for the design, engineering, installation, testing, provisioning, performance, monitoring, maintenance and repair of the equipment and facilities used by API which must be performed in compliance with all applicable BellSouth policies and guidelines. Such equipment and facilities may include but are not limited to cable(s); equipment; and point of termination connections. API and its selected BellSouth Certified Supplier must follow and comply with all BellSouth requirements outlined in BellSouth's TR 73503, TR 73519, TR 73572, and TR 73564.

5.5 BellSouth's Access to Collocation Space. From time to time BellSouth may require access to the Collocation Space. BellSouth retains the right to access such space for the purpose of making BellSouth equipment and building modifications (e.g., running, altering or removing racking, ducts, electrical wiring, HVAC, and cables). BellSouth will give notice to API at least 48 hours before access to the Collocation Space is required. API may elect to be present whenever BellSouth performs work in the Collocation Space. The Parties agree that API will not bear any of the expense associated with this work.

5.6 Access. Pursuant to Section 11, API shall have access to the Collocation Space twenty-four (24) hours a day, seven (7) days a week. API agrees to provide the name and social security number or date of birth or driver's license number of each employee, contractor, or agents of API or API's Guests provided with access keys or devices ("Access Keys") prior to the issuance of said Access Keys. Key acknowledgement forms must be signed by API and returned to BellSouth Access Management within 15 calendar days of API's receipt. Failure to return properly acknowledged forms will result in the holding of subsequent requests until acknowledgements are current. Access Keys shall not be duplicated under any circumstances. API agrees to be responsible for all Access Keys and for the return of all said Access Keys in the possession of API employees, contractors, Guests, or agents after termination of the employment relationship, contractual obligation with API or upon the termination of this Attachment or the termination of occupancy of an individual collocation arrangement.

5.6.1 Lost or Stolen Access Keys. API shall notify BellSouth in writing within 24 hours of becoming aware in the case of lost or stolen Access Keys. Should it become necessary for BellSouth to re-key buildings or deactivate a card as a result of a lost Access Key(s) or for failure to return an Access Key(s), API shall pay for all reasonable costs associated with the re-keying or deactivating the card.

5.7 Interference or Impairment. Notwithstanding any other provisions of this Attachment, API shall not use any product or service provided under this Agreement, any other service related thereto or used in combination therewith, or place or use any equipment or facilities in any manner that 1) significantly degrades, interferes with or impairs service provided by BellSouth or by any other entity or any person's use of its telecommunications service; 2) endangers or damages the equipment, facilities or other property of BellSouth or of any other entity or person; 3) compromises the privacy of any communications; or 4) creates an unreasonable risk of injury or death to any individual or to the public. If BellSouth reasonably determines that any equipment or facilities of API violates the provisions of this paragraph, BellSouth shall give written notice to API, which notice shall direct API to cure the violation within forty-eight (48) hours of API's actual receipt of written notice or, at a minimum, to commence curative measures within 24 hours and to exercise reasonable diligence to complete such measures as soon as possible thereafter. After receipt of the notice, the Parties agree to consult immediately and, if necessary, to inspect the arrangement.

5.7.1 Except in the case of the deployment of an advanced service which significantly degrades the performance of other advanced services or traditional voice band services, if API fails to take curative action within 48 hours or if the violation is of a character which poses an immediate and substantial threat of damage to property, injury or death to any person, or any other significant degradation, interference or impairment of BellSouth's or another entity's service, then and only in that event BellSouth may take such action as it deems appropriate to correct the violation, including without limitation the interruption of electrical power to API's equipment. BellSouth will endeavor, but is not required, to provide notice to API prior to taking such action and shall have no liability to API for any damages arising from such action, except to the extent that such action by BellSouth constitutes willful misconduct.

5.7.2 For purposes of this Section 5.7, the term significantly degrade shall mean an action that noticeably impairs a service from a user's perspective. In the case of the deployment of an advanced service which significantly degrades the performance of other advanced services or traditional voice band services and API fails to take curative action within 48 hours then BellSouth will establish before the relevant Commission that the technology deployment is causing the significant degradation. Any claims of network harm presented to API or, if subsequently necessary, the relevant Commission, must be supported with specific and verifiable information. Where BellSouth demonstrates that a deployed technology is significantly degrading the performance of other advanced services or traditional voice band services, API shall discontinue deployment of that technology and migrate its customers to technologies that will not significantly degrade the performance of other such services. Where the only degraded service itself is a known disturber, and the newly deployed technology satisfies at least one of the criteria for a presumption that is acceptable for deployment under section 47 C.F.R. 51.230, the degraded service shall not prevail against the newly-deployed technology.

5.8 Personalty and its Removal. Facilities and equipment placed by API in the Collocation Space shall not become a part of the Collocation Space, even if nailed, screwed or otherwise fastened to the Collocation Space, but shall retain their status as personal property and may be removed by API at any time. Any damage caused to the Collocation Space by API's employees, agents or representatives during the removal of such property shall be promptly repaired by API at its expense.

5.9 Alterations. In no case shall API or any person acting on behalf of API make any rearrangement, modification, improvement, addition, repair, or other alteration which could affect in any way space, power, HVAC, and/or safety considerations to the Collocation Space or the BellSouth Premises without the written consent of BellSouth, which consent shall not be unreasonably withheld. The cost of any such specialized alterations shall be paid by API. Any material rearrangement, modification, improvement, addition, repair, or other alteration shall require a Subsequent Application and Subsequent Application Fee, pursuant to sub-section 6.2.2.

5.10 Janitorial Service. API shall be responsible for the general upkeep of the Collocation Space. API shall arrange directly with a BellSouth Certified Contractor for janitorial services applicable to Caged Collocation Space. BellSouth shall provide a list of such contractors on a site-specific basis upon request.

6. Ordering and Preparation of Collocation Space

6.1 Should any state or federal regulatory agency impose procedures or intervals applicable to API that are different from procedures or intervals set forth in this section, whether now in effect or that become effective after execution of this Agreement, those procedures or intervals shall supersede the requirements set forth herein for that jurisdiction for all applications submitted for the first time after the effective date thereof.

6.2 Application for Space. API shall submit an application document when API or API's Guest(s), as defined in Section 3.4, desires to request or modify the use of the Collocation Space.

6.2.1 Initial Application. For API or API's Guest(s) initial equipment placement, API shall submit to BellSouth a Physical Expanded Interconnection Application Document ("Application"). The Application is Bona Fide when it is complete and accurate, meaning that all required fields on the application are completed with the appropriate type of information. The Bona Fide Application shall contain a detailed description and schematic drawing of the equipment to be placed in API's Collocation Space(s) and an estimate of the amount of square footage required.

6.2.2 Subsequent Application. In the event API or API's Guest(s) desires to modify the use of the Collocation Space ("Augmentation"), API shall complete an Application

detailing all information regarding the modification to the Collocation Space ("Subsequent Application"). The minimum Subsequent Application Fee shall be considered a partial payment of the applicable Subsequent Application Fee which shall be calculated as set forth below. BellSouth shall determine what modifications, if any, to the Premises are required to accommodate the change requested by API in the Application. Such necessary modifications to the Premises may include but are not limited to, floor loading changes, changes necessary to meet HVAC requirements, changes to power plant requirements, equipment additions, etc. The fee paid by API for its request to modify the use of the Collocation Space shall be dependent upon the level of assessment needed for the modification requested. Where the Subsequent Application does not require assessment for provisioning or construction work by BellSouth, no Subsequent Application Fee will be required and the pre-paid fee shall be refunded to API. The fee for an Application where the modification requested has limited effect (e.g., does not require assessment related to capital expenditure by BellSouth) shall be the Subsequent Application Fee as set forth in Exhibit A. If the modification requires capital expenditure assessment, a full Application Fee shall apply. In the event such modifications require the assessment of a full Application Fee as set forth in Exhibit A, the outstanding balance shall be due by API within 30 calendar days following API's receipt of a bill or invoice from BellSouth. The Subsequent Application is Bona Fide when it is complete and accurate, meaning that all required fields on the Application are completed with the appropriate type of information.

6.3 Application Response. In Alabama, North Carolina, and Tennessee, in addition to the notice of space availability pursuant to Section 2.1, BellSouth will respond as to whether the Application is Bona Fide, and if it is not Bona Fide, the items necessary to cause the Application to become Bona Fide. Sufficient detail will be provided to permit API a reasonable opportunity to correct each deficiency. API must correct any deficiencies in its Application and resubmit a Bona Fide Application within ten (10) calendar days of being notified of the deficiencies in the original Application. If API fails to resubmit its Application as Bona Fide within this ten (10) day period, API will lose its place in the collocation queue. When space has been determined to be available, BellSouth will provide a written response ("Application Response"), which will include, at a minimum, the configuration of the space, the Cable Installation Fee, Cable Records Fee, and the space preparation fees, as described in Section 7.

6.3.1 Application Response. Except as otherwise provided, for all States that have ordered provisioning intervals but not application response intervals, the following will apply. In addition to the notice of space availability pursuant to Section 2.1, BellSouth will respond as to whether the Application is Bona Fide, and if it is not Bona Fide, the items necessary to cause the Application to become Bona Fide. When space has been determined to be available, BellSouth will provide a written response ("Application Response") within thirty (30) calendar days of receipt of a Bona Fide Application. The Application Response will include, at a minimum, the configuration of the space, the Cable Installation Fee, Cable Records Fee, and the space preparation fees, as described in Section 7. When multiple applications are submitted in a state within a

fifteen (15) calendar day window, BellSouth will respond to the Bona Fide Applications as soon as possible, but no later than the following: within thirty (30) calendar days for Bona Fide Applications 1-5; within thirty-six (36) calendar days for Bona Fide Applications 6-10; within forty-two (42) calendar days for Bona Fide Applications 11-15. Response intervals for multiple Bona Fide Applications submitted within the same timeframe for the same state in excess of 15 must be negotiated. All negotiations shall consider the total volume from all requests from telecommunications companies for collocation.

6.3.2 Application Response (Florida). Within fifteen (15) calendar days of receipt of a Bona Fide Application, BellSouth will respond as to whether space is available or not available within a particular Premises. Additionally, when space has been determined to be available or when a lesser amount of space than that requested is available, then with respect to the space available, BellSouth will provide a written response ("Application Response") including sufficient information to enable API to place a Firm Order. The Application Response will include, at a minimum, the configuration of the space, the Cable Installation Fee, Cable Records Fee, and the space preparation fees, as described in Section 7. When API submits ten (10) or more Applications within ten (10) calendar days, the initial fifteen (15) day response period will increase by ten (10) days for every additional ten (10) Applications or fraction thereof.

6.3.3 Application Response (Georgia) In addition to the notice of space availability pursuant to Section 2.1, BellSouth will respond as to whether the Application is Bona Fide, and if it is not Bona Fide, the items necessary to cause the Application to become Bona Fide. When space has been determined to be available for caged or cageless arrangements, BellSouth will provide a written response ("Application Response") within thirty (30) calendar days of receipt of a Bona Fide Application. The Application Response will include, at a minimum, the configuration of the space, the Cable Installation Fee, Cable Records Fee, and the space preparation fees, as described in Section 7.

6.3.4 Application Response (Kentucky) In addition to the notice of space availability pursuant to Section 2.1, BellSouth will respond as to whether the Application is Bona Fide, and if it is not Bona Fide, the items necessary to cause the Application to become Bona Fide. When space has been determined to be available, BellSouth will provide a written response ("Application Response") within thirty (30) calendar days of receipt of a Bona Fide Application. The Application Response will include, at a minimum, the configuration of the space, the Cable Installation Fee, Cable Records Fee, and the space preparation fees, as described in Section 7. When multiple applications are submitted in a state within a fifteen (15) calendar day window, BellSouth will respond to the Bona Fide Applications as soon as possible, but no later than the following: within thirty (30) calendar days for Bona Fide Applications 1-5; within thirty-six (36) calendar days for Bona Fide Applications 6-10; within forty-two (42) calendar days for Bona Fide Applications 11-15. Response intervals for multiple Bona Fide Applications submitted within the same timeframe for the same state in

excess of 15 must be negotiated. All negotiations shall consider the total volume from all requests from telecommunications companies for collocation.

6.3.5 Application Response (Louisiana). In addition to the notice of space availability pursuant to Section 2.1, BellSouth will respond as to whether the Application is Bona Fide, and if it is not Bona Fide, the items necessary to cause the Application to become Bona Fide. BellSouth will respond as to whether space is available or not available within a particular Premises in accordance with Section 2. The Application Response will include, at a minimum, the configuration of the space, the Cable Installation Fee, Cable Records Fee, and the space preparation fees, as described in Section 7. BellSouth will respond with a full Application Response within 30 calendar days for one to ten Applications; 35 calendar days for eleven to twenty Applications; and for requests of more than twenty Application it is increased by five calendar days for every five Applications received within five business days.

6.3.6 Application Response (Mississippi). In addition to the notice of space availability pursuant to Section 2. BellSouth will respond as to whether the Application is Bona Fide, and if it is not Bona Fide, the items necessary to cause the Application to become Bona Fide. When space has been determined to be available, BellSouth will provide a written response ("Application Response") within thirty (30) business days of receipt of a Bona Fide Application. The Application Response will include, at a minimum, the configuration of the space, the Cable Installation Fee, Cable Records Fee, and the space preparation fees, as described in Section 7. When multiple applications are submitted in a state within a fifteen (15) business day window, BellSouth will respond to the Bona Fide Applications as soon as possible, but no later than the following: within thirty (30) business days for Bona Fide Applications 1-5; within thirty-six (36) business days for Bona Fide Applications 6-10; within forty-two (42) business days for Bona Fide Applications 11-15. Response intervals for multiple Bona Fide Applications submitted within the same timeframe for the same state in excess of 15 must be negotiated. All negotiations shall consider the total volume from all requests from telecommunications companies for collocation.

6.4 Application Modifications. In Alabama, North Carolina, and Tennessee, if a modification or revision is made to any information in the Bona Fide Application for Physical Collocation or the Bona Fide Application for Adjacent Collocation, with the exception of modifications to Customer Information, Contact Information or Billing Contact Information, either at the request of API or necessitated by technical considerations, said Application shall be considered a new Application and shall be handled as a new Application for purposes of the provisioning interval and BellSouth shall charge API a Subsequent Application Fee. Major changes such as requesting additional space or adding equipment may require API to submit the Application with an Application Fee.

6.4.1 Application Modifications. For all States that have ordered provisioning intervals but not application response intervals, and except as otherwise specified, the following will apply: If a modification or revision is made to any information in the Bona Fide

Application for Physical Collocation or the Bona Fide Application for Adjacent Collocation, with the exception of modifications to Customer Information, Contact Information or Billing Contact Information, either at the request of API or necessitated by technical considerations, BellSouth will respond to the Bona Fide Application within thirty (30) calendar days after BellSouth receives such revised application or at such other date as the Parties agree. If, at any time, BellSouth needs to reevaluate API's Bona Fide Application as a result of changes requested by API to API's original application, then BellSouth will charge API a Subsequent Application Fee. Major changes such as requesting additional space or adding additional equipment may require API to resubmit the Application with an Application Fee.

6.4.2 Application Modifications (Florida). If a modification or revision is made to any information in the Bona Fide Application for Physical Collocation or the Bona Fide Application for Adjacent Collocation, with the exception of modifications to Customer Information, Contact Information or Billing Contact Information, either at the request of API or necessitated by technical considerations, BellSouth will respond to the Bona Fide Application within fifteen (15) calendar days after BellSouth receives such revised Application or at such other date as the Parties agree. If, at any time, BellSouth needs to reevaluate API's Bona Fide Application as a result of changes requested by API to API's original Application, then BellSouth will charge API a Subsequent Application Fee. Major changes such as requesting additional space or adding additional equipment may require API to resubmit the Application with an Application Fee.

6.4.3 Application Modifications (Kentucky & Georgia). If a modification or revision is made to any information in the Bona Fide Application for Physical Collocation or the Bona Fide Application for Adjacent Collocation, with the exception of modifications to Customer Information, Contact Information or Billing Contact Information, either at the request of API or necessitated by technical considerations, BellSouth will respond to the Bona Fide Application within thirty (30) calendar days after BellSouth receives such revised Application or at such other date as the Parties agree. If, at any time, BellSouth needs to reevaluate API's Bona Fide Application as a result of changes requested by API to CLEC's original Application, then BellSouth will charge API a Subsequent Application Fee. Major changes such as requesting additional space or adding additional equipment may require API to resubmit the Application with an Application Fee.

6.4.4 Application Modifications (Mississippi). If a modification or revision is made to any information in the Bona Fide Application for Physical Collocation or the Bona Fide Application for Adjacent Collocation, with the exception of modifications to Customer Information, Contact Information or Billing Contact Information, either at the request of API or necessitated by technical considerations, BellSouth will respond to the Bona Fide Application within thirty (30) business days after BellSouth receives such revised Application or at such other date as the Parties agree. If, at any time, BellSouth needs to reevaluate API's Bona Fide Application as a result of changes requested by API to CLEC's original Application, then BellSouth will charge API a

Subsequent Application Fee. Major changes such as requesting additional space or adding additional equipment may require API to resubmit the Application with an Application Fee.

6.4.5 Application Modifications (Louisiana). If a modification or revision is made to any information in the Bona Fide Application for Physical Collocation or the Bona Fide Application for Adjacent Collocation, with the exception of modifications to Customer Information, Contact Information or Billing Contact Information, either at the request of API or necessitated by technical considerations, BellSouth will respond to the Bona Fide Application within thirty (30) calendar days after BellSouth receives such revised application or at such other date as the Parties agree. BellSouth will respond to such modifications or revisions within 30 calendar days for one to ten revised Applications; 35 calendar days for eleven to twenty revised Applications; and for requests of more than twenty revised Applications it is increased by five calendar days for every five revised Applications received within five business days. If, at any time, BellSouth needs to reevaluate API's Bona Fide Application as a result of changes requested by API to CLEC's original application, then BellSouth will charge API a Subsequent Application Fee. Major changes such as requesting additional space or adding additional equipment may require API to resubmit the application with an Application Fee.

6.5 Bona Fide Firm Order. In Alabama, North Carolina, and Tennessee, API shall indicate its intent to proceed with equipment installation in a BellSouth Premises by submitting a Physical Expanded Interconnection Firm Order document ("Firm Order") to BellSouth. A Firm Order shall be considered Bona Fide when API has completed the Application/Inquiry process described in Section 6.2, preceding, and has submitted the Firm Order document indicating acceptance of the Application Response provided by BellSouth. The Bona Fide Firm Order must be received by BellSouth no later than seven (7) calendar days after BellSouth's Application Response to API's Bona Fide Application, unless BellSouth provides an Application Response on or before the ten-day response interval set forth in section 2.1, in which case API must submit its Bona Fide Firm Order to BellSouth within seventeen (17) calendar days of BellSouth's receipt of the Bona Fide Application. If API fails to submit its Bona Fide Firm Order to BellSouth within the time frames set forth above, the provisioning intervals set forth in section 6.6 shall apply from the date of receipt of the Bona Fide Firm Order and not from the date of the Bona Fide Application. If API fails to submit a Bona Fide Firm Order within fifteen (15) days of receipt of An Application Response, the Application will expire.

6.5.1 Bona Fide Firm Order. Except as otherwise provided, in all States that have ordered provisioning intervals but not addressed Firm Order intervals, the following shall apply. API shall indicate its intent to proceed with equipment installation in a BellSouth Premises by submitting a Physical Expanded Interconnection Firm Order document ("Firm Order") to BellSouth. A Firm Order shall be considered Bona Fide when API has completed the Application/Inquiry process described in Section 6.2, preceding and has submitted the Firm Order document indicating acceptance of the

Application Response provided by BellSouth. The Bona Fide Firm Order must be received by BellSouth no later than thirty (30) calendar days after BellSouth's Application Response to API's Bona Fide Application or the Application will expire.

6.5.2 Bona Fide Firm Order (Kentucky & Mississippi). API shall indicate its intent to proceed with equipment installation in a BellSouth Premises by submitting a Physical Expanded Interconnection Firm Order document ("Firm Order") to BellSouth. A Firm Order shall be considered Bona Fide when API has completed the Application/Inquiry process described in Section 6.2, preceding and has submitted the Firm Order document indicating acceptance of the Application Response provided by BellSouth. The Bona Fide Firm Order must be received by BellSouth no later than thirty (30) calendar days (in Mississippi 30 business days) after BellSouth's Application Response to API's Bona Fide Application or the Application will expire.

6.5.3 BellSouth will establish a firm order date based upon the date BellSouth is in receipt of a Bona Fide Firm Order. BellSouth will acknowledge the receipt of API's Bona Fide Firm Order within seven (7) calendar days of receipt indicating that the Bona Fide Firm Order has been received. A BellSouth response to a Bona Fide Firm Order will include a Firm Order Confirmation containing the firm order date. No revisions will be made to a Bona Fide Firm Order.

6.5.4 BellSouth will permit one accompanied site visit to API's designated collocation arrangement location after receipt of the Bona Fide Firm Order without charge to API.

6.5.5 API must submit to BellSouth the completed Access Control Request Form for all employees or agents requiring access to the BellSouth Premises a minimum of 30 calendar days prior to the date API desires access to the Collocation Space. API may submit such a request at any time subsequent to BellSouth's receipt of the Bona Fide Firm Order. In the event API desires access to the Collocation Space after submitting such a request but prior to access being approved, BellSouth shall permit API to access the Collocation Space, accompanied by a security escort at API's expense. API must request escorted access at least three (3) business days prior to the date such access is desired.

6.6

6.6.1 Construction and Provisioning Interval. In Alabama, North Carolina, and Tennessee, BellSouth will complete construction for collocation arrangements within a maximum of 90 calendar days from receipt of an Application or as agreed to by the Parties. Under extraordinary conditions, BellSouth may elect to renegotiate an alternative provisioning interval with API or seek a waiver from this interval from the Commission. Examples of extraordinary conditions include, but are not limited to, extended license or permitting intervals; major BellSouth equipment rearrangement or addition; power plant addition or upgrade; major mechanical addition or upgrade; major upgrade for ADA compliance; environmental hazard or hazardous materials

abatement; and arrangements for which equipment shipping intervals are extraordinary in length.

6.6.2 Construction and Provisioning Interval (Florida). BellSouth will complete construction for collocation arrangements as soon as possible and within a maximum of 90 calendar days from receipt of a Bona Fide Firm Order or as agreed to by the Parties. For changes to collocation space after initial space completion, BellSouth will complete construction for collocation arrangements as soon as possible and within a maximum of 45 calendar days from receipt of a Bona Fide Firm Order or as agreed to by the Parties. If BellSouth does not believe that construction will be completed within the relevant time frame and BellSouth and API cannot agree upon a completion date, within 45 calendar days of receipt of the Bona Fide Firm Order for an initial request, and within 30 calendar days for Augmentations, BellSouth may seek an extension from the Florida PSC.

6.6.3 Construction and Provisioning Interval (Georgia). BellSouth will use best efforts to complete construction for caged collocation arrangements under ordinary conditions as soon as possible and within a maximum of 90 calendar days from receipt of a Bona Fide Firm Order or as agreed to by the Parties. BellSouth will use best efforts to complete construction for cageless collocation arrangements under ordinary conditions as soon as possible and within a maximum of 60 calendar days from receipt of a Bona Fide Firm Order and 90 calendar days for extraordinary conditions or as agreed to by the Parties. Ordinary conditions are defined as space available with only minor changes to support systems required, such as but not limited to, HVAC, cabling and the power plant(s). Extraordinary conditions are defined to include but are not limited to major BellSouth equipment rearrangement or addition; power plant addition or upgrade; major mechanical addition or upgrade; major upgrade for ADA compliance; environmental hazard or hazardous materials abatement; and arrangements for which equipment shipping intervals are extraordinary in length. BellSouth may elect to renegotiate an alternative provisioning interval with API or seek a waiver from this interval from the Commission.

6.6.4 Construction and Provisioning Interval (Louisiana). BellSouth will complete construction for collocation arrangements under ordinary conditions as soon as possible and within a maximum of 120 calendar days from receipt of a Bona Fide Firm Order for an initial request, and within 60 calendar days for an Augmentation, or as agreed to by the Parties. Ordinary conditions are defined as space available with only minor changes to support systems required, such as but not limited to, HVAC, cabling and the power plant(s). BellSouth will complete construction of all other Collocation Space ("extraordinary conditions") within 180 calendar days of the receipt of a Bona Fide Firm Order. Examples of extraordinary conditions include but are not limited to, extended license or permitting intervals; major BellSouth equipment rearrangement or addition; power plant addition or upgrade; major mechanical addition or upgrade; major upgrade for ADA compliance; environmental

hazard or hazardous materials abatement; and arrangements for which equipment shipping intervals are extraordinary in length. BellSouth may elect to renegotiate an alternative provisioning interval with API or seek a waiver from this interval from the Commission.

6.6.5 Construction and Provisioning Interval (Mississippi). Excluding the time interval required to secure the appropriate government licenses and permits, BellSouth will complete construction for collocation arrangements under ordinary conditions as soon as possible and within a maximum of 120 calendar days from receipt of a Bona Fide Firm Order or as agreed to by the Parties. Ordinary conditions are defined as space available with only minor changes to support systems required, such as but not limited to, HVAC, cabling and the power plant(s). Excluding the time interval required to secure the appropriate government licenses and permits, BellSouth will complete construction of all other Collocation Space ("extraordinary conditions") within 180 calendar days of the receipt of a Bona Fide Firm Order. Examples of extraordinary conditions include but are not limited to, extended license or permitting intervals; major BellSouth equipment rearrangement or addition; power plant addition or upgrade; major mechanical addition or upgrade; major upgrade for ADA compliance; environmental hazard or hazardous materials abatement; and arrangements for which equipment shipping intervals are extraordinary in length. BellSouth may elect to renegotiate an alternative provisioning interval with API or seek a waiver from this interval from the Commission.

6.6.6 Construction and Provisioning Interval (Kentucky). Excluding the time interval required to secure the appropriate government licenses and permits, BellSouth will use best efforts to complete construction for collocation arrangements under ordinary conditions as soon as possible and within a maximum of 90 calendar days from receipt of a Bona Fide Firm Order or as agreed to by the Parties. Ordinary conditions are defined as space available with only minor changes to support systems required, such as but not limited to, HVAC, cabling and the power plant(s). Excluding the time interval required to secure the appropriate government licenses and permits, BellSouth will use best efforts to complete construction of all other Collocation Space ("extraordinary conditions") within 130 calendar days of the receipt of a Bona Fide Firm Order. Extraordinary conditions are defined to include but are not limited to major BellSouth equipment rearrangement or addition; power plant addition or upgrade; major mechanical addition or upgrade; major upgrade for ADA compliance; environmental hazard or hazardous materials abatement; and arrangements for which equipment shipping intervals are extraordinary in length. BellSouth may elect to renegotiate an alternative provisioning interval with API or seek a waiver from this interval from the Commission.

6.6.7 Construction and Provisioning Interval (South Carolina). BellSouth will complete the construction and provisioning activities for cageless and caged collocation arrangements as soon as possible, but no later than 90 calendar days from receipt of a bona fide firm order. BellSouth may elect to renegotiate an alternative provisioning interval with API or seek a waiver from this interval from the Commission.

6.7 Joint Planning. Joint planning between BellSouth and API will commence within a maximum of twenty (20) calendar days from BellSouth's receipt of a Bona Fide Firm Order. BellSouth will provide the preliminary design of the Collocation Space and the equipment configuration requirements as reflected in the Bona Fide Application and affirmed in the Bona Fide Firm Order. The Collocation Space completion time period will be provided to API during joint planning.

6.8 Permits. Each Party or its agents will diligently pursue filing for the permits required for the scope of work to be performed by that Party or its agents within ten (10) calendar days of the completion of finalized construction designs and specifications.

6.9 Acceptance Walk Through. API will contact BellSouth within seven (7) days of collocation space being ready to schedule an acceptance walk through of each Collocation Space requested from BellSouth by API. BellSouth will correct any deviations to API's original or jointly amended requirements within seven (7) calendar days after the walk through, unless the Parties jointly agree upon a different time frame.

6.10 Use of BellSouth Certified Supplier. API shall select a supplier which has been approved as a BellSouth Certified Supplier to perform all engineering and installation work. API and API's BellSouth Certified Supplier must follow and comply with all BellSouth requirements outlined in BellSouth's TR 73503, TR 73519, TR 73572, and TR 73564. In some cases, API must select separate BellSouth Certified Suppliers for transmission equipment, switching equipment and power equipment. BellSouth shall provide API with a list of BellSouth Certified Suppliers upon request. The BellSouth Certified Supplier(s) shall be responsible for installing API's equipment and components, extending power cabling to the BellSouth power distribution frame, performing operational tests after installation is complete, and notifying BellSouth's equipment engineers and API upon successful completion of installation, etc. The BellSouth Certified Supplier shall bill API directly for all work performed for API pursuant to this Attachment and BellSouth shall have no liability for nor responsibility to pay such charges imposed by the BellSouth Certified Supplier. BellSouth shall consider certifying API or any supplier proposed by API. All work performed by or for API shall conform to generally accepted industry guidelines and standards.

6.11 Alarm and Monitoring. BellSouth shall place environmental alarms in the Premises for the protection of BellSouth equipment and facilities. API shall be responsible for placement, monitoring and removal of environmental and equipment alarms used to service API's Collocation Space. Upon request, BellSouth will provide API with applicable tariffed service(s) to facilitate remote monitoring of collocated equipment by API. Both Parties shall use best efforts to notify the other of any verified environmental hazard known to that Party.

6.12 Basic Telephone Service. Upon request of API, BellSouth will provide basic telephone service to the Collocation Space under the rates, terms and conditions of the current tariff offering for the service requested.

6.13 Virtual to Physical Collocation Relocation. In the event physical Collocation Space was previously denied at a location due to technical reasons or space limitations, and that physical Collocation Space has subsequently become available, API may relocate its virtual collocation arrangements to physical collocation arrangements and pay the appropriate non-recurring fees for physical collocation and for the rearrangement or reconfiguration of services terminated in the virtual collocation arrangement, as outlined in the appropriate BellSouth tariffs. In the event that BellSouth knows when additional space for physical collocation may become available at the location requested by API, such information will be provided to API in BellSouth's written denial of physical collocation. To the extent that (i) physical Collocation Space becomes available to API within 180 calendar days of BellSouth's written denial of API's request for physical collocation, (ii) BellSouth had knowledge that the space was going to become available, and (iii) API was not informed in the written denial that physical Collocation Space would become available within such 180 calendar days, then API may transition its virtual collocation arrangement to a physical collocation arrangement and will receive a credit for any nonrecurring charges previously paid for such virtual collocation. API must arrange with a BellSouth Certified Supplier for the relocation of equipment from its virtual Collocation Space to its physical Collocation Space and will bear the cost of such relocation.

6.14 Cancellation. If, at anytime prior to space acceptance, API cancels its order for the Collocation Space(s), API will reimburse BellSouth in the following manner: BellSouth will ascertain how far preparation work has progressed. API will be billed the applicable non recurring rate for any and all work processes for which work has begun.

6.15 Licenses. API, at its own expense, will be solely responsible for obtaining from governmental authorities, and any other appropriate agency, entity, or person, all rights, privileges, and licenses necessary or required to operate as a provider of telecommunications services to the public or to occupy the Collocation Space.

6.16 Environmental Compliance. The Parties agree to utilize and adhere to the Environmental Hazard Guidelines identified as Exhibit B attached hereto.

7. Rates and Charges

7.1 BellSouth shall assess an Application Fee via a service order which shall be issued at the time BellSouth responds that space is available pursuant to section 2.1. Payment of said Application Fee will be due as dictated by API's current billing cycle and is non-refundable.

7.2 Space Preparation. Space preparation fees consist of a nonrecurring charge for Firm Order Processing and monthly recurring charges for Central Office Modifications, assessed per arrangement, per square foot, and Common Systems Modifications, assessed per arrangement, per square foot for cageless and per cage for caged collocation. API shall remit payment of the nonrecurring Firm Order Processing Fee coincident with submission of a Bona Fide Firm Order. The recurring charges for space preparation apply beginning on the date on which BellSouth releases the Collocation Space for occupancy or on the date API first occupies the Collocation Space, whichever is sooner. The charges recover the costs associated with preparing the Collocation Space, which includes survey, engineering of the Collocation Space, design and modification costs for network, building and support systems. In the event API opts for cageless space, the space preparation fees will be assessed based on the total floor space dedicated to API as prescribed in Section 7.7.

7.3 Space Preparation Fee in Florida. Space preparation fees include a nonrecurring charge for Firm Order Processing and monthly recurring charges for Central Office Modifications, assessed per arrangement, per square foot, and Common Systems Modifications, assessed per arrangement, per square foot for cageless and per cage for caged collocation. API shall remit payment of the nonrecurring Firm Order Processing Fee coincident with submission of a Bona Fide Firm Order. The recurring charges for space preparation apply beginning on the date on which BellSouth releases the Collocation Space for occupancy or on the date API first occupies the Collocation Space, whichever is sooner. The charges recover the costs associated with preparing the Collocation Space, which includes survey, engineering of the Collocation Space, design and modification costs for network, building and support systems. In the event API opts for cageless space, space preparation fees will be assessed based on the total floor space dedicated to API as prescribed in Section 7.7

7.4 Space Preparation Fee in Georgia. In Georgia, the Space Preparation Fee is a one-time fee, assessed per arrangement, per location. It recovers a portion of costs associated with preparing the Collocation Space, which includes survey, engineering of the Collocation Space, design and modification costs for network, power, building and support systems. This is a set fee of $100 per square foot as established by the Georgia Public Service Commission Order in Docket No. 7061-U. In the event API opts for non-enclosed space, the space preparation fee will be assessed based on the total floor space dedicated to API as prescribed in Section 7.7.

7.5 Space Preparation Fee in North Carolina. In North Carolina, space preparation fees consist of monthly recurring charges for Central Office Modifications, assessed per arrangement, per square foot; Common Systems Modifications, assessed per arrangement, per square foot for cageless and per cage for caged collocation; and Power, assessed per the nominal –48V DC ampere requirements specified by API on the Bona Fide Application. The space preparation charges apply beginning on the date on which BellSouth releases the Collocation Space for occupancy or on the date API first occupies the Collocation Space, whichever is sooner. The charges recover the costs associated with preparing the Collocation Space, which includes survey,

engineering of the Collocation Space, design and modification costs for network, building and support systems. In the event API opts for cageless space, the space preparation fees will be assessed based on the total floor space dedicated to API as described in Section 7.7.

7.6 Cable Installation. Cable Installation Fee(s) are assessed per entrance cable placed.

7.7 Floor Space. The Floor Space Charge includes reasonable charges for lighting, HVAC, and other allocated expenses associated with maintenance of the Premises but does not recover any power-related costs incurred by BellSouth. When the Collocation Space is enclosed, API shall pay floor space charges based upon the number of square feet so enclosed. When the Collocation Space is not enclosed, API shall pay floor space charges based upon the following floor space calculation: [(depth of the equipment lineup in which the rack is placed) + (0.5 x maintenance aisle depth) + (0.5 x wiring aisle depth)] X (width of rack and spacers). For purposes of this calculation, the depth of the equipment lineup shall consider the footprint of equipment racks plus any equipment overhang. BellSouth will assign unenclosed Collocation Space in conventional equipment rack lineups where feasible. In the event API's collocated equipment requires special cable racking, isolated grounding or other treatment which prevents placement within conventional equipment rack lineups, API shall be required to request an amount of floor space sufficient to accommodate the total equipment arrangement. Floor space charges are due beginning with the date on which BellSouth releases the Collocation Space for occupancy or on the date API first occupies the Collocation Space, whichever is sooner.

7.8 Power. BellSouth shall make available –48 Volt (-48V) DC power for API's Collocation Space at a BellSouth Power Board or BellSouth Battery Distribution Fuse Bay ("BDFB") at API's option within the Premises.

7.8.1 Recurring charges for -48V DC power will be assessed per ampere per month based upon the BellSouth Certified Supplier engineered and installed power feed fused ampere capacity. Rates include redundant feeder fuse positions (A&B) and common cable rack to API's equipment or space enclosure. When obtaining power from a BDFB, fuses and power cables (A&B) must be engineered (sized), and installed by API's BellSouth Certified Supplier. When obtaining power from a BellSouth power board, power cables (A&B) must be engineered (sized), and installed by API's BellSouth Certified power Supplier. API is responsible for contracting with a BellSouth Certified Supplier for power distribution feeder cable runs from a BellSouth BDFB or power board to API's equipment. Determination of the BellSouth BDFB or BellSouth power board as the power source will be made at BellSouth's sole, but reasonable, discretion. The BellSouth Certified Supplier contracted by API must provide BellSouth a copy of the engineering power specification prior to the day on which API's equipment becomes operational ("Commencement Date"). BellSouth will provide the common power feeder cable support structure between the BellSouth BDFB or power board and API's

arrangement area. API shall contract with a BellSouth Certified Supplier who will be responsible for the following: dedicated power cable support structure within API's arrangement; power cable feeds; terminations of cable. Any terminations at a BellSouth power board must be performed by a BellSouth Certified power Supplier. API shall comply with all applicable National Electric Code (NEC), BellSouth TR73503, Telcordia (BellCore) and ANSI Standards regarding power cabling.

7.8.2 If BellSouth has not previously invested in power plant capacity for collocation at a specific site, API has the option to add its own dedicated power plant; provided, however, that such work shall be performed by a BellSouth Certified Supplier who shall comply with BellSouth's guidelines and specifications. Where the addition of API's dedicated power plant results in construction of a new power plant room, upon termination of API's right to occupy collocation space at such site, API shall have the right to remove its equipment from the power plant room, but shall otherwise leave the room intact.

7.8.3 If API elects to install its own DC Power Plant, BellSouth shall provide AC power to feed API's DC Power Plant. Charges for AC power will be assessed per breaker ampere per month. Rates include the provision of commercial and standby AC power. When obtaining power from a BellSouth service panel, protection devices and power cables must be engineered (sized), and installed by API's BellSouth Certified Supplier except that BellSouth shall engineer and install protection devices and power cables for Adjacent Collocation. API's BellSouth Certified Supplier must also provide a copy of the engineering power specification prior to the Commencement Date. Charges for AC power shall be assessed pursuant to the rates specified in Exhibit A. AC power voltage and phase ratings shall be determined on a per location basis. At API's option, API may arrange for AC power in an Adjacent Collocation arrangement from a retail provider of electrical power.

7.9 Security Escort. A security escort will be required whenever API or its approved agent desires access to the entrance manhole or must have access to the Premises after the one accompanied site visit allowed pursuant to Section 6.6.2 prior to completing BellSouth's Security Training requirements and/or prior to Space Acceptance. Rates for a security escort are assessed according to the schedule appended hereto as Exhibit A beginning with the scheduled escort time. BellSouth will wait for one-half (1/2) hour after the scheduled time for such an escort and API shall pay for such half-hour charges in the event API fails to show up.

7.10 Cable Record charges. These charges apply for work required to build cable records in company systems. The VG/DS0 per cable record charge is for a maximum of 3600 records. The Fiber cable record charge is for a maximum of 99 records.

7.11 Rate "True-Up". The Parties agree that the prices reflected as interim herein shall be "trued-up" (up or down) based on final prices either determined by further agreement or by an effective order, in a proceeding involving BellSouth before the regulatory authority for the state in which the services are being performed or any other body

having jurisdiction over this Agreement (hereinafter "Commission"). Under the "true-up" process, the interim price for each service shall be multiplied by the volume of that service purchased to arrive at the total interim amount paid for that service ("Total Interim Price"). The final price for that service shall be multiplied by the volume purchased to arrive at the total final amount due ("Total Final Price"). The Total Interim Price shall be compared with the Total Final Price. If the Total Final Price is more than the Total Interim Price, API shall pay the difference to BellSouth. If the Total Final Price is less than the Total Interim Price, BellSouth shall pay the difference to API. Each Party shall keep its own records upon which a "true-up" can be based and any final payment from one Party to the other shall be in an amount agreed upon by the Parties based on such records. In the event of any disagreement as between the records or the Parties regarding the amount of such "true-up," the Parties agree that the Commission shall be called upon to resolve such differences.

7.12 Other. If no rate is identified in the contract, the rate for the specific service or function will be negotiated by the Parties upon request by either Party. Payment of all other charges under this Attachment shall be due as dictated by API's current billing cycle. API will pay a late payment charge as specified in the current State Tariff.

8. Insurance

8.1 API shall, at its sole cost and expense, procure, maintain, and keep in force insurance as specified in this Section 8 and underwritten by insurance companies licensed to do business in the states applicable under this Attachment and having a Best's Insurance Rating of A-.

8.2 API shall maintain the following specific coverage:

8.2.1 Commercial General Liability coverage in the amount of ten million dollars ($10,000,000.00) or a combination of Commercial General Liability and Excess/Umbrella coverage totaling not less than ten million dollars ($10,000,000.00). BellSouth shall be named as an Additional Insured on the Commercial General Liability policy as specified herein.

8.2.2 Statutory Workers Compensation coverage and Employers Liability coverage in the amount of one hundred thousand dollars ($100,000.00) each accident, one hundred thousand dollars ($100,000.00) each employee by disease, and five hundred thousand dollars ($500,000.00) policy limit by disease.

8.2.3 All Risk Property coverage on a full replacement cost basis insuring all of API's real and personal property situated on or within BellSouth's Central Office location(s).

8.2.4 API may elect to purchase business interruption and contingent business interruption insurance, having been advised that BellSouth assumes no liability for loss of profit or revenues should an interruption of service occur.

8.3 The limits set forth in Section 8.2 above may be increased by BellSouth from time to time during the term of this Attachment upon thirty (30) days notice to API to at least such minimum limits as shall then be customary with respect to comparable occupancy of BellSouth structures.

8.4 All policies purchased by API shall be deemed to be primary and not contributing to or in excess of any similar coverage purchased by BellSouth. All insurance must be in effect on or before the date equipment is delivered to BellSouth's Premises and shall remain in effect for the term of this Attachment or until all API's property has been removed from BellSouth's Premises, whichever period is longer. If API fails to maintain required coverage, BellSouth may pay the premiums thereon and seek reimbursement of same from API.

8.5 API shall submit certificates of insurance reflecting the coverage required pursuant to this Section a minimum of ten (10) business days prior to the commencement of any work in the Collocation Space. Failure to meet this interval may result in construction and equipment installation delays. API shall arrange for BellSouth to receive thirty (30) business days' advance notice of cancellation from API's insurance company. API shall forward a certificate of insurance and notice of cancellation/non-renewal to BellSouth at the following address:

BellSouth Telecommunications, Inc.
Attn.: Risk Management Coordinator
17H53 BellSouth Center
675 W. Peachtree Street
Atlanta, Georgia 30375

8.6 API must conform to recommendations made by BellSouth's fire insurance company to the extent BellSouth has agreed to, or shall hereafter agree to, such recommendations.

8.7 Self-Insurance. If API's net worth exceeds five hundred million dollars ($500,000,000), API may elect to request self-insurance status in lieu of obtaining any of the insurance required in Sections 8.2.1 and 8.2.2. API shall provide audited financial statements to BellSouth thirty (30) days prior to the commencement of any work in the Collocation Space. BellSouth shall then review such audited financial statements and respond in writing to API in the event that self-insurance status is not granted to API. If BellSouth approves API for self-insurance, API shall annually furnish to BellSouth, and keep current, evidence of such net worth that is attested to by one of API's corporate officers. The ability to self-insure shall continue so long as the API meets all of the requirements of this Section. If the API subsequently no longer satisfies this Section, API is required to purchase insurance as indicated by Sections 8.2.1 and 8.2.2.

8.8 The net worth requirements set forth in Section 8.7 may be increased by BellSouth from time to time during the term of this Attachment upon thirty (30) days' notice to

API to at least such minimum limits as shall then be customary with respect to comparable occupancy of BellSouth structures.

8.9 Failure to comply with the provisions of this Section will be deemed a material breach of this Attachment.

9. Mechanics Liens

9.1 If any mechanics lien or other liens shall be filed against property of either Party (BellSouth or API), or any improvement thereon by reason of or arising out of any labor or materials furnished or alleged to have been furnished or to be furnished to or for the other Party or by reason of any changes, or additions to said property made at the request or under the direction of the other Party, the other Party directing or requesting those changes shall, within thirty (30) business days after receipt of written notice from the Party against whose property said lien has been filed, either pay such lien or cause the same to be bonded off the affected property in the manner provided by law. The Party causing said lien to be placed against the property of the other shall also defend, at its sole cost and expense, on behalf of the other, any action, suit or proceeding which may be brought for the enforcement of such liens and shall pay any damage and discharge any judgment entered thereon.

10. Inspections

10.1 BellSouth may conduct an inspection of API's equipment and facilities in the Collocation Space(s) prior to the activation of facilities between API's equipment and equipment of BellSouth. BellSouth may conduct an inspection if API adds equipment and may otherwise conduct routine inspections at reasonable intervals mutually agreed upon by the Parties. BellSouth shall provide API with a minimum of forty-eight (48) hours or two (2) business days, whichever is greater, advance notice of all such inspections. All costs of such inspection shall be borne by BellSouth.

11. Security and Safety Requirements

11.1 The security and safety requirements set forth in this section are as stringent as the security requirements BellSouth maintains at its own premises either for their own employees or for authorized contractors. Only BellSouth employees, BellSouth Certified Contractors and authorized employees, authorized Guests, pursuant to Section 3.4, preceeding, or authorized agents of API will be permitted in the BellSouth Premises. API shall provide its employees and agents with picture identification which must be worn and visible at all times while in the Collocation Space or other areas in or around the Premises. The photo Identification card shall bear, at a minimum, the employee's name and photo, and the API name. BellSouth reserves the right to remove from its premises any employee of API not possessing identification issued by API or who have violated any of BellSouth's policies as

outlined in the CLEC Security Training documents. API shall hold BellSouth harmless for any damages resulting from such removal of its personnel from BellSouth premises. API shall be solely responsible for ensuring that any Guest of API is in compliance with all subsections of this Section 11.

11.1.1 API will be required, at its own expense, to conduct a statewide investigation of criminal history records for each API employee being considered for work on the BellSouth Premises, for the states/counties where the API employee has worked and lived for the past five years. Where state law does not permit statewide collection or reporting, an investigation of the applicable counties is acceptable. API shall not be required to perform this investigation if an affiliated company of API has performed an investigation of the API employee seeking access, if such investigation meets the criteria set forth above. This requirement will not apply if API has performed a pre-employment statewide investigation of criminal history records, or where state law does not permit an investigation of the applicable counties for the API employee seeking access, for the states/counties where the API employee has worked and lived for the past five years.

11.1.2 API will be required to administer to their personnel assigned to the BellSouth Premises security training either provided by BellSouth, or meeting criteria defined by BellSouth.

11.1.3 API shall not assign to the BellSouth Premises any personnel with records of felony criminal convictions. API shall not assign to the BellSouth Premises any personnel with records of misdemeanor convictions, except for misdemeanor traffic violations, without advising BellSouth of the nature and gravity of the offense(s). BellSouth reserves the right to refuse building access to any API personnel who have been identified to have misdemeanor criminal convictions. Notwithstanding the foregoing, in the event that API chooses not to advise BellSouth of the nature and gravity of any misdemeanor conviction, API may, in the alternative, certify to BellSouth that it shall not assign to the BellSouth Premises any personnel with records of misdemeanor convictions (other than misdemeanor traffic violations).

11.1.4 API shall not knowingly assign to the BellSouth Premises any individual who was a former employee of BellSouth and whose employment with BellSouth was terminated for a criminal offense whether or not BellSouth sought prosecution of the individual for the criminal offense.

11.1.5 API shall not knowingly assign to the BellSouth Premises any individual who was a former contractor of BellSouth and whose access to a BellSouth Premises was revoked due to commission of a criminal offense whether or not BellSouth sought prosecution of the individual for the criminal offense.

11.1.6 For each API employee requiring access to a BellSouth Premises pursuant to this Attachment, API shall furnish BellSouth, prior to an employee gaining such access, a certification that the aforementioned background check and security training were

completed. The certification will contain a statement that no felony convictions were found and certifying that the security training was completed by the employee. If the employee's criminal history includes misdemeanor convictions, API will disclose the nature of the convictions to BellSouth at that time. In the alternative, API may certify to BellSouth that it shall not assign to the BellSouth Premises any personnel with records of misdemeanor convictions other than misdemeanor traffic violations.

11.1.7 At BellSouth's request, API shall promptly remove from BellSouth's Premises any employee of API BellSouth does not wish to grant access to its premises 1) pursuant to any investigation conducted by BellSouth or 2) prior to the initiation of an investigation in the event that an employee of API is found interfering with the property or personnel of BellSouth or another CLEC, provided that an investigation shall promptly be commenced by BellSouth.

11.2 Notification to BellSouth. BellSouth reserves the right to interview API's employees, agents, or contractors in the event of wrongdoing in or around BellSouth's property or involving BellSouth's or another CLEC's property or personnel, provided that BellSouth shall provide reasonable notice to API's Security contact of such interview. API and its contractors shall reasonably cooperate with BellSouth's investigation into allegations of wrongdoing or criminal conduct committed by, witnessed by, or involving API's employees, agents, or contractors. Additionally, BellSouth reserves the right to bill API for all reasonable costs associated with investigations involving its employees, agents, or contractors if it is established and mutually agreed in good faith that API's employees, agents, or contractors are responsible for the alleged act. BellSouth shall bill API for BellSouth property which is stolen or damaged where an investigation determines the culpability of API's employees, agents, or contractors and where API agrees, in good faith, with the results of such investigation. API shall notify BellSouth in writing immediately in the event that the CLEC discovers one of its employees already working on the BellSouth premises is a possible security risk. Upon request of the other Party, the Party who is the employer shall discipline consistent with its employment practices, up to and including removal from BellSouth Premises, any employee found to have violated the security and safety requirements of this section. API shall hold BellSouth harmless for any damages resulting from such removal of its personnel from BellSouth premises.

11.3 Use of Supplies. Unauthorized use of telecommunications equipment or supplies by either Party, whether or not used routinely to provide telephone service (e.g. plug-in cards,) will be strictly prohibited and handled appropriately. Costs associated with such unauthorized use may be charged to the offending Party, as may be all associated investigative costs.

11.4 Use of Official Lines. Except for non-toll calls necessary in the performance of their work, neither Party shall use the telephones of the other Party on the BellSouth Premises. Charges for unauthorized telephone calls may be charged to the offending Party, as may be all associated investigative costs.

11.5 Accountability. Full compliance with the Security requirements of this section shall in no way limit the accountability of either Party to the other for the improper actions of its employees.

12. Destruction of Collocation Space

12.1 In the event a Collocation Space is wholly or partially damaged by fire, windstorm, tornado, flood or by similar causes to such an extent as to be rendered wholly unsuitable for API's permitted use hereunder, then either Party may elect within ten (10) business days after such damage, to terminate occupancy of the damaged Collocation Space, and if either Party shall so elect, by giving the other written notice of termination, both Parties shall stand released of and from further liability under the terms hereof. If the Collocation Space shall suffer only minor damage and shall not be rendered wholly unsuitable for API's permitted use, or is damaged and the option to terminate is not exercised by either Party, BellSouth covenants and agrees to proceed promptly without expense to API, except for improvements not the property of BellSouth, to repair the damage. BellSouth shall have a reasonable time within which to rebuild or make any repairs, and such rebuilding and repairing shall be subject to delays caused by storms, shortages of labor and materials, government regulations, strikes, walkouts, and causes beyond the control of BellSouth, which causes shall not be construed as limiting factors, but as exemplary only. API may, at its own expense, accelerate the rebuild of its collocated space and equipment provided however that a BellSouth Certified Contractor is used and the necessary space preparation has been completed. Rebuild of equipment must be performed by a BellSouth Certified Vendor. If API's acceleration of the project increases the cost of the project, then those additional charges will be incurred by API. Where allowed and where practical, API may erect a temporary facility while BellSouth rebuilds or makes repairs. In all cases where the Collocation Space shall be rebuilt or repaired, API shall be entitled to an equitable abatement of rent and other charges, depending upon the unsuitability of the Collocation Space for API's permitted use, until such Collocation Space is fully repaired and restored and API's equipment installed therein (but in no event later than thirty (30) business days after the Collocation Space is fully repaired and restored). Where API has placed an Adjacent Arrangement pursuant to Section 3.5, API shall have the sole responsibility to repair or replace said Adjacent Arrangement provided herein. Pursuant to this section, BellSouth will restore the associated services to the Adjacent Arrangement.

13. Eminent Domain

13.1 If the whole of a Collocation Space or Adjacent Arrangement shall be taken by any public authority under the power of eminent domain, then this Attachment shall terminate with respect to such Collocation Space or Adjacent Arrangement as of the day possession shall be taken by such public authority and rent and other charges for the Collocation Space or Adjacent Arrangement shall be paid up to that day with

proportionate refund by BellSouth of such rent and charges as may have been paid in advance for a period subsequent to the date of the taking. If any part of the Collocation Space or Adjacent Arrangement shall be taken under eminent domain, BellSouth and API shall each have the right to terminate this Attachment with respect to such Collocation Space or Adjacent Arrangement and declare the same null and void, by written notice of such intention to the other Party within ten (10) business days after such taking.

14. Nonexclusivity

14.1 API understands that this Attachment is not exclusive and that BellSouth may enter into similar agreements with other Parties. Assignment of space pursuant to all such agreements shall be determined by space availability and made on a first come, first served basis.

EXHIBIT A: BELLSOUTH/API RATES – ALABAMA PHYSICAL COLLOCATION

Rates marked with an asterisk (*) are interim and are subject to true-up

USOC	Rate Element Description	Unit	Recurring Rate (RC)	Non-Recurring Rate (NRC)
PE1BA	Application Fee	Per request	NA	$3,760.00
PE1CA	Subsequent Application Fee	Per request	NA	$3,134.00 Minimum
	Space Preparation Fees			
PE1SJ	Firm Order Processing*			$1,211.00
PE1SK	Central Office Modifications*	Per sq. ft.	$2.24	
PE1SL	Common Systems Modifications – Cageless*	Per sq. ft.	$3.01	
PE1SM	Common Systems Modifications – Caged*	Per cage	$102.16	
	Space Enclosure (100 sq. ft. minimum)			
PE1BW	Welded Wire-mesh	Per first 100 sq. ft.	$178.65	NA
PE1CW	Welded Wire-mesh	Per add'l 50 sq. ft.	$17.52	NA
PE1PJ	Floor Space	Per sq. ft.	$3.68	NA
PE1BD	Cable Installation	Per cable	NA	$1,751.00
PE1PM	Cable Support Structure	Per entrance cable	$19.67	NA
	Power			
PE1PL	-48V DC Power*	Per amp	$9.00	NA
PE1FB	120V AC Power single phase*	Per breaker amp	$5.63	-
PE1FD	240V AC Power single phase*	Per breaker amp	$11.26	-
PE1FE	120V AC Power three phase*	Per breaker amp	$16.89	-
PE1FG	277 AC Power three phase*	Per breaker amp	$38.99	-
	Cross Connects	Per cross connect		First/Add'l
PE1P2	2-wire		$.031	$33.68/$31.79
PE1P4	4-wire		$.062	$33.63/$31.67
PE1P1	DS-1		$1.28	$52.93/$39.87
PE1P3	DS-3		$16.27	$51.99/$38.59
PE1F2	2-fiber		$3.23	$52.00/$38.60
PE1F4	4-fiber		$5.73	$64.54/$51.14

ALABAMA (continued)				
USOC	**Rate Element Description**	**Unit**	**Recurring Rate (RC)**	**Non-Recurring Rate (NRC)**
PE1AX	Security Access System Security System*	Per central office	$52.27	
PE1A1	New Access Card Activation*	Per card	$.059	$55.57
PE1AA	Administrative change, existing card*	Per card		$15.58
PE1AR	Replace lost or stolen card*	Per card		$45.56
PE1AK	Initial Key	Per key	NA	$26.19
PE1AL	Replace lost or stolen key	Per key	NA	$26.19
PE1SR	Space Availability Report*	Per premises requested		$2,150.00
	POT Bay Arrangements *Prior to 6/1/99*	Per cross connect		
PE1PE	2-Wire Cross-Connect		$0.08	NA
PE1PF	4-Wire Cross-Connect		$0.17	NA
PE1PG	DS1 Cross-Connect		$0.69	NA
PE1PH	DS3 Cross-Connect		$4.74	NA
PE1B2	2-Fiber Cross-Connect		$32.02	NA
PE1B4	4-Fiber Cross-Connect		$40.48	NA
	Cable Records[1]			**Note 2** Initial/Subsequent
PE1CR	Cable Records	Per request	NA	$1708/$1166
PE1CD	VG/DS0 Cable	Per cable record	NA	$923.51/$923.51
PE1CO	VG/DS0 Cable	Per each 100 pair	NA	$18.02/$18.02
PE1C1	DS1	Per T1TIE	NA	$8.44/$8.44
PE1C3	DS3	Per T3TIE	NA	$29.53/$29.53
PE1CB	Fiber Cable	Per cable record	NA	$278.95/$278.95

ALABAMA (continued)				
USOC	**Rate Element Description**	**Unit**	**Recurring Rate (RC)**	**Non-Recurring Rate (NRC)**
	Security Escort	Per half hr/add'l half hr		
PE1BT	Basic Time		NA	$33.85/$21.45
PE1OT	Overtime		NA	$44.09/$27.71
PE1PT	Premium Time		NA	$54.33/$33.96

Note(s):

N/A refers to rate elements which do not have a negotiated rate.

Note1: Cable records charges apply for work required to build cable records in company systems. The VG/DS0 per cable record charge is for a maximum of 3600 records. The Fiber cable record charge is for a maximum of 99 records.

Note 2: The initial charge applies when the cables are first installed and inventoried. The subsequent charge applies when additional cables are installed and inventoried at the same location.

EXHIBIT A: BELLSOUTH/API RATES – FLORIDA PHYSICAL COLLOCATION

USOC	Rate Element Description	Unit	Recurring Rate (RC)	Non-Recurring Rate (NRC)
PE1BA	Application Fee	Per request		$3,791.00
PE1CA	Subsequent Application Fee	Per request	NA	$3,160.00
	Space Preparation Fees			
PE1SJ	Firm Order Processing			$1,211.00
PE1SK	Central Office Modifications	Per sq. ft.	$2.58	
PE1SL	Common Systems Modifications – Cageless	Per sq. ft.	$2.96	
PE1SM	Common Systems Modifications – Caged	Per cage	$100.66	
	Space Enclosure (100 sq. ft. minimum)			
PE1BW	Wire Cage	Per first 100 sq. ft.	$205.93	NA
PE1CW	Wire Cage	Per add'l 50 sq. ft.	$20.20	NA
PE1PJ	Floor Space	Per sq. ft.	$6.57	NA
PE1BD	Cable Installation	Per cable		$1,826.00
PE1PM	Cable Support Structure		$21.66	NA
	Power			
PE1PL	-48V DC Power	Per amp	$8.86	NA
PE1FB	120V AC Power single phase	Per breaker amp	$5.62	-
PE1FD	240V AC Power single phase	Per breaker amp	$11.26	-
PE1FE	120V AC Power three phase	Per breaker amp	$16.88	-
PE1FG	277 AC Power three phase	Per breaker amp	$38.98	-
	Cross Connects			First/Add'l
	2-wire	Per cross connect	$.074	$34.53/$32.51
	4-wire	Per cross connect	$.148	$34.54/$32.53
	DS1	Per cross connect	$1.29	$54.15/$40.94
	DS3	Per cross connect	$17.48	$53.28/$39.65
	2-fiber	Per cross connect	$2.96	$53.28/$39.66
	4-fiber	Per cross connect	$5.66	$66.08/$52.47

FLORIDA (continued)				
USOC	**Rate Element Description**	**Unit**	**Recurring Rate (RC)**	**Non-Recurring Rate (NRC)**
PE1AX	Security Access System	Per premises	$89.48	
	Security System			
PE1A1	New Access Card Activation	Per card	$.06	$56.03
PE1AA	Administrative change, existing card	Per card		$15.71
PE1AR	Replace lost or stolen card	Per card		$45.93
PE1AK	Initial Key	Per key	NA	$26.41
PE1AL	Replace lost or stolen key	Per key	NA	$26.41
PE1SR	Space Availability Report	Per premises requested		$2,168.00
	POT Bay **(Note 1)**		NA	NA
	Cable Records[2]			**Note 3**
				initial/subsequent
PE1CR	Cable Records	Per request	NA	$1709/$1166
PE1CD	VG/DS0 Cable	Per cable record	NA	$923.86/$923.86
PE1CO	VG/DS0 Cable	Per each 100 pair	NA	$18.03/$18.03
PE1C1	DS1	Per T1TIE	NA	$8.44/$8.44
PE1C3	DS3	Per T3TIE	NA	$29.54/$29.54
PE1CB	Fiber Cable	Per cable record	NA	$279.05/$279.05
	Security Escort	Per ¼ hour		
PE1BQ	Basic Time		NA	$10.89
PE1OQ	Overtime		NA	$13.64
PE1PQ	Premium Time		NA	$16.40

Note(s):

N/A refers to rate elements which do not have a negotiated rate.

(1) **POT Bays**: BellSouth's Florida specific rates were established in the Florida Public Service Commission Docket No. 960833. The Commission did not set permanent rates for POT Bays, given the assumption by the Parties to the Proceeding that they will always provide their own POT Bays. It will be necessary for API to provide its own POT Bays per BellSouth specifications and provide the necessary information from which BellSouth can inventory.

(2) Cable records charges apply for work required to build cable records in company systems. The VG/DS0 per cable record charge is for a maximum of 3600 records. The Fiber cable record charge is for a maximum of 99 records.

(3) The initial charge applies when the cables are first installed and inventoried. The subsequent charge applies when additional cables are installed and inventoried at the same location.

EXHIBIT A: BELLSOUTH/API RATES – GEORGIA PHYSICAL COLLOCATION

Rates marked with an asterisk (*) are interim and subject to true-up

USOC	Rate Element Description	Unit	Recurring Rate (RC)	Non-Recurring Rate (NRC)
PE1BA	Application Fee	Per request	NA	$3,755.00
PE1CA	Subsequent Application Fee	Per request	NA	$3,130.00 Minimum
PE1BB	Space Preparation Fee **(Note 2)**	Per sq. ft.	NA	$100.00
	Space Enclosure (100 sq. ft. minimum)			
PE1BW	Welded Wire-mesh	Per first 100 sq. ft.	$187.36	NA
PE1CW	Welded Wire-mesh	Per add'l 50 sq. ft.	$18.38	NA
	Floor Space			
PE1PJ	Zone A	Per sq. ft.	$4.47	NA
PE1PK	Zone B	Per sq. ft.	$4.47	NA
PE1BD	Cable Installation	Per cable	NA	$1,693.00
PE1PM	Cable Support Structure	Per entrance cable	$19.26	NA
	Power			
PE1PL	-48V DC Power	Per amp	$5.00	NA
PE1FB	120V AC Power single phase*	Per breaker amp	$5.52	-
PE1FD	240V AC Power single phase*	Per breaker amp	$11.05	-
PE1FE	120V AC Power three phase*	Per breaker amp	$16.58	-
PE1FG	277 AC Power three phase*	Per breaker amp	$38.27	-
	Cross Connects	Per cross connect		First/Add'l
PE1P2	2-wire		$0.030	$33.76/$31.86
PE1P4	4-wire		$0.061	$33.77/$31.80
PE1P1	DS-1		$1.13	$53.05/$39.99
PE1P3	DS-3		$14.43	$52.14/$38.71
PE1F2	2-fiber		$2.86	$52.14/$38.72
PE1F4	4-fiber		$5.08	$64.74/$51.31

GEORGIA (continued)				
USOC	**Rate Element Description**	**Unit**	**Recurring Rate (RC)**	**Non-Recurring Rate (NRC)**
PE1AX	Security Access System Security System*	Per premises	$40.00	
PE1A1	New Access Card Activation*	Per card	$.058	$55.51
PE1AA	Administrative change, existing card*	Per card		$15.56
PE1AR	Replace lost or stolen card*	Per card		$45.50
PE1AK	Initial Key	Per key	NA	$26.16
PE1AL	Replace lost or stolen key	Per key	NA	$26.16
PE1SR	Space Availability Report*	Per premises requested		$2,148.00
	POT Bay Arrangements *Prior to 6/1/99*	Per cross-connect		
PE1PE	2-Wire Cross-Connect		$0.40	NA
PE1PF	4-Wire Cross-Connect		$1.20	NA
PE1PG	DS1 Cross-Connect		$1.20	NA
PE1PH	DS3 Cross-Connect		$8.00	NA
PE1B2	2 Fiber Cross-Connect		$38.79	NA
PE1B4	4 Fiber Cross-Connect		$52.31	NA
	Cable Records[1]			**Note 2** Initial/subsequent
PE1CR	Cable Records	Per request	NA	$1706/$1164
PE1CD	VG/DS0 Cable	Per cable record	NA	$922.38/$922.38
PE1CO	VG/DS0 Cable	Per each 100 pair	NA	$18.00/$18.00
PE1C1	DS1	Per T1TIE	NA	$8.43/$8.43
PE1C3	DS3	Per T3TIE	NA	$29.49/$29.49
PE1CB	Fiber Cable	Per cable record	NA	$278.61/$278.61
	Security Escort	Per half hr./Add'l half hr.		
PE1BT	Basic Time		NA	$33.81/$21.42
PE1OT	Overtime		NA	$44.03/$27.67
PE1PT	Premium Time		NA	$54.26/$33.92

N/A refers to rate elements which do not have a negotiated rate.

Note (1) Cable records charges apply for work required to build cable records in company systems. The VG/DS0 per cable record charge is for a maximum of 3600 records. The Fiber cable record charge is for a maximum of 99 records.

Note 2: The initial charge applies when the cables are first installed and inventoried. The subsequent charge applies when additional cables are installed and inventoried at the same location.

EXHIBIT A: BELLSOUTH/API RATES – KENTUCKY PHYSICAL COLLOCATION

Rates marked with an asterisk (*) are interim and are subject to true-up.

USOC	Rate Element Description	Unit	Recurring Rate (RC)	Non-Recurring Rate (NRC)
PE1BA	Application Fee	Per request	NA	$3,761.00
PE1CA	Subsequent Application Fee	Per request	NA	$3,135.00 Minimum
	Space Preparation Fees			
PE1SJ	Firm Order Processing*			$1,202.00
PE1SK	Central Office Modifications*	Per sq. ft.	$2.38	
PE1SL	Common Systems Modifications – Cageless*	Per sq. ft.	$3.30	
PE1SM	Common Systems Modifications – Caged*	Per cage	$112.11	
	Space Enclosure (100 sq. ft. minimum)			
PE1BW	Welded Wire-mesh	Per first 100 sq. ft.	$189.85	NA
PE1CW	Welded Wire-mesh	Per add'l 50 sq. ft.	$18.62	NA
PE1PJ	Floor Space	Per sq. ft.	$8.20	NA
PE1BD	Cable Installation	Per cable	NA	$1,755.00
PE1PM	Cable Support Structure	Per entrance cable	$20.14	NA
	Power			
PE1PL	-48V DC Power*	Per amp	$8.77	NA
PE1FB	120V AC Power single phase*	Per breaker amp	$5.58	-
PE1FD	240V AC Power single phase*	Per breaker amp	$11.16	-
PE1FE	120V AC Power three phase*	Per breaker amp	$16.74	-
PE1FG	277 AC Power three phase*	Per breaker amp	$38.65	-
	Cross Connects	Per cross connect		First/Add'l
PE1P2	2-wire		$0.037	$33.67/$31.78
PE1P4	4-wire		$0.075	$33.66/$31.70
PE1P1	DS-1		$1.51	$52.97/$39.90
PE1P3	DS-3		$19.15	$52.04/$38.62
PE1F2	2-fiber		$3.80	$52.04/$38.63
PE1F4	4-fiber		$6.75	$64.59/$51.18

KENTUCKY (continued)				
USOC	**Rate Element Description**	**Unit**	**Recurring Rate (RC)**	**Non-Recurring Rate (NRC)**
PE1AX	Security Access System	Per premises	$78.11	
	Security System*			
PE1A1	New Access Card Activation	Per card	$.059	$55.59
PE1AA	Administrative change, existing card	Per card		$15.59
PE1AR	Replace lost or stolen card	Per card		$45.58
PE1AK	Initial Key	Per key	NA	$26.20
PE1AL	Replace lost or stolen key	Per key	NA	$26.20
PE1SR	Space Availability Report	Per premises requested		$2,151
	POT Bay Arrangements	Per cross-connect		
	Prior to 6/1/99			
PE1PE	2-Wire Cross-Connect		$0.06	NA
PE1PF	4-Wire Cross-Connect		$0.15	NA
PE1PG	DS1 Cross-Connect		$0.58	NA
PE1PH	DS3 Cross-Connect		$4.51	NA
PE1B2	2 Fiber Cross-Connect		$38.79	NA
PE1B4	4 Fiber Cross-Connect		$52.31	NA
	Security Escort	Per half hr./Add'l half hr.		
PE1BT	Basic Time		NA	$33.86/$21.46
PE1OT	Overtime		NA	$44.10/$27.72
PE1PT	Premium Time		NA	$54.35/$33.97
	Cable Records[1]			**Note 2**
				Initial/subsequent
PE1CR	Cable Records	Per request	NA	$1709/1166
PE1CD	VG/DS0 Cable	Per cable record	NA	$923.83/$923.83
PE1CO	VG/DS0 Cable	Per each 100 pair	NA	$18.03/$18.03
PE1C1	DS1	Per T1TIE	NA	$8.44/$8.44
PE1C3	DS3	Per T3TIE	NA	$29.54/$29.54
PE1CB	Fiber Cable	Per cable record	NA	$279.05/$279.05

Note(s):

N/A refers to rate elements which do not have a negotiated rate.

Note1: Cable records charges apply for work required to build cable records in company systems. The VG/DS0 per cable record charge is for a maximum of 3600 records. The Fiber cable record charge is for a maximum of 99 records.

Note 2: The initial charge applies when the cables are first installed and inventoried. The subsequent charge applies when additional cables are installed and inventoried at the same location.

EXHIBIT A: BELLSOUTH/API RATES – LOUISIANA PHYSICAL COLLOCATION

Rates marked with an asterisk (*) are interim and are subject to true-up.

USOC	Rate Element Description	Unit	Recurring Rate (RC)	Non-Recurring Rate (NRC)
PE1BA	Application Fee	Per request	NA	$3756.00
PE1CA	Subsequent Application Fee	Per request	NA	$3131.00 Minimum
	Space Preparation Fees			
PE1SJ	Firm Order Processing*			$1,200.00
PE1SK	Central Office Modifications*	Per sq. ft.	$2.60	
PE1SL	Common Systems Modifications – Cageless*	Per sq. ft.	$3.15	
PE1SM	Common Systems Modifications – Caged*	Per cage	$105.87	
	Space Enclosure (100 sq. ft. minimum)			
PE1BW	Welded Wire-mesh	Per first 100 sq. ft.	$207.06	NA
PE1CW	Welded Wire-mesh	Per add'l 50 sq. ft.	$20.31	NA
PE1PJ	Floor Space	Per sq. ft.	$5.94	NA
PE1BD	Cable Installation	Per cable	NA	$1,753.00
PE1PM	Cable Support Structure	Per entrance cable	$21.16	NA
	Power			
PE1PL	-48V DC Power*	Per amp	$9.20	NA
PE1FB	120V AC Power single phase*	Per breaker amp	$5.66	-
PE1FD	240V AC Power single phase*	Per breaker amp	$11.34	-
PE1FE	120V AC Power three phase*	Per breaker amp	$17.00	-
PE1FG	277 AC Power three phase*	Per breaker amp	$39.26	-
	Cross Connects	Per cross connect		First/Add'l
PE1P2	2-wire		$0.036	$33.61/$31.76
PE1P4	4-wire		$0.073	$33.53/$31.58
PE1P1	DS-1		$1.20	$52.80/$39.76
PE1P3	DS-3		$15.26	$51.86/$38.49

LOUISIANA (continued)				
USOC	**Rate Element Description**	**Unit**	**Recurring Rate (RC)**	**Non-Recurring Rate (NRC)**
	Cross Connects (continued)	Per cross connect		First/Add'l
PE1F2	2-fiber		$3.03	$51.86/$38.49
PE1F4	4-fiber		$5.38	$64.36/$50.99
PE1AX	Security Access System	Per premises	$60.60	
	Security System*			
PE1A1	New Access Card Activation*	Per card	$.060	$55.51
PE1AA	Administrative change, existing card*	Per card		$15.57
PE1AR	Replace lost or stolen card	Per card		$45.51
PE1AK	Initial Key	Per key	NA	$26.16
PE1AL	Replace lost or stolen key	Per key	NA	$26.16
PE1SR	Space Availability Report*	Per premises requested		$2,148
	POT Bay Arrangements	Per cross-connect		
	Prior to 6/1/99			
PE1PE	2-Wire Cross-Connect		$0.0776	NA
PE1PF	4-Wire Cross-Connect		$0.1552	NA
PE1PG	DS1 Cross-Connect		$0.6406	NA
PE1PH	DS3 Cross-Connect		$4.75	NA
PE1B2	2 Fiber Cross-Connect		$47.44	NA
PE1B4	4 Fiber Cross-Connect		$63.97	NA
	Cable Records[1]			**Note 2**
				Initial/subsequent
PE1CR	Cable Records	Per request	NA	$1706/$1165
PE1CD	VG/DS0 Cable	Per cable record	NA	$922.51/$922.51
PE1CO	VG/DS0 Cable	Per each 100 pair	NA	$18.00/$18.00
PE1C1	DS1	Per T1TIE	NA	$8.43/$8.43
PE1C3	DS3	Per T3TIE	NA	$29.49/$29.49
PE1CB	Fiber Cable	Per cable record	NA	$278.65/$278.65

LOUISIANA (continued)				
USOC	**Rate Element Description**	**Unit**	**Recurring Rate (RC)**	**Non-Recurring Rate (NRC)**
	Security Escort	Per half hr./Add'l half hr.		
PE1BT	Basic Time		NA	$33.97/$21.53
PE1OT	Overtime		NA	$44.25/$27.81
PE1PT	Premium Time		NA	$54.53/$34.09

Note(s):

N/A refers to rate elements which do not have a negotiated rate.

Note1: Cable records charges apply for work required to build cable records in company systems. The VG/DS0 per cable record charge is for a maximum of 3600 records. The Fiber cable record charge is for a maximum of 99 records.

Note 2: The initial charge applies when the cables are first installed and inventoried. The subsequent charge applies when additional cables are installed and inventoried at the same location.

EXHIBIT A: BELLSOUTH/API RATES – MISSISSIPPI PHYSICAL COLLOCATION

Rates marked with an asterisk (*) are interim and are subject to true-up.

USOC	Rate Element Description	Unit	Recurring Rate (RC)	Non-Recurring Rate (NRC)
PE1BA	Application Fee	Per request	NA	$3,755.00
PE1CA	Subsequent Application Fee	Per request	NA	$3,130.00 Minimum
	Space Preparation Fees			
PE1SJ	Firm Order Processing*			$1,200.00
PE1SK	Central Office Modifications*	Per sq. ft.	$2.61	
PE1SL	Common Systems Modifications – Cageless*	Per sq. ft.	$2.88	
PE1SM	Common Systems Modifications – Caged*	Per cage	$97.85	
	Space Enclosure(100 sq. ft. minimum)			
PE1BW	Welded Wire-mesh	Per first 100 sq. ft.	$208.30	NA
PE1CW	Welded Wire-mesh	Per add'l 50 sq. ft.	$20.43	NA
PE1PJ	Floor Space	Per sq. ft.	$6.53	
PE1BD	Cable Installation	Per cable	NA	$1,871.00
PE1PM	Cable Support Structure	Per entrance cable	$19.90	NA
	Power			
PE1PL	-48V DC Power*	Per amp	$8.96	NA
PE1FB	120V AC Power single phase*	Per breaker amp	$5.61	-
PE1FD	240V AC Power single phase*	Per breaker amp	$11.23	-
PE1FE	120V AC Power three phase*	Per breaker amp	$16.84	-
PE1FG	277 AC Power three phase*	Per breaker amp	$38.89	-
	Cross Connects	Per cross connect		First/Add'l
PE1P2	2-wire		$.038	$33.65/$31.77
PE1P4	4-wire		$.076	$33.46/$31.52

MISSISSIPPI (continued)				
USOC	**Rate Element Description**	**Unit**	**Recurring Rate (RC)**	**Non-Recurring Rate (NRC)**
	Cross Connects (continued)	Per cross connect		First/Add'l
PE1P1	DS-1		$1.30	$52.73/$39.70
PE1P3	DS-3		$16.55	$51.78/$38.43
PE1F2	2-fiber		$3.28	$51.78/$38.43
PE1F4	4-fiber		$5.83	$64.27/$50.91
PE1AX	Security Access System	Per premises	$85.54	
	Security System*			
PE1A1	New Access Card Activation*	Per card	$.061	$55.50
PE1AA	Administrative change, existing card*	Per card		$15.56
PE1AR	Replace lost or stolen card	Per card		$45.50
PE1AK	Initial Key	Per key	NA	$26.16
PE1AL	Replace lost or stolen key	Per key	NA	$26.16
PE1SR	Space Availability Report*	Per premises requested		$2,147.00
	POT Bay Arrangements	Per cross-connect		
	Prior to 6/1/99			
PE1PE	2-Wire Cross-Connect		$0.1195	NA
PE1PF	4-Wire Cross-Connect		$0.2389	NA
PE1PG	DS1 Cross-Connect		$0.9862	NA
PE1PH	DS3 Cross-Connect		$5.81	NA
PE1B2	2 Fiber Cross-Connect		$38.79	NA
PE1B4	4 Fiber Cross-Connect		$52.31	NA
	Cable Records[1]			**Note 2**
				Initial/subsequent
PE1CR	Cable Records	Per request	NA	$1706/1164
PE1CD	VG/DS0 Cable	Per cable record	NA	$922.28/$922.28
PE1CO	VG/DS0 Cable	Per each 100 pair	NA	$18.00/$18.00
PE1C1	DS1	Per T1TIE	NA	$8.42/$8.42
PE1C3	DS3	Per T3TIE	NA	$29.49/$29.49
PE1CB	Fiber Cable	Per cable record	NA	$278.58/$278.58

MISSISSIPPI (continued)				
USOC	**Rate Element Description**	**Unit**	**Recurring Rate (RC)**	**Non-Recurring Rate (NRC)**
	Security Escort	Per half hr./Add'l half hr.		
PE1BT	Basic Time		NA	$33.80/$21.42
PE1OT	Overtime		NA	$44.03/$27.67
PE1PT	Premium Time		NA	$54.26/$33.92

Note(s):

N/A refers to rate elements which do not have a negotiated rate.

Note1: Cable records charges apply for work required to build cable records in company systems. The VG/DS0 per cable record charge is for a maximum of 3600 records. The Fiber cable record charge is for a maximum of 99 records.

Note 2: The initial charge applies when the cables are first installed and inventoried. The subsequent charge applies when additional cables are installed and inventoried at the same location.

EXHIBIT A: BELLSOUTH/API RATES – NORTH CAROLINA PHYSICAL COLLOCATION

Rates marked with an asterisk (*) are interim and are subject to true-up.

USOC	Rate Element Description	Unit	Recurring Rate (RC)	Non-Recurring Rate (NRC)
PE1BA	Application Fee*	Per request	NA	$3,850.00
PE1CA	Subsequent Application Fee	Per request	NA	$3,119.00 Minimum
	Space Preparation Fees			
	Central Office Modification*	Per sq. ft.	$1.57	
	Common Systems Modification – Cageless*	Per sq. ft.	$3.26	
	Common Systems Modification – Caged*	Per cage	$110.79	
	Power*	Per nominal –48v DC Amp	$5.76	
	Space Enclosure (100 sq. ft. minimum)			
PE1BW	Welded Wire-mesh*	Per first 100 sq. ft.	$102.76	NA
PE1CW	Welded Wire-mesh*	Per add'l 50 sq. ft.	$10.44	NA
PE1PJ	Floor Space*	Per sq. ft.	$3.45	NA
PE1BD	Cable Installation*	Per cable	NA	$2,305.00
PE1PM	Cable Support Structure*	Per entrance cable	$21.33	NA
	Power			
PE1PL	-48V DC Power*	Per amp	$6.65	NA
PE1FB	120V AC Power single phase*	Per breaker amp	$5.50	-
PE1FD	240V AC Power single phase*	Per breaker amp	$11.01	-
PE1FE	120V AC Power three phase*	Per breaker amp	$16.51	-
PE1FG	277 AC Power three phase*	Per breaker amp	$38.12	-
	Cross Connects **(Note 1)**	Per cross connect		First/Add'l
PE1P2	2-wire*		$0.32	$41.78/$39.23
PE1P4	4-wire*		$0.64	$41.91/$39.25
PE1P1	DS-1*		$2.34	$71.02/$51.08
PE1P3	DS-3*		$42.84	$69.84/$49.43
PE1F2	2-fiber		$2.94	$51.97/$38.59
PE1F4	4-fiber		$5.62	$64.53/$51.15

NORTH CAROLINA (continued)				
USOC	**Rate Element Description**	**Unit**	**Recurring Rate (RC)**	**Non-Recurring Rate (NRC)**
PE1AX	Security Access System	Per premises	$41.03	
	Security System*			
PE1A1	New Access Card Activation*	Per card	$.062	$55.30
PE1AA	Administrative change, existing card*	Per card		$15.51
PE1AR	Replace lost or stolen card	Per card		$45.34
PE1AK	Initial Key	Per key	NA	$26.18
PE1AL	Replace lost or stolen key	Per key	NA	$26.18
PE1SR	Space Availability Report*	Per premises requested		$2,140.00
	POT Bay Arrangements	Per cross-connect		
	Prior to 6/1/99			
PE1PE	2-Wire Cross-Connect		$0.10	NA
PE1PF	4-Wire Cross-Connect		$0.19	NA
PE1PG	DS1 Cross-Connect		$0.79	NA
PE1PH	DS3 Cross-Connect		$4.85	NA
PE1B2	2 Fiber Cross-Connect		$45.30	NA
PE1B4	4 Fiber Cross-Connect		$61.09	NA
	Security Escort	Per half hr./Add'l half hr.		
PE1BT	Basic Time		NA	$42.92/$25.56
PE1OT	Overtime		NA	$54.51/$32.44
PE1PT	Premium Time		NA	$66.10/$39.32
	Cable Records[1]			**Note 2**
				Initial/subsequent
PE1CR	Cable Records	Per request	NA	$1707/$1165
PE1CD	VG/DS0 Cable	Per cable record	NA	$923.08/$923.08
PE1CO	VG/DS0 Cable	Per each 100 pair	NA	$18.02/$18.02
PE1C1	DS1	Per T1TIE	NA	$8.43/$8.43
PE1C3	DS3	Per T3TIE	NA	$29.51/$29.51
PE1CB	Fiber Cable	Per cable record	NA	$278.82/$278.82

EXHIBIT A: BELLSOUTH/API RATES – NORTH CAROLINA PHYSICAL COLLOCATION (continued)

Note(s):

N/A refers to rate elements which do not have a negotiated rate.

Note1: Cable records charges apply for work required to build cable records in company systems. The VG/DS0 per cable record charge is for a maximum of 3600 records. The Fiber cable record charge is for a maximum of 99 records.

Note 2: The initial charge applies when the cables are first installed and inventoried. The subsequent charge applies when additional cables are installed and inventoried at the same location.

EXHIBIT A: BELLSOUTH/API RATES – SOUTH CAROLINA PHYSICAL COLLOCATION

Rates marked with an asterisk (*) are interim and are subject to true-up.

USOC	Rate Element Description	Unit	Recurring Rate (RC)	Non-Recurring Rate (NRC)
PE1BA	Application Fee	Per request	NA	$3768.00
PE1CA	Subsequent Application Fee	Per request	NA	$3,141.00 Minimum
	Space Preparation Fees			
PE1SJ	Firm Order Processing*			$1,204.00
PE1SK	Central Office Modifications*	Per sq. ft.	$2.75	
PE1SL	Common Systems Modifications – Cageless*	Per sq. ft.	$3.24	
PE1SM	Common Systems Modifications – Caged*	Per cage	$110.17	
	Space Enclosure (100 sq. ft. minimum)			
PE1BW	Welded Wire-mesh	Per first 100 sq. ft.	$219.19	NA
PE1CW	Welded Wire-mesh	Per add'l 50 sq. ft.	$21.50	NA
PE1PJ	Floor Space	Per sq. ft.	$3.95	NA
PE1BD	Cable Installation	Per cable	NA	$1,621.00
PE1PM	Cable Support Structure	Per entrance cable	$21.33	NA
	Power			
PE1PL	-48V DC Power*	Per amp	$9.19	NA
PE1FB	120V AC Power single phase*	Per breaker amp	$5.67	-
PE1FD	240V AC Power single phase*	Per breaker amp	$11.36	-
PE1FE	120V AC Power three phase*	Per breaker amp	$17.03	-
PE1FG	277 AC Power three phase*	Per breaker amp	$39.33	-
	Cross Connects	Per cross connect		First/Add'l
PE1P2	2-wire		$.034	$33.75/$31.86
PE1P4	4-wire		$.068	$33.71/$31.75
PE1P1	DS-1		$1.12	$53.05/$39.96
PE1P3	DS-3		$14.21	$52.11/$38.68
PE1F2	2-fiber		$2.82	$52.11/$38.69
PE1F4	4-fiber		$5.01	$64.69/$51.26

SOUTH CAROLINA (continued)				
USOC	**Rate Element Description**	**Unit**	**Recurring Rate (RC)**	**Non-Recurring Rate (NRC)**
PE1AX	Security Access System	Per premises	$74.12	
	Security System*			
PE1A1	New Access Card Activation*	Per card	$.060	$55.70
PE1AA	Administrative change, existing card*	Per card		$15.62
PE1AR	Replace lost or stolen card	Per card		$45.66
PE1AK	Initial Key	Per key	NA	$26.25
PE1AL	Replace lost or stolen key	Per key	NA	$26.25
PE1SR	Space Availability Report*	Per premises requested		$2,155.00
	POT Bay Arrangements	Per cross-connect		
	Prior to 6/1/99			
PE1PE	2-Wire Cross-Connect		$0.1091	NA
PE1PF	4-Wire Cross-Connect		$0.2181	NA
PE1PG	DS1 Cross-Connect		$0.9004	NA
PE1PH	DS3 Cross-Connect		$5.64	NA
PE1B2	2 Fiber Cross-Connect		$37.36	NA
PE1B4	4 Fiber Cross-Connect		$50.38	NA
	Security Escort	Per half hr./Add'l half hr.		
PE1BT	Basic Time		NA	$33.92/$21.50
PE1OT	Overtime		NA	$44.19/$27.77
PE1PT	Premium Time		NA	$54.45/$34.04
	Cable Records[1]			**Note 2**
				Initial/subsequent
PE1CR	Cable Records	Per request	NA	$1712/$1168
PE1CD	VG/DS0 Cable	Per cable record	NA	$925.57/$925.57
PE1CO	VG/DS0 Cable	Per each 100 pair	NA	$18.06/$18.06
PE1C1	DS1	Per T1TIE	NA	$8.45/$8.45
PE1C3	DS3	Per T3TIE	NA	$29.59/$29.59
PE1CB	Fiber Cable	Per cable record	NA	$279.57/$279.57

EXHIBIT A: BELLSOUTH/API RATES – SOUTH CAROLINA PHYSICAL COLLOCATION (continued)

Note(s):

N/A refers to rate elements which do not have a negotiated rate.

Note1: Cable records charges apply for work required to build cable records in company systems. The VG/DS0 per cable record charge is for a maximum of 3600 records. The Fiber cable record charge is for a maximum of 99 records.

Note 2: The initial charge applies when the cables are first installed and inventoried. The subsequent charge applies when additional cables are installed and inventoried at the same location.

EXHIBIT A: BELLSOUTH/API RATES – TENNESSEE PHYSICAL COLLOCATION

*** Rates are interim and are subject to true-up.**

USOC	Rate Element Description	Unit	Recurring Rate (RC)	Non-Recurring Rate (NRC)
PE1BA	Application Fee	Per request	NA	$3,767.00
PE1CA	Subsequent Application Fee	Per request	NA	$3,140.00 Minimum
	Space Preparation Fees			
PE1SJ	Firm Order Processing*			$1,204.00
PE1SK	Central Office Modifications*	Per sq. ft.	$2.74	
PE1SL	Common Systems Modifications – Cageless*	Per sq. ft.	$2.95	
PE1SM	Common Systems Modifications – Caged*	Per cage	$100.14	
	Space Enclosure (100 sq. ft. minimum)			
PE1BW	Welded Wire-mesh	Per first 100 sq. ft.	$218.53	NA
PE1CW	Welded Wire-mesh	Per add'l 50 sq. ft.	$21.44	NA
PE1PJ	Floor Space	Per sq. ft.	$6.75	NA
PE1BD	Cable Installation	Per cable	NA	$1,757.00
PE1PM	Cable Support Structure	Per entrance cable	$19.80	NA
	Power			
PE1PL	-48V DC Power*	Per amp	$8.87	NA
PE1FB	120V AC Power single phase*	Per breaker amp	$5.60	-
PE1FD	240V AC Power single phase*	Per breaker amp	$11.22	-
PE1FE	120V AC Power three phase*	Per breaker amp	$16.82	-
PE1FG	277 AC Power three phase*	Per breaker amp	$38.84	-
	Cross Connects	Per cross connect		First/Add'l
PE1P2	2-wire		$0.033	$33.82/$31.92
PE1P4	4-wire		$0.066	$33.94/$31.95
PE1P1	DS-1		$1.51	$53.27/$40.16
PE1P3	DS-3		$19.26	$52.37/$38.89
PE1F2	2-fiber		$3.82	$52.37/$38.89
PE1F4	4-fiber		$6.79	$65.03/$51.55

TENNESSEE (continued)				
USOC	**Rate Element Description**	**Unit**	**Recurring Rate (RC)**	**Non-Recurring Rate (NRC)**
PE1AX	Security Access System	Per premises	$55.99	
	Security System			
PE1A1	New Access Card Activation	Per card	$.059	$55.67
PE1AA	Administrative change, existing card	Per card		$15.61
PE1AR	Replace lost or stolen card	Per card		$45.64
PE1AK	Initial Key	Per key	NA	$26.24
PE1AL	Replace lost or stolen key	Per key	NA	$26.24
PE1SR	Space Availability Report*	Per premises requested		$2,154.00
	POT Bay Arrangements	Per cross-connect		
	Prior to 6/1/99			
PE1PE	2-Wire Cross-Connect		$0.40	NA
PE1PF	4-Wire Cross-Connect		$1.20	NA
PE1PG	DS1 Cross-Connect		$1.20	NA
PE1PH	DS3 Cross-Connect		$8.00	NA
PE1B2	2 Fiber Cross-Connect		$38.79	NA
PE1B4	4 Fiber Cross-Connect		$52.31	NA
	Security Escort	Per half hr./Add'l half hr.		
PE1BT	Basic Time		NA	$33.91/$21.49
PE1OT	Overtime		NA	$44.17/$27.76
PE1PT	Premium Time		NA	$54.42/$34.02
	Cable Records[1]			**Note 2**
				Initial/subsequent
PE1CR	Cable Records	Per request	NA	$1711/$1168
PE1CD	VG/DS0 Cable	Per cable record	NA	$925.06/$925.06
PE1CO	VG/DS0 Cable	Per each 100 pair	NA	$18.05/$18.05
PE1C1	DS1	Per T1TIE	NA	$8.45/$8.45
PE1C3	DS3	Per T3TIE	NA	$29.57/$29.57
PE1CB	Fiber Cable	Per cable record	NA	$279.42/$279.42

Note(s):

N/A refers to rate elements which do not have a negotiated rate.

Note1: Cable records charges apply for work required to build cable records in company systems. The VG/DS0 per cable record charge is for a maximum of 3600 records. The Fiber cable record charge is for a maximum of 99 records.

Note 2: The initial charge applies when the cables are first installed and inventoried. The subsequent charge applies when additional cables are installed and inventoried at the same location.

EXHIBIT B

ENVIRONMENTAL AND SAFETY PRINCIPLES

The following principles provide basic guidance on environmental and safety issues when applying for and establishing Physical Collocation arrangements.

1. GENERAL PRINCIPLES

1.1 Compliance with Applicable Law. BellSouth and API agree to comply with applicable federal, state, and local environmental and safety laws and regulations including U.S. Environmental Protection Agency (USEPA) regulations issued under the Clean Air Act (CAA), Clean Water Act (CWA), Resource Conservation and Recovery Act (RCRA), Comprehensive Environmental Response, Compensation and Liability Act (CERCLA), Superfund Amendments and Reauthorization Act (SARA), the Toxic Substances Control Act (TSCA), and OSHA regulations issued under the Occupational Safety and Health Act of 1970, as amended and NFPA and National Electrical Codes (NEC) and the NESC ("Applicable Laws"). Each Party shall notify the other if compliance inspections are conducted by regulatory agencies and/or citations are issued that relate to any aspect of this Attachment.

1.2 Notice. BellSouth and API shall provide notice to the other, including Material Safety Data Sheets (MSDSs), of known and recognized physical hazards or Hazardous Chemicals existing on site or brought on site. Each Party is required to provide specific notice for known potential Imminent Danger conditions. API should contact 1-800-743-6737 for BellSouth MSDS sheets.

1.3 Practices/Procedures. BellSouth may make available additional environmental control procedures for API to follow when working at a BellSouth Premises (See Section 2, below). These practices/procedures will represent the regular work practices required to be followed by the employees and contractors of BellSouth for environmental protection. API will require its contractors, agents and others accessing the BellSouth Premises to comply with these practices. Section 2 lists the Environmental categories where BST practices should be followed by CLEC when operating in the BellSouth Premises.

1.4 Environmental and Safety Inspections. BellSouth reserves the right to inspect the API space with proper notification. BellSouth reserves the right to stop any API work operation that imposes Imminent Danger to the environment, employees or other persons in the area or Facility.

1.5 Hazardous Materials Brought On Site. Any hazardous materials brought into, used, stored or abandoned at the BellSouth Premises by API are owned by API. API will indemnify BellSouth for claims, lawsuits or damages to persons or property caused by these materials. Without prior written BellSouth approval, no substantial new safety or environmental hazards can be created by API or different hazardous materials used by API at BellSouth Facility. API must demonstrate adequate emergency response

capabilities for its materials used or remaining at the BellSouth Facility.

1.6 Spills and Releases. When contamination is discovered at a BellSouth Premises, the Party discovering the condition must notify BellSouth. All Spills or Releases of regulated materials will immediately be reported by API to BellSouth.

1.7 Coordinated Environmental Plans and Permits. BellSouth and API will coordinate plans, permits or information required to be submitted to government agencies, such as emergency response plans, spill prevention control and countermeasures (SPCC) plans and community reporting. If fees are associated with filing, BellSouth and API will develop a cost sharing procedure. If BellSouth's permit or EPA identification number must be used, API must comply with all of BellSouth's permit conditions and environmental processes, including environmental "best management practices (BMP)" (see Section 2, below) and/or selection of BST disposition vendors and disposal sites.

1.8 Environmental and Safety Indemnification. BellSouth and API shall indemnify, defend and hold harmless the other Party from and against any claims (including, without limitation, third-party claims for personal injury or death or real or personal property damage), judgments, damages, (including direct and indirect damages, and punitive damages), penalties, fines, forfeitures, costs, liabilities, interest and losses arising in connection with the violation or alleged violation of any Applicable Law or contractual obligation or the presence or alleged presence of contamination arising out of the acts or omissions of the indemnifying Party, its agents, contractors, or employees concerning its operations at the Facility.

2. CATEGORIES FOR CONSIDERATION OF ENVIRONMENTAL ISSUES

When performing functions that fall under the following Environmental categories on BellSouth's Premises, API agrees to comply with the applicable sections of the current issue of BellSouth's Environmental and Safety Methods and Procedures (M&Ps), incorporated herein by this reference. API further agrees to cooperate with BellSouth to ensure that API's employees, agents, and/or subcontractors are knowledgeable of and satisfy those provisions of BellSouth's Environmental M&Ps which apply to the specific Environmental function being performed by API, its employees, agents and/or subcontractors.

The most current version of reference documentation must be requested from BellSouth.

ENVIRONMENTAL CATEGORIES	ENVIRONMENTAL ISSUES	ADDRESSED BY THE FOLLOWING DOCUMENTATION
Disposal of hazardous material or other regulated material	Compliance with all applicable local, state, & federal laws and	• Std T&C 450 • Fact Sheet Series 17000

(e.g., batteries, fluorescent tubes, solvents & cleaning materials)	regulations Pollution liability insurance EVET approval of contractor	• Std T&C 660-3 • Approved Environmental Vendor List (Contact E/S Management)
Emergency response	Hazmat/waste release/spill firesafety emergency	• Fact Sheet Series 1700 • Building Emergency Operations Plan (EOP) (specific to and located on Premises)
Contract labor/outsourcing for services with environmental implications to be performed on BellSouth Premises (e.g., disposition of hazardous material/waste; maintenance of storage tanks)	Compliance with all applicable local, state, & federal laws and regulations Performance of services in accordance with BST's environmental M&Ps Insurance	• Std T&C 450 • Std T&C 450-B • (Contact E/S for copy of appropriate E/S M&Ps.) • Std T&C 660
Transportation of hazardous material	Compliance with all applicable local, state, & federal laws and regulations Pollution liability insurance EVET approval of contractor	• Std T&C 450 • Fact Sheet Series 17000 • Std T&C 660-3 • Approved Environmental Vendor List (Contact E/S Management)
Maintenance/operations work which may produce a waste Other maintenance work	Compliance with all application local, state, & federal laws and regulations Protection of BST employees and equipment	• Std T&C 450 • 29CFR 1910.147 (OSHA Standard) • 29CFR 1910 Subpart O (OSHA Standard)
Janitorial services	All waste removal and disposal must conform to all applicable federal, state and local regulations All Hazardous Material and Waste Asbestos notification and protection of employees and equipment	• P&SM Manager - Procurement • Fact Sheet Series 17000 • GU-BTEN-001BT, Chapter 3 • BSP 010-170-001BS (Hazcom)

Manhole cleaning	Compliance with all applicable local, state, & federal laws and regulations Pollution liability insurance EVET approval of contractor	• Std T&C 450 • Fact Sheet 14050 • BSP 620-145-011PR Issue A, August 1996 • Std T&C 660-3 • Approved Environmental Vendor List (Contact E/S Management)
Removing or disturbing building materials that may contain asbestos	Asbestos work practices	• GU-BTEN-001BT, Chapter 3

3. DEFINITIONS

Generator. Under RCRA, the person whose act produces a Hazardous Waste, as defined in 40 CFR 261, or whose act first causes a Hazardous Waste to become subject to regulation. The Generator is legally responsible for the proper management and disposal of Hazardous Wastes in accordance with regulations.

Hazardous Chemical. As defined in the U.S. Occupational Safety and Health (OSHA) hazard communication standard (29 CFR 1910.1200), any chemical which is a health hazard or physical hazard.

Hazardous Waste. As defined in section 1004 of RCRA.

Imminent Danger. Any conditions or practices at a facility which are such that a danger exists which could reasonably be expected to cause immediate death or serious harm to people or immediate significant damage to the environment or natural resources.

Spill or Release. As defined in Section 101 of CERCLA.

4. ACRONYMS

E/S – Environmental/Safety

EVET - Environmental Vendor Evaluation Team

DEC/LDEC - Department Environmental Coordinator/Local Department Environmental Coordinator

GU-BTEN-001BT - BellSouth Environmental Methods and Procedures

NESC - National Electrical Safety Codes

P&SM - Property & Services Management

Std. T&C - Standard Terms & Conditions

Remote Site Physical Collocation

BELLSOUTH

REMOTE SITE PHYSICAL COLLOCATION

1. Scope of Attachment

1.1 Scope of Attachment. The rates, terms, and conditions contained within this Attachment shall only apply when API is occupying the Remote Collocation Space as a sole occupant or as a Host within a Remote Site Location pursuant to Section 4.

All the negotiated rates, terms and conditions set forth in this Attachment pertain to Remote Site Collocation and the provisioning of Remote Collocation Space.

1.2 Right to occupy. BellSouth shall offer to API Remote Site Collocation on rates, terms, and conditions that are just, reasonable, non-discriminatory and consistent with the rules of the Federal Communications Commission ("FCC"). Subject to the rates, terms, and conditions of this Attachment, BellSouth hereby grants to API a right to occupy that certain area designated by BellSouth within a BellSouth Remote Site Location, of a size which is specified by API and agreed to by BellSouth (hereinafter "Remote Collocation Space"). BellSouth Remote Site Locations include cabinets, huts, and controlled environmental vaults owned or leased by BellSouth that house BellSouth Network Facilities. To the extent this Attachment does not include all the necessary rates, terms and conditions for other BellSouth remote locations other than cabinets, huts and controlled environmental vaults, the Parties will negotiate said rates, terms, and conditions at the request for Remote Site collocation at BellSouth remote locations other than those specified above.

1.2.1 In all states other than Florida, the size specified by API may contemplate a request for space sufficient to accommodate API's growth within a two year period. Neither BellSouth nor any of BellSouth's affiliates may reserve space for future use on more preferential terms than those set forth above.

1.2.2 In the state of Florida, the size specified by API may contemplate a request for space sufficient to accommodate API's growth within an eighteen (18) month period.

1.3 Third Party Property. If the Premises, or the property on which it is located, is leased by BellSouth from a Third Party or otherwise controlled by a Third Party, special considerations and intervals may apply in addition to the terms and conditions of this Agreement. Additionally, where BellSouth notifies API that BellSouth's agreement with a Third Party does not grant BellSouth the ability to provide access and use rights to others, upon API's request, BellSouth will use its best efforts to obtain the owner's consent and to otherwise secure such rights for API. API agrees to reimburse BellSouth for the reasonable and demonstrable costs incurred by BellSouth in obtaining such rights for API. In cases where a Third Party agreement does not grant BellSouth the right to provide access and use rights to others as contemplated by this Agreement and BellSouth, despite its best efforts, is unable to secure such access and use rights for API as above, API shall be responsible for obtaining such permission to access and use such property . BellSouth shall cooperate with API in obtaining such permission.

1.4 Space Reclamation. In the event of space exhaust within a Remote Site Location, BellSouth may include in its documentation for the Petition for Waiver filing any vacant space in the Remote Site Location. API will be responsible for any justification of vacant space within its Remote Collocation Space, if such justification is required by the appropriate state commission.

1.5 Use of Space. API shall use the Remote Collocation Space for the purposes of installing, maintaining and operating API's equipment (to include testing and monitoring equipment) necessary, for interconnection with BellSouth services and facilities, including access to unbundled network elements, for the provision of telecommunications services. The Remote Collocation Space may be used for no other purposes except as specifically described herein or authorized in writing by BellSouth.

1.6 Rates and charges. API agrees to pay the rates and charges identified in Exhibit A attached hereto.

1.7 Due Dates. In all states except Georgia, if any due date contained in this Attachment falls on a weekend or holiday, then the due date will be the next business day thereafter.

2. Space Notification

2.1 Availability of Space. Upon submission of an Application pursuant to Section 6, BellSouth will permit API to physically collocate, pursuant to the terms of this Attachment, at any BellSouth Remote Site Location, unless BellSouth has determined that there is no space available due to space limitations or

that Remote Site collocation is not practical for technical reasons. In the event space is not immediately available at a Remote Site Location, BellSouth reserves the right to make additional space available, in which case the conditions in Section 6.5 shall apply, or BellSouth may elect to deny space in accordance with this section in which case virtual or adjacent collocation options may be available. If the amount of space requested is not available, BellSouth will notify API of the amount that is available.

2.2 Availability Notification. Unless otherwise specified, BellSouth will respond to an application within ten (10) calendar days as to whether space is available or not available within a BellSouth Remote Site Location. This interval excludes National Holidays. If the amount of space requested is not available, BellSouth will notify API of the amount of space that is available.

2.2.1 BellSouth will respond to a Florida Application within fifteen (15) calendar days as to whether space is available or not available within a BellSouth Remote Site Location. If the amount of space requested is not available, BellSouth will notify API of the amount that is available.

2.2.2 BellSouth will respond to a Louisiana Application within ten (10) calendar days for space availability for one (1) to ten (10) Applications; fifteen (15) calendar days for eleven (11) to twenty (20) Applications; and for more than twenty (20) Applications, it is increased by five (5) calendar days for every five additional Applications received within five (5) business days. If the amount of space requested is not available, BellSouth will notify API of the amount of space that is available.

2.2.3 BellSouth will respond to a Mississippi Application within ten (10) business days as to whether space is available or not available within a BellSouth Premises. If the amount of space requested is not available, BellSouth will notify API of the amount of space that is available.

2.3 Reporting. Upon request from API, BellSouth will provide a written report ("Space Availability Report") specifying the amount of Remote Collocation Space available at the Remote Site Location requested, the number of collocators present at the Remote Site Location, any modifications in the use of the space since the last report on the Remote Site Location requested and the measures BellSouth is taking to make additional space available for collocation arrangements.

2.3.1 The request from API for a Space Availability Report must be written and must include the Common Language Location Identification ("CLLI")code for both the Remote Site Location and the serving central office. Such information regarding the CLLI code for the serving central offices located in

the National Exchange Carriers Association (NECA) Tariff FCC No. 4. If API is unable to obtain the CLLI code, from for example a site visit to the remote site, API may request the CLLI code from BellSouth. To obtain a CLLI code for a remote site directly from BellSouth, API should submit to BellSouth a Remote Site Interconnection Request for Remote Site CLLI Code prior to submitting its request for a Space Availability Report. API should complete all the requested information and submit the Request with the applicable fee to BellSouth.

2.3.2 BellSouth will respond to a request for a Space Availability Report for a particular Remote Site Location within ten (10) calendar days of receipt of such request. This interval excludes national holidays. BellSouth will make best efforts to respond in ten (10) calendar days to such a request when the request includes from two (2) to five (5) Remote Site Locations within the same state. The response time for requests of more than five (5) Remote Site Locations shall be negotiated between the Parties. If BellSouth cannot meet the ten calendar day response time, BellSouth shall notify API and inform API of the time frame under which it can respond.

2.3.3 In Mississippi, BellSouth will respond to a request for a Space Availability Report for a particular Remote Site Location within ten (10) business days of receipt of such request. BellSouth will make best efforts to respond in ten (10) business days to such a request when the request includes from two (2) to five (5) Remote Site Locations within the same state. The response time for requests of more than five (5) Remote Site Locations shall be negotiated between the Parties. If BellSouth cannot meet the ten business day response time, BellSouth shall notify API and inform API of the time frame under which it can respond.

2.4 Denial of Application. After notifying API that BellSouth has no available space in the requested Remote Site Location ("Denial of Application"), BellSouth will allow API, upon request, to tour the Remote Site Location within ten (10) calendar days of such Denial of Application. This interval excludes national holidays. In order to schedule said tour within ten (10) calendar days, the request for a tour of the Remote Site Location must be received by BellSouth within five (5) calendar days of the Denial of Application.

2.4.1 Denial of Application. In Mississippi, after notifying API that BellSouth has no available space in the requested Premises ("Denial of Application"), BellSouth will allow API, upon request, to tour the Remote Site Location within ten (10) business days of such Denial of Application. In order to schedule said tour within ten (10) business days, the request for a tour of the Remote Site

Location must be received by BellSouth within five (5) business days of the Denial of Application.

2.5 Filing of Petition for Waiver. Upon Denial of Application BellSouth will timely file a petition with the Commission pursuant to 47 U.S.C. § 251(c)(6). BellSouth shall provide to the Commission any information requested by that Commission. Such information shall include which space, if any, BellSouth or any of BellSouth's affiliates have reserved for future use and a detailed description of the specific future uses for which the space has been reserved. Subject to an appropriate nondisclosure agreement or provision, BellSouth shall permit API to inspect any plans or diagrams that BellSouth provides to the Commission.

2.6 Waiting List. Unless otherwise specified, on a first-come, first-served basis governed by the date of receipt of an Application or Letter of Intent, BellSouth will maintain a waiting list of requesting carriers who have either received a Denial of Application or, where it is publicly known that the Remote Site Location is out of space, have submitted a Letter of Intent to collocate. BellSouth will notify the telecommunications carriers on the waiting list when space becomes available according to how much space becomes available and the position of telecommunications carrier on said waiting list. API must submit an updated, complete, and correct Application to BellSouth within 30 calendar days (in Mississippi, 30 business days) or notify BellSouth in writing that API wants to maintain its place on the waiting list either without accepting such space or accepting an amount of space less than its original request. If API does not submit such an Application or notify BellSouth in writing as described above, BellSouth will offer such space to the next CLEC on the waiting list and remove API from the waiting list. Upon request, BellSouth will advise API as to its position on the list.

2.6.1 In Florida, on a first-come, first-served basis governed by the date of receipt of an Application or Letter of Intent, BellSouth will maintain a waiting list of requesting carriers who have either received a Denial of Application or, where it is publicly known that the Remote Site Location is out of space, have submitted a Letter of Intent to collocate. Sixty (60) days prior to space becoming available, if known, BellSouth will notify the Florida PSC and the telecommunications carriers on the waiting list by mail when space becomes available according to the position of telecommunications carrier on said waiting list. If not known sixty (60) days in advance, BellSouth shall notify the Florida PSC and the telecommunications carriers on the waiting list within two days of the determination that space is available.

2.7 Public Notification. BellSouth will maintain on its Interconnection Services website a notification document that will indicate all Remote Site Locations

that are without available space. BellSouth shall update such document within ten (10) calendar days (in Mississippi, 10 business days)of the Denial of Application date. This interval excludes national holidays. BellSouth will also post a document on its Interconnection Services website that contains a general notice where space has become available in a Remote Site Location previously on the space exhaust list. BellSouth shall allocate said available space pursuant to the waiting list referenced in Section 2.6.

2.8 Regulatory Agency Procedures. Notwithstanding the foregoing, should any state or federal regulatory agency impose procedures or intervals different than procedures or intervals set forth in this section applicable to API, whether now in effect or that become effective after execution of this Agreement, those procedures or intervals shall supersede the requirements set forth herein for all Applications submitted for the first time after the effective date thereof for that jurisdiction.

3. Collocation Options

3.1 Compliance. The parties agree to comply with all applicable federal, state, county, local and administrative laws, orders, rules, ordinances, regulations, and codes in the performance of their obligations hereunder.

3.2 Cageless. BellSouth shall allow API to collocate API's equipment and facilities without requiring the construction of a cage or similar structure. BellSouth shall allow API to have direct access to its equipment and facilities. BellSouth shall make cageless collocation available in single rack/bay increments pursuant to Section 6. For equipment requiring special technical considerations, API must provide the equipment layout, including spatial dimensions for such equipment pursuant to generic requirements contained in BellCore (Telcordia) GR-63-Core and shall be responsible for constructing all special technical requirements associated with such equipment pursuant to Section 6.8 following. Subject to space availability and technical feasibility, at API's option, API may enclose its equipment.

3.3 Shared (Subleased) Collocation. API may allow other telecommunications carriers to share API's Remote Site collocation arrangement pursuant to terms and conditions agreed to by API ("Host") and other telecommunications carriers ("Guests") and pursuant to this section, except where the BellSouth Remote Site Location is located within a leased space and BellSouth is prohibited by said lease from offering such an option or is located on property for which BellSouth holds an easement and such easement does not permit such an option. API shall notify BellSouth in writing upon execution of any agreement between the Host and its Guest within ten (10) calendar days (in Mississippi, 10 business days) of its execution and prior to any Firm Order.

Further, such notice shall include the name of the Guest(s) and the term of the agreement, and shall contain a certification by API that said agreement imposes upon the Guest(s) the same terms and conditions for Remote Collocation Space as set forth in this Attachment between BellSouth and API.

3.3.1 API shall be the sole interface and responsible Party to BellSouth for assessment of rates and charges contained within this Attachment; and for the purposes of ensuring that the safety and security requirements of this Attachment are fully complied with by the Guest, its employees and agents. In all states other than Florida, and in addition to the foregoing, API shall be the responsible party to BellSouth for the purpose of submitting Applications for initial and additional equipment placement of Guest. In the event the Host and Guest jointly submit an Application, only one Application Fee will be assessed. A separate Guest Application shall require the assessment of an Application Fee, as set forth in Exhibit A. Notwithstanding the foregoing, Guest may arrange directly with BellSouth for the provision of the interconnecting facilities between BellSouth and Guest and for the provision of the services and access to unbundled network elements.

3.3.2 API shall indemnify and hold harmless BellSouth from any and all claims, actions, causes of action, of whatever kind or nature arising out of the presence of API's Guests in the Remote Collocation Space except to the extent caused by BellSouth's sole negligence, gross negligence, or willful misconduct.

3.4 Adjacent Collocation. BellSouth will provide approval for adjacent Remote Site collocation arrangements ("Remote Site Adjacent Arrangement") where space within the Remote Site Location is legitimately exhausted, subject to technical feasibility, where the Remote Site Adjacent Arrangement does not interfere with access to existing or planned structures or facilities on the Remote Site Location property and where permitted by zoning and other applicable state and local regulations. The Remote Site Adjacent Arrangement shall be constructed or procured by API and in conformance with BellSouth's design and construction specifications. Further, API shall construct, procure, maintain and operate said Remote Site Adjacent Arrangement(s) pursuant to all of the terms and conditions set forth in this Attachment. Rates shall be negotiated at the time of the request for the Remote Site Adjacent Arrangement.

3.4.2 Should API elect such an option, API must arrange with a BellSouth Certified Contractor to construct a Remote Site Adjacent Arrangement structure in accordance with BellSouth's guidelines and specifications. BellSouth will provide guidelines and specifications upon request. Where local building codes require enclosure specifications more stringent than BellSouth's

standard specification, API and API's BellSouth Certified Contractor must comply with local building code requirements. API's BellSouth Certified Contractor shall be responsible for filing and receiving any and all necessary zoning, permits and/or licenses for such construction. API's BellSouth Certified Contractor shall bill API directly for all work performed for API pursuant to this Attachment and BellSouth shall have no liability for nor responsibility to pay such charges imposed by the BellSouth Certified Contractor. API must provide the local BellSouth Remote Site Location contact with two cards, keys or other access device used to enter the locked enclosure. Except in cases of emergency, BellSouth shall not access API's locked enclosure prior to notifying API.

3.4.3 BellSouth maintains the right to review API's plans and specifications prior to construction of a Remote Site Adjacent Arrangement(s). BellSouth shall complete its review within fifteen (15) calendar days. BellSouth may inspect the Remote Site Adjacent Arrangement(s) following construction and prior to the Commencement Date, as defined in Section 4.1 following, to ensure the design and construction comply with BellSouth's guidelines and specifications. BellSouth may require API, at API's sole cost, to correct any deviations from BellSouth's guidelines and specifications found during such inspection(s), up to and including removal of the Remote Site Adjacent Arrangement, within seven (7) calendar days of BellSouth's inspection, unless the Parties mutually agree to an alternative time frame.

3.4.4 API shall provide a concrete pad, the structure housing the arrangement, heating/ventilation/air conditioning ("HVAC"), lighting, and all facilities that connect the structure (i.e. racking, conduits, etc.) to the BellSouth point of demarcation. At API's option, and where the local authority having jurisdiction permits, BellSouth shall provide an AC power source and access to physical collocation services and facilities subject to the same nondiscriminatory requirements as applicable to any other physical collocation arrangement. API's BellSouth Certified Contractor shall be responsible for filing and receiving any and all necessary zoning, permits and/or licenses for such arrangement.

3.4.5 BellSouth shall allow Shared (Subleased) Caged Collocation within a Remote Site Adjacent Arrangement pursuant to the terms and conditions set forth in Section 3.3 preceding.

4. Occupancy

4.1 Commencement Date. The "Commencement Date" shall be the day API"'s equipment becomes operational as described in Article 4.2, following.

4.2 Occupancy. BellSouth will notify API in writing that the Remote Collocation Space is ready for occupancy. API must notify BellSouth in writing that collocation equipment installation is complete and is operational with BellSouth's network. BellSouth may, at its option, not accept orders for interconnected service until receipt of such notice. For purposes of this paragraph, API's telecommunications equipment will be deemed operational when connected to BellSouth's network for the purpose of service provision.

4.3 Termination. Except where otherwise agreed to by the Parties, API may terminate occupancy in a particular Remote Collocation Space upon thirty (30) calendar days prior written notice to BellSouth. Upon termination of such occupancy, API at its expense shall remove its equipment and other property from the Remote Collocation Space. API shall have thirty (30) calendar days from the termination date to complete such removal, including the removal of all equipment and facilities of API's Guests; provided, however, that API shall continue payment of monthly fees to BellSouth until such date as API has fully vacated the Remote Collocation Space. Should API or API's Guest fail to vacate the Remote Collocation Space within thirty (30) calendar days from the termination date, BellSouth shall have the right to remove the equipment and other property of API or API's Guest at API's expense and with no liability for damage or injury to API or API's Guest's property unless caused by the gross negligence or intentional misconduct of BellSouth. Upon termination of occupancy with respect to a Remote Collocation Space, API shall surrender such Remote Collocation Space to BellSouth in the same condition as when first occupied by the API except for ordinary wear and tear unless otherwise agreed to by the Parties. API shall be responsible for the cost of removing any enclosure, together with all support structures (e.g., racking, conduits), of a Remote Site Adjacent Arrangement at the termination of occupancy and restoring the grounds to their original condition.

5. Use of Remote Collocation Space

5.1 Equipment Type. BellSouth permits the collocation of any type of equipment necessary for interconnection to BellSouth's network or for access to unbundled network elements in the provision of telecommunications services.

5.1.1 Such equipment must at a minimum meet the following BellCore (Telcordia) Network Equipment Building Systems (NEBS) General Equipment Requirements: Criteria Level 1 requirements as outlined in the BellCore (Telcordia) Special Report SR-3580, Issue 1; equipment design spatial requirements per GR-63-CORE, Section 2; thermal heat dissipation per GR-063-CORE, Section 4, Criteria 77-79; acoustic noise per GR-063-CORE, Section 4, Criterion 128, and National Electric Code standards. . Except where otherwise required by a Commission, BellSouth shall comply with the

applicable FCC rules relating to denial of collocation based on API's failure to comply with this section.

5.1.2 API shall not use the Remote Collocation Space for marketing purposes nor shall it place any identifying signs or markings in the area surrounding the Remote Collocation Space or on the grounds of the Remote Site Location.

5.1.3 API shall place a plaque or other identification affixed to API's equipment necessary to identify API's equipment, including a list of emergency contacts with telephone numbers.

5.1.4 All API equipment installation shall comply with BellSouth TR 73503-11, Section 8, "Grounding - Engineering Procedures." Metallic cable sheaths and metallic strength members of optical fiber cables as well as the metallic cable sheaths of all copper conductor cables shall be bonded to the designated grounding bus for the remote collocation site. All copper conductor pairs, working and non-working, shall be equipped with a solid state protector unit (over-voltage protection only) which has been listed by a nationally recognized testing laboratory.

5.2 Entrance Facilities. API may elect to place API-owned or API-leased entrance facilities into the Remote Collocation Space from API's point of presence. BellSouth will designate the point of interconnection at the Remote Site Location housing the Remote Collocation Space which is physically accessible by both Parties. API will provide and place copper cable through conduit from the Remote Collocation Space to the Feeder Distribution Interface to the splice location of sufficient length for splicing by BellSouth. API must contact BellSouth for instructions prior to placing the entrance facility cable . API is responsible for maintenance of the entrance facilities.

5.2.1 Shared Use. API may utilize spare capacity on an existing interconnector entrance facility for the purpose of providing an entrance facility to another API collocation arrangement within the same BellSouth Remote Site Location.

5.3 Demarcation Point. BellSouth will designate the point(s) of demarcation between API's equipment and/or network and BellSouth's network. Each Party will be responsible for maintenance and operation of all equipment/facilities on its side of the demarcation point. API or its agent must perform all required maintenance to API equipment/facilities on its side of the demarcation point, pursuant to Section 5.8, following

5.4 API's Equipment and Facilities. API, or if required by this Attachment, API's BellSouth Certified Supplier, is solely responsible for the design, engineering, installation, testing, provisioning, performance, monitoring, maintenance and repair of the equipment and facilities used by API.

5.5 BellSouth's Access to Remote Collocation Space. BellSouth retains the right to access the Remote Collocation Space for the purpose of making BellSouth equipment and Remote Site Location modifications

5.6 Access. Pursuant to Section 11, API shall have access to the Remote Collocation Space twenty-four (24) hours a day, seven (7) days a week. API agrees to provide the name and social security number or date of birth or driver's license number of each employee, contractor, or agents of API or API's Guests provided with access keys or devices ("Access Keys") prior to the issuance of said Access Keys. Key acknowledgement forms must be signed by API and returned to BellSouth Access Management within 15 calendar days of API's receipt. Failure to return properly acknowledged forms will result in the holding of subsequent requests until acknowledgements are current. Access Keys shall not be duplicated under any circumstances. API agrees to be responsible for all Access Keys and for the return of all said Access Keys in the possession of API employees, contractors, Guests, or agents after termination of the employment relationship, contractual obligation with API or upon the termination of this Attachment or the termination of occupancy of an individual Remote Site collocation arrangement.

5.7 Lost or Stolen Access Keys. API shall notify BellSouth in writing immediately in the case of lost or stolen Access Keys. Should it become necessary for BellSouth to re-key Remote Site Locations as a result of a lost Access Key(s) or for failure to return an Access Key(s), API shall pay for all reasonable costs associated with the re-keying.

5.8 Interference or Impairment. Notwithstanding any other provisions of this Attachment, equipment and facilities placed in the Remote Collocation Space shall not significantly degrade, interfere with or impair service provided by BellSouth or by any other interconnector located in the Remote Site Location; shall not endanger or damage the facilities of BellSouth or of any other interconnector, the Remote Collocation Space, or the Remote Site Location; shall not compromise the privacy of any communications carried in, from, or through the Remote Site Location; and shall not create an unreasonable risk of injury or death to any individual or to the public. If BellSouth reasonably determines that any equipment or facilities of API violates the provisions of this paragraph, BellSouth shall give written notice to API, which notice shall direct API to cure the violation within forty-eight (48) hours of API's actual

receipt of written notice or, at a minimum, to commence curative measures within 24 hours and to exercise reasonable diligence to complete such measures as soon as possible thereafter. After receipt of the notice, the Parties agree to consult immediately and, if necessary, to inspect the arrangement. Except in the case of the deployment of an advanced service which significantly degrades the performance of other advanced services or traditional voice band services, if API fails to take curative action within 48 hours or if the violation is of a character which poses an immediate and substantial threat of damage to property, injury or death to any person, or other interference/impairment of the services provided by BellSouth or any other interconnector, then and only in that event BellSouth may take such action as it deems appropriate to correct the violation, including without limitation the interruption of electrical power to API's equipment. BellSouth will endeavor, but is not required, to provide notice to API prior to taking such action and shall have no liability to API for any damages arising from such action, except to the extent that such action by BellSouth constitutes willful misconduct. For purposes of this section, the term significantly degrade shall mean an action that noticeably impairs a service from a user's perspective. In the case of the deployment of an advanced service which significantly degrades the performance of other advanced services or traditional voice band services and API fails to take curative action within 48 hours then BellSouth will establish before the relevant Commission that the technology deployment is causing the significant degradation. Any claims of network harm presented to API or, if subsequently necessary, the relevant Commission, must be supported with specific and verifiable information. Where BellSouth demonstrates that a deployed technology is significantly degrading the performance of other advanced services or traditional voice band services, API shall discontinue deployment of that technology and migrate its customers to technologies that will not significantly degrade the performance of other such services. Where the only degraded service itself is a known disturber, and the newly deployed technology satisfies at least one of the criteria for a presumption that is acceptable for deployment under 47 C.F.R. 51.230, the degraded service shall not prevail against the newly-deployed technology.

5.9 Presence of Facilities. Facilities and equipment placed by API in the Remote Collocation Space shall not become a part of the Remote Site Location, even if nailed, screwed or otherwise fastened to the Remote Collocation Space but shall retain its status as personality and may be removed by API at any time. Any damage caused to the Remote Collocation Space by API's employees, agents or representatives shall be promptly repaired by API at its expense.

5.10 Alterations. In no case shall API or any person acting on behalf of API make any rearrangement, modification, improvement, addition, repair, or other

alteration which could affect in any way space, power, HVAC, and/or safety considerations to the Remote Collocation Space or the BellSouth Remote Site Location without the written consent of BellSouth, which consent shall not be unreasonably withheld. The cost of any such specialized alterations shall be paid by API. Any material rearrangement, modification, improvement, addition, repair, or other alteration shall require an Application Fee, pursuant to sub-section 6.2.

5.11 Upkeep of Remote Collocation Space. API shall be responsible for the general upkeep and cleaning of the Remote Collocation Space. API shall be responsible for removing any API debris from the Remote Collocation Space and from in and around the Remote Collocation Site on each visit.

6. Ordering and Preparation of Remote Collocation Space

6.1 State or Federal Regulatory agency impose procedures or intervals. Should any state or federal regulatory agency impose procedures or intervals different than procedures or intervals set forth in this section applicable to API, whether now in effect or that become effective after execution of this Agreement, those procedures or intervals shall supersede the requirements set forth herein for all applications submitted for the first time after the effective date thereof for that jurisdiction.

6.2 Application for Space. API shall submit a Remote Site Collocation Application when API or API's Guest(s), as defined in Section 3.3, desires to request or modify the use of the Remote Collocation Space.

6.3 Initial Application. For API or API's Guest(s) equipment placement, API shall submit to BellSouth an Application. The Application is Bona Fide when it is complete and accurate, meaning that all required fields on the Application are completed with the appropriate type of information. The Bona Fide Application shall contain a detailed description and schematic drawing of the equipment to be placed in API's Remote Collocation Space(s) in addition to the CLLI code applicable to that location. Prior to submitting the application, CLLI information can be obtained in the manner set forth in Section 2.3.1.

6.4 Application Fee. BellSouth will assess an Application Fee on a service order which shall be issued at the time BellSouth responds that space is available pursuant to Section 2. Payment of the Application Fee will be due as dictated by API's current billing cycle and is non-refundable.

6.5 Application Response. In Alabama, North Carolina, and Tennessee, In addition to the notice of space availability pursuant to Section 2, BellSouth will respond within ten (10) calendar days of receipt of an Application stating

whether the Application is Bona Fide, and if it is not Bona Fide, the items necessary to cause the Application to become Bona Fide. Sufficient detail will be provided to permit API a reasonable opportunity to correct each deficiency. API must correct any deficiencies in its Application and resubmit a Bona Fide Application within ten (10) calendar days of being notified of the deficiencies in the original Application. If API fails to resubmit its Application as Bona Fide within this ten (10) day period, API will lose its place in the collocation queue. This interval excludes national holidays. When space has been determined to be available, BellSouth will provide a written response ("Application Response"), which will include the configuration of the space and an estimate of the interval to provide the Remote Collocation Space.

6.5.1 Application Response. Except as otherwise provided, for all States that have ordered provisioning intervals but not application response intervals, the following will apply. In addition to the notice of space availability pursuant to Section 2, BellSouth will respond as to whether the Application is Bona Fide, and if it is not Bona Fide, the items necessary to cause the Application to become Bona Fide. When space has been determined to be available, BellSouth will provide a written response ("Application Response") within thirty (30) calendar days of receipt of a Bona Fide Application. When multiple applications are submitted in a state within a fifteen (15) calendar day window, BellSouth will respond to the Bona Fide Applications as soon as possible, but no later than the following: within thirty (30) calendar days for Bona Fide Applications 1-5; within thirty-six (36) calendar days for Bona Fide Applications 6-10; within forty-two (42) calendar days for Bona Fide Applications 11-15. Response intervals for multiple Bona Fide Applications submitted within the same timeframe for the same state in excess of 15 must be negotiated. All negotiations shall consider the total volume from all requests from telecommunications companies for collocation.

6.5.2 Application Response (Florida). Within fifteen (15) calendar days of receipt of a Bona Fide Application, BellSouth will respond as to whether space is available or not available within a particular Remote Site Location. Additionally, when space has been determined to be available or when a lesser amount of space than that requested is available, then with respect to the space available, BellSouth will provide a written response ("Application Response") including sufficient information to enable API to place a Firm Order. When API submits ten (10) or more Applications within ten (10) calendar days, the initial fifteen (15) day response period will increase by ten (10) days for every additional ten (10) Applications or fraction thereof.

6.5.3 Application Response (Georgia) In addition to the notice of space availability pursuant to Section 2.1, BellSouth will respond as to whether the Application is Bona Fide, and if it is not Bona Fide, the items necessary to cause the

Application to become Bona Fide. When space has been determined to be available for caged or cageless arrangements, BellSouth will provide a written response ("Application Response") within thirty (30) calendar days of receipt of a Bona Fide Application. The Application Response will include, at a minimum, the configuration of the space, the Cable Installation Fee, Cable Records Fee, and the space preparation fees, as described in Section 7.

6.5.4 Application Response (Louisiana). In addition to the notice of space availability pursuant to Section 2, BellSouth will respond as to whether the Application is Bona Fide, and if it is not Bona Fide, the items necessary to cause the Application to become Bona Fide. BellSouth will respond as to whether space is available or not available within a particular Remote Site Location in accordance with Section 2. BellSouth will respond with a full Application Response within 30 calendar days for one to ten Applications; 35 calendar days for eleven to twenty Applications; and for requests of more than twenty Application it is increased by five calendar days for every five Applications received within five business days.

6.5.5 Application Response (Mississippi) In addition to the notice of space availability pursuant to Section 2, BellSouth will respond as to whether the Application is Bona Fide, and if it is not Bona Fide, the items necessary to cause the Application to become Bona Fide. When space has been determined to be available, BellSouth will provide a written response ("Application Response") within thirty (30) business days of receipt of a Bona Fide Application. When multiple applications are submitted in a state within a fifteen (15) business day window, BellSouth will respond to the Bona Fide Applications as soon as possible, but no later than the following: within thirty (30) business days for Bona Fide Applications 1-5; within thirty-six (36) business days for Bona Fide Applications 6-10; within forty-two (42) business days for Bona Fide Applications 11-15. Response intervals for multiple Bona Fide Applications submitted within the same timeframe for the same state in excess of 15 must be negotiated. All negotiations shall consider the total volume from all requests from telecommunications companies for collocation.

6.5.6 Application Response (Kentucky) In addition to the notice of space availability pursuant to Section 2, BellSouth will respond as to whether the Application is Bona Fide, and if it is not Bona Fide, the items necessary to cause the Application to become Bona Fide. When space has been determined to be available, BellSouth will provide a written response ("Application Response") within thirty (30) calendar days of receipt of a Bona Fide Application. When multiple applications are submitted in a state within a fifteen (15) calendar day window, BellSouth will respond to the Bona Fide Applications as soon as possible, but no later than the following: within thirty (30) calendar days for Bona Fide Applications 1-5; within thirty-six (36)

calendar days for Bona Fide Applications 6-10; within forty-two (42) calendar days for Bona Fide Applications 11-15. Response intervals for multiple Bona Fide Applications submitted within the same timeframe for the same state in excess of 15 must be negotiated. All negotiations shall consider the total volume from all requests from telecommunications companies for collocation.

6.6 Application Modifications. In Alabama, North Carolina, and Tennessee, if a modification or revision is made to any information in the Bona Fide Application for Remote Site Collocation or the Bona Fide Application for Adjacent Remote Site Collocation, with the exception of modifications to Customer Information, Contact Information or Billing Contact Information, either at the request of API or necessitated by technical considerations, said Application shall be considered a new Application and shall be handled as a new Application for purposes of the provisioning interval, and BellSouth shall charge API a Subsequent Application Fee. Major changes, such as requesting additional space or adding equipment may require API to submit the Application with an Application Fee.

6.6.1 Application Modifications. For all States that have ordered provisioning intervals but not application response intervals, and except as otherwise specified, the following will apply. If a modification or revision is made to any information in the Bona Fide Application for Remote Site Collocation or the Bona Fide Application for Adjacent Remote Site Collocation, with the exception of modifications to Customer Information, Contact Information or Billing Contact Information, either at the request of API or necessitated by technical considerations, BellSouth will respond to the Bona Fide Application within thirty (30) calendar days after BellSouth receives such revised application or at such other date as the Parties agree. If, at any time, BellSouth needs to reevaluate API's Bona Fide Application as a result of changes requested by API to API's original application, then BellSouth will charge API a Subsequent Application Fee. Major changes such as requesting additional space or adding additional equipment may require API to resubmit the Application with an Application Fee.

6.6.2 Application Modifications (Florida). If a modification or revision is made to any information in the Bona Fide Application for Remote Site Collocation or the Bona Fide Application for Adjacent Remote Site Collocation, with the exception of modifications to Customer Information, Contact Information or Billing Contact Information, either at the request of API or necessitated by technical considerations, BellSouth will respond to the Bona Fide Application within fifteen (15) calendar days after BellSouth receives such revised Application or at such other date as the Parties agree. If, at any time, BellSouth needs to reevaluate API's Bona Fide Application as a result of changes requested by API to CLEC's original , then BellSouth will charge API

a Subsequent Application Fee. Major changes such as requesting additional space or adding additional equipment may require API to resubmit the Application with an Application Fee.

6.6.3 Application Modifications (Mississippi). If a modification or revision is made to any information in the Bona Fide Application for Remote Site Collocation or the Bona Fide Application for Adjacent Collocation, with the exception of modifications to Customer Information, Contact Information or Billing Contact Information, either at the request of API or necessitated by technical considerations, BellSouth will respond to the Bona Fide Application within thirty (30) business days after BellSouth receives such revised Application or at such other date as the Parties agree. If, at any time, BellSouth needs to reevaluate API's Bona Fide Application as a result of changes requested by API to CLEC's original Application, then BellSouth will charge API a Subsequent Application Fee. Major changes such as requesting additional space or adding additional equipment may require API to resubmit the Application with an Application Fee.

6.6.4 Application Modifications (Louisiana). If a modification or revision is made to any information in the Bona Fide Application for Remote Site Collocation or the Bona Fide Application for Adjacent Remote Site Collocation, with the exception of modifications to Customer Information, Contact Information or Billing Contact Information, either at the request of API or necessitated by technical considerations, BellSouth will respond to the Bona Fide Application within thirty (30) calendar days after BellSouth receives such revised Application or at such other date as the Parties agree. BellSouth will respond to such modifications or revisions within 30 calendar days for one to ten revised Applications; 35 calendar days for eleven to twenty revised Applications; and for requests of more than twenty revised Applications it is increased by five calendar days for every five revised Applications received within five business days. If, at any time, BellSouth needs to reevaluate API's Bona Fide Application as a result of changes requested by API to CLEC's original Application, then BellSouth will charge API a Subsequent Application Fee. Major changes such as requesting additional space or adding additional equipment may require API to resubmit the Application with an Application Fee.

6.6.5 Application Modifications (Kentucky & Georgia). If a modification or revision is made to any information in the Bona Fide Application for Remote Site Collocation or the Bona Fide Application for Adjacent Collocation, with the exception of modifications to Customer Information, Contact Information or Billing Contact Information, either at the request of API or necessitated by technical considerations, BellSouth will respond to the Bona Fide Application within thirty (30) calendar days after BellSouth receives such revised

Application or at such other date as the Parties agree. If, at any time, BellSouth needs to reevaluate API's Bona Fide Application as a result of changes requested by API to API's original Application, then BellSouth will charge API a Subsequent Application Fee. Major changes such as requesting additional space or adding additional equipment may require API to resubmit the Application with an Application Fee.

6.7 Bona Fide Firm Order. In Alabama, North Carolina, and Tennessee, API shall indicate its intent to proceed with equipment installation in a BellSouth Remote Site Location by submitting a Bona Fide Firm Order to BellSouth. A Firm Order shall be considered Bona Fide when API has completed the Application/Inquiry process described in Section 6.3, preceding, and has submitted the Firm Order document indicating acceptance of the Application Response provided by BellSouth. The Bona Fide Firm Order must be received by BellSouth no later than seven (7) calendar days after BellSouth's Application Response to API's Bona Fide Application, unless BellSouth provides an Application Response on or before the ten-day response interval set forth in section 2, in which case API must submit its Bona Fide Firm Order to BellSouth within seventeen (17) calendar days of BellSouth's receipt of the Bona Fide Application. If API fails to submit its Bona Fide Firm Order to BellSouth within the time frames set forth above, the provisioning intervals set forth in section 6.6 shall apply from the date of receipt of the Bona Fide Firm Order and not from the date of the Bona Fide Application. If API fails to submit a Bona Fide Firm Order within fifteen (15) days of receipt of an Application Response, the Application will expire.

6.7.1 Bona Fide Firm Order. Except as otherwise provided, in all States that have ordered provisioning intervals but not addressed Firm Order intervals, the following shall apply. API shall indicate its intent to proceed with equipment installation in a BellSouth Remote Site Location by submitting a Physical Expanded Interconnection Firm Order document ("Firm Order") to BellSouth. A Firm Order shall be considered Bona Fide when API has completed the Application/Inquiry process described in Section 6.3, preceding and has submitted the Firm Order document indicating acceptance of the Application Response provided by BellSouth. The Bona Fide Firm Order must be received by BellSouth no later than thirty (30) calendar days (in Mississippi 30 business days) after BellSouth's Application Response to API's Bona Fide Application or the Application will expire.

6.7.2 Bona Fide Firm Order (Kentucky & Mississippi). API shall indicate its intent to proceed with equipment installation in a BellSouth Remote Terminal Location by submitting a Physical Expanded Interconnection Firm Order document ("Firm Order") to BellSouth. A Firm Order shall be considered Bona Fide when API has completed the Application/Inquiry process described in Section

6.3, preceding and has submitted the Firm Order document indicating acceptance of the Application Response provided by BellSouth. The Bona Fide Firm Order must be received by BellSouth no later than thirty (30) calendar days (in Mississippi 30 business days) after BellSouth's Application Response to API's Bona Fide Application or the Application will expire.

6.7.3 BellSouth will establish a firm order date based upon the date BellSouth is in receipt of a Bona Fide Firm Order. BellSouth will acknowledge the receipt of API's Bona Fide Firm Order within seven (7) calendar days of receipt indicating that the Bona Fide Firm Order has been received. A BellSouth response to a Bona Fide Firm Order will include a Firm Order Confirmation containing the firm order date. No revisions will be made to a Bona Fide Firm Order.

6.8 BellSouth will permit one accompanied site visit to API's designated Remote Collocation Space after receipt of the Bona Fide Firm Order without charge to API.

6.9 API must submit to BellSouth the completed Access Control Request Form for all employees or agents requiring access to the BellSouth Remote Site Location a minimum of 30 calendar days prior to the date API desires access to the Remote Collocation Space. API may submit such a request at any time subsequent to BellSouth's receipt of the Bona Fide Firm Order. In the event API desires access to the Collocation Space after submitting such a request but prior to Access being approved, BellSouth shall permit API to access the Collocation Space, accompanied by a security escort at API's expense. API must request escorted access at least three (3) business days prior to the date such access is desired.

6.10 Construction and Provisioning Interval. In Alabama, North Carolina, and Tennessee, BellSouth will complete construction for Remote Site collocation arrangements within a maximum of 90 calendar days from receipt of an Application, or as agreed to by both parties. Under extraordinary conditions, BellSouth may elect to renegotiate an alternative provisioning interval with API or seek a waiver from this interval from the Commission. Examples of extraordinary conditions include, but are not limited to, extended license or permitting intervals; major BellSouth equipment rearrangement or addition; power plant addition or upgrade; major mechanical addition or upgrade; major upgrade for ADA compliance; environmental hazard or hazardous materials abatement; and arrangements for which equipment shipping intervals are extraordinary in length.

6.10.1 Construction and Provisioning Interval (Florida). BellSouth will complete construction for collocation arrangements as soon as possible and within a maximum of 90 calendar days from receipt of a Bona Fide Firm Order or as agreed to by the Parties. For changes to collocation space after initial space completion, BellSouth will complete construction for collocation arrangements as soon as possible and within a maximum of 45 calendar days from receipt of a Bona Fide Firm Order or as agreed to by the Parties. If BellSouth does not believe that construction will be completed within the relevant time frame and BellSouth and API cannot agree upon a completion date, within 45 calendar days of receipt of the Bona Fide Firm Order for an initial request, and within 30 calendar days for Augmentations, BellSouth may seek an extension from the Florida PSC.

6.10.2 Construction and Provisioning Interval (Georgia). BellSouth will use best efforts to complete construction for caged collocation arrangements under ordinary conditions as soon as possible and within a maximum of 90 calendar days from receipt of a Bona Fide Firm Order or as agreed to by the Parties. BellSouth will use best efforts to complete construction for cageless collocation arrangements under ordinary conditions as soon as possible and within a maximum of 60 calendar days from receipt of a Bona Fide Firm Order and 90 calendar days for extraordinary conditions or as agreed to by the Parties. Ordinary conditions are defined as space available with only minor changes to support systems required, such as but not limited to, HVAC, cabling and the power plant(s). Extraordinary conditions are defined to include but are not limited to major BellSouth equipment rearrangement or addition; power plant addition or upgrade; major mechanical addition or upgrade; major upgrade for ADA compliance; environmental hazard or hazardous materials abatement; and arrangements for which equipment shipping intervals are extraordinary in length. BellSouth may elect to renegotiate an alternative provisioning interval with API or seek a waiver from this interval from the Commission.

6.10.3 Construction and Provisioning Interval (Louisiana). BellSouth will complete construction for collocation arrangements under ordinary conditions as soon as possible and within a maximum of 120 calendar days from receipt of a Bona Fide Firm Order for an initial request, and within 60 calendar days for an Augmentation, or as agreed to by the Parties. Ordinary conditions are defined as space available with only minor changes to support systems required, such as but not limited to, HVAC, cabling and the power plant(s). BellSouth will complete construction of all other Collocation Space ("extraordinary conditions") within 180 calendar days of the receipt of a Bona Fide Firm Order. Examples of extraordinary conditions include but are not limited to, extended license or permitting intervals; major BellSouth equipment rearrangement or addition; power plant addition or upgrade; major

mechanical addition or upgrade; major upgrade for ADA compliance; environmental hazard or hazardous materials abatement; and arrangements for which equipment shipping intervals are extraordinary in length._BellSouth may elect to renegotiate an alternative provisioning interval with API or seek a waiver from this interval from the Commission.

6.10.4 Construction and Provisioning Interval (Mississippi). Excluding the time interval required to secure the appropriate government licenses and permits, BellSouth will complete construction for collocation arrangements under ordinary conditions as soon as possible and within a maximum of 120 calendar days from receipt of a Bona Fide Firm Order or as agreed to by the Parties. Ordinary conditions are defined as space available with only minor changes to support systems required, such as but not limited to, HVAC, cabling and the power plant(s). Excluding the time interval required to secure the appropriate government licenses and permits, BellSouth will complete construction of all other Collocation Space ("extraordinary conditions") within 180 calendar days of the receipt of a Bona Fide Firm Order. Examples of extraordinary conditions include but are not limited to, extended license or permitting intervals; major BellSouth equipment rearrangement or addition; power plant addition or upgrade; major mechanical addition or upgrade; major upgrade for ADA compliance; environmental hazard or hazardous materials abatement; and arrangements for which equipment shipping intervals are extraordinary in length. BellSouth may elect to renegotiate an alternative provisioning interval with API or seek a waiver from this interval from the Commission.

6.10.5 Construction and Provisioning Interval (Kentucky). Excluding the time interval required to secure the appropriate government licenses and permits, BellSouth will use best efforts to complete construction for collocation arrangements under ordinary conditions as soon as possible and within a maximum of 90 calendar days from receipt of a Bona Fide Firm Order or as agreed to by the Parties. Ordinary conditions are defined as space available with only minor changes to support systems required, such as but not limited to, HVAC, cabling and the power plant(s). Excluding the time interval required to secure the appropriate government licenses and permits, BellSouth will use best efforts to complete construction of all other Collocation Space ("extraordinary conditions") within 130 calendar days of the receipt of a Bona Fide Firm Order. Extraordinary conditions are defined to include but are not limited to major BellSouth equipment rearrangement or addition; power plant addition or upgrade; major mechanical addition or upgrade; major upgrade for ADA compliance; environmental hazard or hazardous materials abatement; and arrangements for which equipment shipping intervals are extraordinary in length. BellSouth may elect to

renegotiate an alternative provisioning interval with API or seek a waiver from this interval from the Commission.

6.10.6 Construction and Provisioning Interval (South Carolina). BellSouth will complete the construction and provisioning activities for cageless and caged collocation arrangements as soon as possible, but no later than 90 calendar days from receipt of a bona fide firm order. BellSouth may elect to renegotiate an alternative provisioning interval with API or seek a waiver from this interval from the Commission.

6.11 In the event BellSouth does not have space immediately available at a Remote Site Location, BellSouth may elect to make additional space available by, for example but not limited to, rearranging BellSouth facilities or constructing additional capacity. In such cases, excluding the time interval required to secure the appropriate government licenses and permits or additional public or private rights of way, BellSouth will provision the Remote Collocation Space in a nondiscriminatory manner and at parity with BellSouth and will provide API with the estimated completion date in its Response.

6.12 Permits. Each Party or its agents will diligently pursue filing for the permits required for the scope of work to be performed by that Party or its agents within ten (10) calendar days of the completion of finalized construction designs and specifications.

6.13 Acceptance Walk Through. Upon request, API will contact BellSouth within seven (7) days of collocation space being ready to schedule an acceptance walk through of each Remote Collocation Space requested from BellSouth by API. BellSouth will correct any deviations to API's original or jointly amended requirements within seven (7) calendar days after the walk through, unless the Parties jointly agree upon a different time frame.

6.14 Use of BellSouth Certified Supplier. API shall select a supplier that has been approved as a BellSouth Certified Supplier to perform all engineering and installation work required in the Remote Collocation Space per TR 73503 specifications. BellSouth shall provide API with a list of BellSouth Certified Suppliers upon request. The BellSouth Certified Supplier(s) shall be responsible for installing API'''s equipment and components, extending power cabling to the BellSouth power distribution frame, performing operational tests after installation is complete, and notifying BellSouth's Outside Plant engineers and API upon successful completion of installation. The BellSouth Certified Supplier shall bill API directly for all work performed for API pursuant to this Attachment and BellSouth shall have no liability for nor responsibility to pay such charges imposed by the BellSouth Certified Supplier. BellSouth shall consider certifying API or any supplier proposed by API. All work

performed by or for API shall conform to generally accepted industry guidelines and standards.

6.15 Alarm and Monitoring. BellSouth may place alarms in the Remote Site Location for the protection of BellSouth equipment and facilities. API shall be responsible for placement, monitoring and removal of alarms used to service API's Remote Collocation Space and for ordering the necessary services therefor. Both Parties shall use best efforts to notify the other of any verified hazardous conditions known to that Party.

6.16 Basic Telephone Service. Upon request of API, BellSouth will provide basic telephone service to the Remote Collocation Space under the rates, terms and conditions of the current tariff offering for the service requested.

6.17 Virtual Remote Site Collocation Relocation. BellSouth offers Virtual Collocation pursuant to the terms and conditions set forth in its F.C.C. Tariff No. 1 for Remote Site Collocation locations. The rates shall be the same as provided in this Exhibit A of this agreement. For the interconnection to BellSouth's network and access to BellSouth unbundled network elements, API may purchase 2-wire and 4-wire cross-connects as set forth the service inquiry procedures established for sub loop unbundling as set forth in Attachment 2 of the Interconnection Agreement, and API may place within its Virtual Collocation arrangements the telecommunications equipment set forth in Section 5.1. In the event physical Remote Collocation Space was previously denied at a Remote Site Location due to technical reasons or space limitations, and that physical Remote Collocation Space has subsequently become available, API may relocate its virtual Remote Site collocation arrangements to physical Remote Site collocation arrangements and pay the appropriate non-recurring fees for physical Remote Site collocation and for the rearrangement or reconfiguration of services terminated in the virtual Remote Site collocation arrangement, as outlined in the appropriate BellSouth tariffs. In the event that BellSouth knows when additional space for physical Remote Site collocation may become available at the location requested by API, such information will be provided to API in BellSouth's written denial of physical Remote Site collocation. To the extent that (i) physical Remote Collocation Space becomes available to API within 180 calendar days of BellSouth's written denial of API's request for physical collocation, and (ii) API was not informed in the written denial that physical Remote Collocation Space would become available within such 180 calendar days, then API may relocate its virtual Remote Site collocation arrangement to a physical Remote Site collocation arrangement and will receive a credit for any nonrecurring charges previously paid for such virtual Remote Site collocation. API must arrange with a BellSouth Certified Supplier for the

relocation of equipment from its virtual Remote Collocation Space to its physical Remote Collocation Space and will bear the cost of such relocation.

6.18 Cancellation. If, at anytime prior to space acceptance, API cancels its order for the Remote Collocation Space(s), API will reimburse BellSouth in the following manner: BellSouth will ascertain how far preparation work has progressed. API will be billed the applicable non recurring rate for any and all work processes for which work has begun.

6.19 Licenses. API, at its own expense, will be solely responsible for obtaining from governmental authorities, and any other appropriate agency, entity, or person, all rights, privileges, and licenses necessary or required to operate as a provider of telecommunications services to the public or to occupy the Remote Collocation Space.

6.20 Environmental Hazard Guidelines. The Parties agree to utilize and adhere to the Environmental Hazard Guidelines identified as Exhibit B attached hereto.

7. Rates and Charges

7.1 Recurring Fees. Recurring fees for space occupancy shall be billed upon space completion or space acceptance, whichever occurs first. Other charges shall be billed upon request for the services. All charges shall be due as dictated by API's current billing cycle.

7.2 Rack/Bay Space. The rack/bay space charge includes reasonable charges for air conditioning, ventilation and other allocated expenses associated with maintenance of the Remote Site Location, and includes amperage necessary to power API's equipment. API shall pay rack/bay space charges based upon the number of racks/bays requested. BellSouth will assign Remote Collocation Space in conventional remote site rack/bay lineups where feasible

7.3 Power. BellSouth shall make available –48 Volt (-48V) DC power for API's Remote Collocation Space at a BellSouth Power Board (Fuse and Alarm Panel) or BellSouth Battery Distribution Fuse Bay ("BDFB") at API's option within the Remote Site Location. The charge for power shall be assessed as part of the recurring charge for rack/bay space. If the power requirements for API's equipment exceeds the capacity for the rack/bay, then such power requirements shall be assessed on a recurring per amp basis for the individual case.

7.3.1 Charges for AC power will be assessed per breaker ampere per month. Rates include the provision of commercial and standby AC power. When

obtaining power from a BellSouth service panel, protection devices and power cables must be engineered (sized), and installed by API's BellSouth Certified Supplier except that BellSouth shall engineer and install protection devices and power cables for Adjacent Collocation. API's BellSouth Certified Supplier must also provide a copy of the engineering power specification prior to the Commencement Date. AC power voltage and phase ratings shall be determined on a per location basis. At API's option, API may arrange for AC power in an Adjacent Collocation arrangement from a retail provider of electrical power.

7.4 Security Escort. A security escort will be required whenever API or its approved agent desires access to the Remote Site Location after the one accompanied site visit allowed prior to completing BellSouth's Security Training requirements and/or prior to Space Acceptance. The parties agree that a security escort will not be required for remote site collocation. However, if one is needed, the parties will negotiate appropriate security escort rates which will be assessed on a one half (1/2) hour increment basis.

7.5 Rate "True-Up". The Parties agree that the prices reflected as interim herein shall be "trued-up" (up or down) based on final prices either determined by further agreement or by final order, including any appeals, in a proceeding involving BellSouth before the regulatory authority for the state in which the services are being performed or any other body having jurisdiction over this Agreement (hereinafter "Commission"). Under the "true-up" process, the interim price for each service shall be multiplied by the volume of that service purchased to arrive at the total interim amount paid for that service ("Total Interim Price"). The final price for that service shall be multiplied by the volume purchased to arrive at the total final amount due ("Total Final Price"). The Total Interim Price shall be compared with the Total Final Price. If the Total Final Price is more than the Total Interim Price, API shall pay the difference to BellSouth. If the Total Final Price is less than the Total Interim Price, BellSouth shall pay the difference to API. Each Party shall keep its own records upon which a "true-up" can be based and any final payment from one Party to the other shall be in an amount agreed upon by the Parties based on such records. In the event of any disagreement as between the records or the Parties regarding the amount of such "true-up," the Parties agree that the Commission shall be called upon to resolve such differences.

7.6 Other. If no rate is identified in the contract, the rate for the specific service or function will be negotiated by the Parties upon request by either Party. Payment of all other charges under this Attachment shall be due as dictated by API's current billing cycle API will pay a late payment charge as specified in the current State Tariff.

8. Insurance

8.1 Maintain Insurance. API shall, at its sole cost and expense, procure, maintain, and keep in force insurance as specified in this Section 8 and underwritten by insurance companies licensed to do business in the states applicable under this Attachment and having a Best's Insurance Rating of A-.

8.2 Coverage. API shall maintain the following specific coverage:

8.2.1 Commercial General Liability coverage in the amount of ten million dollars ($10,000,000.00) or a combination of Commercial General Liability and Excess/Umbrella coverage totaling not less than ten million dollars ($10,000,000.00). BellSouth shall be named as an Additional Insured on the Commercial General Liability policy as specified herein.

8.2.2 Statutory Workers Compensation coverage and Employers Liability coverage in the amount of one hundred thousand dollars ($100,000.00) each accident, one hundred thousand dollars ($100,000.00) each employee by disease, and five hundred thousand dollars ($500,000.00) policy limit by disease.

8.2.3 All Risk Property coverage on a full replacement cost basis insuring all of API's real and personal property situated on or within BellSouth's Remote Site Location.

8.2.4 API may elect to purchase business interruption and contingent business interruption insurance, having been advised that BellSouth assumes no liability for loss of profit or revenues should an interruption of service occur.

8.3 Limits. The limits set forth in Section 8.2 above may be increased by BellSouth from time to time during the term of this Attachment upon thirty (30) days notice to API to at least such minimum limits as shall then be customary with respect to comparable occupancy of BellSouth structures.

8.4 All policies purchased by API shall be deemed to be primary. All policies purchased by API shall be deemed to be primary and not contributing to or in excess of any similar coverage purchased by BellSouth. All insurance must be in effect on or before the date equipment is delivered to BellSouth's Remote Site Location and shall remain in effect for the term of this Attachment or until all API'''s property has been removed from BellSouth's Remote Site Location, whichever period is longer. If API fails to maintain required coverage, BellSouth may pay the premiums thereon and seek reimbursement of same from API.

8.5 Submit certificates of insurance. API shall submit certificates of insurance reflecting the coverage required pursuant to this Section a minimum of ten (10) business days prior to the commencement of any work in the Remote Collocation Space. Failure to meet this interval may result in construction and equipment installation delays. API shall arrange for BellSouth to receive thirty (30) business days' advance notice of cancellation from API'''s insurance company. API shall forward a certificate of insurance and notice of cancellation/non-renewal to BellSouth at the following address:

BellSouth Telecommunications, Inc.
Attn.: Risk Management Coordinator
675 W. Peachtree Street
Rm. 17H53
Atlanta, Georgia 30375

8.6 Conformance to recommendations made by BellSouth's fire insurance company. API must conform to recommendations made by BellSouth's fire insurance company to the extent BellSouth has agreed to, or shall hereafter agree to, such recommendations.

8.7 Self-Insurance. If API's net worth exceeds five hundred million dollars ($500,000,000), API may elect to request self-insurance status in lieu of obtaining any of the insurance required in Sections 8.2.1 and 8.2.3. API shall provide audited financial statements to BellSouth thirty (30) days prior to the commencement of any work in the Remote Collocation Space. BellSouth shall then review such audited financial statements and respond in writing to API in the event that self-insurance status is not granted to API. If BellSouth approves API for self-insurance, API shall annually furnish to BellSouth, and keep current, evidence of such net worth that is attested to by one of API's corporate officers. The ability to self-insure shall continue so long as API meets all of the requirements of this Section. If API subsequently no longer satisfies this Section, API is required to purchase insurance as indicated by Sections 8.2.1 and 8.2.3.

8.8 Net worth requirements. The net worth requirements set forth in Section 8.7 may be increased by BellSouth from time to time during the term of this Attachment upon thirty (30) days' notice to API to at least such minimum limits as shall then be customary with respect to comparable occupancy of BellSouth structures.

8.9 Failure to comply. Failure to comply with the provisions of this Section will be deemed a material breach of this Attachment.

9. Mechanics Liens

9.1 Mechanics Lien or other Liens. If any mechanics lien or other liens shall be filed against property of either Party (BellSouth or API), or any improvement thereon by reason of or arising out of any labor or materials furnished or alleged to have been furnished or to be furnished to or for the other Party or by reason of any changes, or additions to said property made at the request or under the direction of the other Party, the other Party directing or requesting those changes shall, within thirty (30) business days after receipt of written notice from the Party against whose property said lien has been filed, either pay such lien or cause the same to be bonded off the affected property in the manner provided by law. The Party causing said lien to be placed against the property of the other shall also defend, at its sole cost and expense, on behalf of the other, any action, suit or proceeding which may be brought for the enforcement of such liens and shall pay any damage and discharge any judgment entered thereon.

10. Inspections

10.1 BellSouth may conduct inspection. BellSouth may conduct an inspection of API's equipment and facilities in the Remote Collocation Space(s) prior to the activation of facilities between API's equipment and equipment of BellSouth. BellSouth may conduct an inspection if API adds equipment and may otherwise conduct routine inspections at reasonable intervals mutually agreed upon by the Parties. BellSouth shall provide API with a minimum of forty-eight (48) hours or two (2) business days, whichever is greater, advance notice of all such inspections. All costs of such inspection shall be borne by BellSouth.

11. Security and Safety Requirements

11.1 The security and safety requirements. The security and safety requirements set forth in this section are as stringent as the security requirements BellSouth maintains at its own Remote Site Location either for their own employees or for authorized contractors. Only BellSouth employees, BellSouth Certified Contractors and authorized employees, authorized Guests, pursuant to Section 3.3, proceeding, or authorized agents of API will be permitted in the BellSouth Remote Site Location. API shall provide its employees and agents with picture identification which must be worn and visible at all times while in the Remote Collocation Space or other areas in or around the Remote Site Location. The photo Identification card shall bear, at a minimum, the employee's name and photo, and the API name. BellSouth reserves the right to remove from its Remote Site Location any employee of API not possessing identification issued by API or who have violated any of

BellSouth's policies as outlined in the CLEC Security Training documents. API shall hold BellSouth harmless for any damages resulting from such removal of its personnel from BellSouth Remote Site Location. API shall be solely responsible for ensuring that any Guest of API is in compliance with all subsections of this Section 11.

11.1.1 API will be required, at its own expense, to conduct a statewide investigation of criminal history records for each API employee being considered for work on the BellSouth Remote Site Location, for the states/counties where the API employee has worked and lived for the past five years. Where state law does not permit statewide collection or reporting, an investigation of the applicable counties is acceptable.

11.1.2 API will be required to administer to their personnel assigned to the BellSouth Remote Site Location security training either provided by BellSouth, or meeting criteria defined by BellSouth.

11.1.3 API shall not assign to the BellSouth Remote Site Location any personnel with records of felony criminal convictions. API shall not assign to the BellSouth Remote Site Location any personnel with records of misdemeanor convictions, except for misdemeanor traffic violations, without advising BellSouth of the nature and gravity of the offense(s). BellSouth reserves the right to refuse building access to any API personnel who have been identified to have misdemeanor criminal convictions. Notwithstanding the foregoing, in the even that API chooses not to advise BellSouth of the nature and gravity of any misdemeanor conviction, API may, in the alternative, certify to BellSouth that it shall not assign to the BellSouth Remote Site Location any personnel with records of misdemeanor convictions (other than misdemeanor traffic violations).

11.1.4 For each API employee requiring access to a BellSouth Remote Site Location pursuant to this Attachment, API shall furnish BellSouth, prior to an employee gaining such access, a certification that the aforementioned background check and security training were completed. The certification will contain a statement that no felony convictions were found and certifying that the security training was completed by the employee. If the employee's criminal history includes misdemeanor convictions, API will disclose the nature of the convictions to BellSouth at that time. In the alternative, API may certify to BellSouth that it shall not assign to the BellSouth Remote Site Location any personnel with records of misdemeanor convictions other than misdemeanor traffic violations.

11.1.5 At BellSouth's request, API shall promptly remove from the BellSouth's Remote Site Location any employee of API BellSouth does not wish to grant

access to its Remote Site Location 1) pursuant to any investigation conducted by BellSouth or 2) prior to the initiation of an investigation in the event that an employee of API is found interfering with the property or personnel of BellSouth or another CLEC, provided that an investigation shall promptly be commenced by BellSouth.

11.2 Notification to BellSouth. BST reserves the right to interview API's employees, agents, or contractors in the event of wrongdoing in or around BellSouth's property or involving BellSouth's or another CLEC's property or personnel, provided that BellSouth shall provide reasonable notice to API's Security contact of such interview. API and its contractors shall reasonably cooperate with BellSouth's investigation into allegations of wrongdoing or criminal conduct committed by, witnessed by, or involving API's employees, agents, or contractors. Additionally, BellSouth reserves the right to bill API for all reasonable costs associated with investigations involving its employees, agents, or contractors if it is established and mutually agreed in good faith that API's employees, agents, or contractors are responsible for the alleged act. BellSouth shall bill API for BellSouth property which is stolen or damaged where an investigation determines the culpability of API's employees, agents, or contractors and where API agrees, in good faith, with the results of such investigation. API shall notify BellSouth in writing immediately in the event that the CLEC discovers one of its employees already working on the BellSouth Remote Site Location is a possible security risk. Upon request of the other Party, the Party who is the employer shall discipline consistent with its employment practices, up to and including removal from the BellSouth Remote Site Location, any employee found to have violated the security and safety requirements of this section. API shall hold BellSouth harmless for any damages resulting from such removal of its personnel from BellSouth Remote Site Location.

11.3 Use of Supplies. Unauthorized use of telecommunications equipment or supplies either Party, whether or not used routinely to provide telephone service (e.g. plug-in cards,) will be strictly prohibited and handled appropriately. Costs associated with such unauthorized use may be charged to the offending Party, as may be all associated investigative costs.

11.4 Use of Official Lines. Except for non-toll calls necessary in the performance of their work, neither Party shall use the telephones of the other Party on the BellSouth Remote Site Location. Charges for unauthorized telephone calls may be charged to the offending Party, as may be all associated investigative costs.

11.5 Accountability. Full compliance with the Security requirements of this section shall in no way limit the accountability of either Party to the other for the improper actions of its employees.

12. Destruction of Remote Collocation Space

12.1 Remote Collocation Space is damaged. In the event a Remote Collocation Space is wholly or partially damaged by fire, windstorm, tornado, flood or by similar causes to such an extent as to be rendered wholly unsuitable for API's permitted use hereunder, then either Party may elect within ten (10) business days after such damage, to terminate this Attachment with respect to the affected Remote Collocation Space, and if either Party shall so elect, by giving the other written notice of termination, both Parties shall stand released of and from further liability under the terms hereof with respect to such Remote Collocation Space. If the Remote Collocation Space shall suffer only minor damage and shall not be rendered wholly unsuitable for API'''s permitted use, or is damaged and the option to terminate is not exercised by either Party, BellSouth covenants and agrees to proceed promptly without expense to API, except for improvements not the property of BellSouth, to repair the damage. BellSouth shall have a reasonable time within which to rebuild or make any repairs, and such rebuilding and repairing shall be subject to delays caused by storms, shortages of labor and materials, government regulations, strikes, walkouts, and causes beyond the control of BellSouth, which causes shall not be construed as limiting factors, but as exemplary only. API may, at its own expense, accelerate the rebuild of its Remote Collocation Space and equipment provided however that a BellSouth Certified Contractor is used and the necessary space preparation has been completed. Rebuild of equipment must be performed by a BellSouth Certified Vendor. If API'''s acceleration of the project increases the cost of the project, then those additional charges will be incurred by API. Where allowed and where practical, API may erect a temporary facility while BellSouth rebuilds or makes repairs. In all cases where the Remote Collocation Space shall be rebuilt or repaired, API shall be entitled to an equitable abatement of rent and other charges, depending upon the unsuitability of the Remote Collocation Space for API'''s permitted use, until such Remote Collocation Space is fully repaired and restored and API'''s equipment installed therein (but in no event later than thirty (30) business days after the Remote Collocation Space is fully repaired and restored). Where API has placed a Remote Site Adjacent Arrangement pursuant to section 3.4, API shall have the sole responsibility to repair or replace said Remote Site Adjacent Arrangement provided herein. Pursuant to this section, BellSouth will restore the associated services to the Remote Site Adjacent Arrangement.

13. Eminent Domain

13.1 Power of Eminent Domain. If the whole of a Remote Collocation Space or Remote Site Adjacent Arrangement shall be taken by any public authority under the power of eminent domain, then this Attachment shall terminate with respect to such Remote Collocation Space or Remote Site Adjacent Arrangement as of the day possession shall be taken by such public authority and rent and other charges for the Remote Collocation Space or Remote Site Adjacent Arrangement shall be paid up to that day with proportionate refund by BellSouth of such rent and charges as may have been paid in advance for a period subsequent to the date of the taking. If any part of the Remote Collocation Space or Remote Site Adjacent Arrangement shall be taken under eminent domain, BellSouth and API shall each have the right to terminate this Attachment with respect to such Remote Collocation Space or Remote Site Adjacent Arrangement and declare the same null and void, by written notice of such intention to the other Party within ten (10) business days after such taking.

14. Nonexclusivity

14.1 Attachment is not exclusive. API understands that this Attachment is not exclusive and that BellSouth may enter into similar agreements with other Parties. Assignment of space pursuant to all such agreements shall be determined by space availability and made on a first come, first served basis.

EXHIBIT A: BELLSOUTH/API RATES – ALABAMA REMOTE SITE COLLOCATION

Rates marked with an asterisk (*) are interim and are subject to true-up

USOC	Rate Element Description	Unit	Recurring Rate (RC)	Non-Recurring Rate (NRC)

PE1RA	Application Fee*	Per request	N/A	$869.18
PE1RB	Cabinet Space *	Per Rack/Bay	$230.19	N/A
PE1RC	Power Upgrade*	Per fused amp	N/A	ICB/TBD
PE1RD	Security Access System New Key*	Per Key	N/A	$26.19
PE1SR	Space Availability Report*	Per premises requested	N/A	$231.74
PE1RE	Request for CLLI*	Per Premises Requested	N/A	$75.11
AEH	Additional Engineering Fee **(Note 1)**	Per request, First half hour/add'l half hour	N/A	-
	Security Escort **(Note 1)**	Per half hr/add'l half hr		
PE1BT	Basic Time		NA	-
PE1OT	Overtime		NA	-
PE1PT	Premium Time		NA	-

Note(s):
N/A stipulates the part of the rate element (RC or NRC) not applying to the element
ICB/TBD rates will be on an Individual Case Basis .

(1) Security Escort and Additional Engineering Fees should not be needed for remote site collocation. If they become necessary, the parties will negotiate appropriate rates.

EXHIBIT A: BELLSOUTH/API RATES – FLORIDA
REMOTE SITE COLLOCATION

Rates marked with an asterisk (*) are interim and are subject to true-up

USOC	Rate Element Description	Unit	Recurring Rate (RC)	Non-Recurring Rate (NRC)
PE1RA	Application Fee*	Per request	N/A	$874.14
PE1RB	Cabinet Space *	Per Rack/Bay	$232.50	N/A
PE1RC	Power Upgrade*	Per fused amp	N/A	ICB/TBD
PE1RD	Security Access System New Key*	Per Key	N/A	$26.20
PE1SR	Space Availability Report*	Per premises requested	N/A	$231.45
PE1RE	Request for CLLI*	Per Premises Requested	N/A	$75.13
AEH	Additional Engineering Fee **(Note 1)**	Per request, First half hour/add'l half hour	N/A	-
	Security Escort **(Note 1)**	Per half hr/add'l half hr		
PE1BT	Basic Time		NA	-
PE1OT	Overtime		NA	-
PE1PT	Premium Time		NA	-

Note(s):
N/A stipulates the part of the rate element (RC or NRC) not applying to the element
ICB/TBD rates will be on an Individual Case Basis.

(1) Security Escort and Additional Engineering Fees should not be needed for remote site collocation. If they become necessary, the parties will negotiate appropriate rates.

EXHIBIT A: BELLSOUTH/API RATES – GEORGIA
REMOTE SITE COLLOCATION

Rates marked with an asterisk (*) are interim and are subject to true-up

USOC	Rate Element Description	Unit	Recurring Rate (RC)	Non-Recurring Rate (NRC)
PE1RA	Application Fee*	Per request	N/A	$931.61
PE1RB	Cabinet Space *	Per Rack/Bay	$224.82	N/A
PE1RC	Power Upgrade*	Per fused amp	N/A	ICB/TBD
PE1RD	Security Access System New Key*	Per Key	N/A	$25.88
PE1SR	Space Availability Report*	Per premises requested	N/A	$229.02
PE1RE	Request for CLLI*	Per Premises Requested	N/A	$74.22
AEH	Additional Engineering Fee **(Note 1)**	Per request, First half hour/add'l half hour	N/A	-
	Security Escort **(Note 1)**	Per half hr/add'l half hr		
PE1BT	Basic Time		NA	-
PE1OT	Overtime		NA	-
PE1PT	Premium Time		NA	-

Note(s):
N/A stipulates the part of the rate element (RC or NRC) not applying to the element
ICB/TBD rates will be on an Individual Case Basis.

(1) Security Escort and Additional Engineering Fees should not be needed for remote site collocation. If they become necessary, the parties will negotiate appropriate rates.

EXHIBIT A: BELLSOUTH/API RATES – KENTUCKY
REMOTE SITE COLLOCATION

Rates marked with an asterisk (*) are interim and are subject to true-up

USOC	Rate Element Description	Unit	Recurring Rate (RC)	Non-Recurring Rate (NRC)
PE1RA	Application Fee*	Per request	N/A	$868.91
PE1RB	Cabinet Space *	Per Rack/Bay	$224.41	N/A
PE1RC	Power Upgrade*	Per fused amp	N/A	ICB/TBD
PE1RD	Security Access System New Key*	Per Key	N/A	$26.60
PE1SR	Space Availability Report*	Per premises requested	N/A	$231.82
PE1RE	Request for CLLI*	Per Premises Requested	N/A	$75.13
AEH	Additional Engineering Fee **(Note 1)**	Per request, First half hour/add'l half hour	N/A	-
	Security Escort **(Note 1)**	Per half hr/add'l half hr		
PE1BT	Basic Time		NA	-
PE1OT	Overtime		NA	-
PE1PT	Premium Time		NA	-

Note(s):
N/A stipulates the part of the rate element (RC or NRC) not applying to the element
ICB/TBD rates will be on an Individual Case Basis.

(1) Security Escort and Additional Engineering Fees should not be needed for remote site collocation. If they become necessary, the parties will negotiate appropriate rates.

EXHIBIT A: BELLSOUTH/API RATES – LOUISIANA
REMOTE SITE COLLOCATION

Rates marked with an asterisk (*) are interim and are subject to true-up

USOC	Rate Element Description	Unit	Recurring Rate (RC)	Non-Recurring Rate (NRC)
PE1RA	Application Fee*	Per request	N/A	$868.25
PE1RB	Cabinet Space *	Per Rack/Bay	$257.01	N/A
PE1RC	Power Upgrade*	Per fused amp	N/A	ICB/TBD
PE1RD	Security Access System New Key*	Per Key	N/A	$26.16
PE1SR	Space Availability Report*	Per premises requested	N/A	$231.49
PE1RE	Request for CLLI*	Per Premises Requested	N/A	$75.02
AEH	Additional Engineering Fee **(Note 1)**	Per request, First half hour/add'l half hour	N/A	-
	Security Escort **(Note 1)**	Per half hr/add'l half hr		
PE1BT	Basic Time		NA	-
PE1OT	Overtime		NA	-
PE1PT	Premium Time		NA	-

Note(s):
N/A stipulates the part of the rate element (RC or NRC) not applying to the element
ICB/TBD rates will be on an Individual Case Basis.

(1) Security Escort and Additional Engineering Fees should not be needed for remote site collocation. If they become necessary, the parties will negotiate appropriate rates.

EXHIBIT A: BELLSOUTH/API RATES – MISSISSIPPI
REMOTE SITE COLLOCATION

Rates marked with an asterisk (*) are interim and are subject to true-up

USOC	Rate Element Description	Unit	Recurring Rate (RC)	Non-Recurring Rate (NRC)
PE1RA	Application Fee*	Per request	N/A	$868.60
PE1RB	Cabinet Space *	Per Rack/Bay	$241.11	N/A
PE1RC	Power Upgrade*	Per fused amp	N/A	ICB/TBD
PE1RD	Security Access System New Key*	Per Key	N/A	$26.16
PE1SR	Space Availability Report*	Per premises requested	N/A	$231.43
PE1RE	Request for CLLI*	Per Premises Requested	N/A	$75.01
AEH	Additional Engineering Fee **(Note 1)**	Per request, First half hour/add'l half hour	N/A	-
	Security Escort **(Note 1)**	Per half hr/add'l half hr		
PE1BT	Basic Time		NA	-
PE1OT	Overtime		NA	-
PE1PT	Premium Time		NA	-

Note(s):
N/A stipulates the part of the rate element (RC or NRC) not applying to the element
ICB/TBD rates will be on an Individual Case Basis.

(1) Security Escort and Additional Engineering Fees should not be needed for remote site collocation. If they become necessary, the parties will negotiate appropriate rates.

EXHIBIT A: BELLSOUTH/API RATES – NORTH CAROLINA REMOTE SITE COLLOCATION

Rates marked with an asterisk (*) are interim and are subject to true-up

USOC	Rate Element Description	Unit	Recurring Rate (RC)	Non-Recurring Rate (NRC)
PE1RA	Application Fee*	Per request	N/A	$865.34
PE1RB	Cabinet Space *	Per Rack/Bay	$254.02	N/A
PE1RC	Power Upgrade*	Per fused amp	N/A	ICB/TBD
PE1RD	Security Access System New Key*	Per Key	N/A	$26.06
PE1SR	Space Availability Report*	Per premises requested	N/A	$230.60
PE1RE	Request for CLLI*	Per Premises Requested	N/A	$74.74
AEH	Additional Engineering Fee **(Note 1)**	Per request, First half hour/add'l half hour	N/A	-
	Security Escort **(Note 1)**	Per half hr/add'l half hr		
PE1BT	Basic Time		NA	-
PE1OT	Overtime		NA	-
PE1PT	Premium Time		NA	-

Note(s):
N/A stipulates the part of the rate element (RC or NRC) not applying to the element
ICB/TBD rates will be on an Individual Case Basis.

(1) Security Escort and Additional Engineering Fees should not be needed for remote site collocation. If they become necessary, the parties will negotiate appropriate rates.

EXHIBIT A: BELLSOUTH/API RATES – SOUTH CAROLINA REMOTE SITE COLLOCATION

Rates marked with an asterisk (*) are interim and are subject to true-up

USOC	Rate Element Description	Unit	Recurring Rate (RC)	Non-Recurring Rate (NRC)
PE1RA	Application Fee*	Per request	N/A	$871.12
PE1RB	Cabinet Space *	Per Rack/Bay	$246.44	N/A
PE1RC	Power Upgrade*	Per fused amp	N/A	ICB/TBD
PE1RD	Security Access System New Key*	Per Key	N/A	$26.25
PE1SR	Space Availability Report*	Per premises requested	N/A	$232.25
PE1RE	Request for CLLI*	Per Premises Requested	N/A	$75.27
AEH	Additional Engineering Fee **(Note 1)**	Per request, First half hour/add'l half hour	N/A	-
	Security Escort **(Note 1)**	Per half hr/add'l half hr		
PE1BT	Basic Time		NA	-
PE1OT	Overtime		NA	-
PE1PT	Premium Time		NA	-

Note(s):
N/A stipulates the part of the rate element (RC or NRC) not applying to the element
ICB/TBD rates will be on an Individual Case Basis.

(1) Security Escort and Additional Engineering Fees should not be needed for remote site collocation. If they become necessary, the parties will negotiate appropriate rates.

EXHIBIT A: BELLSOUTH/API RATES – TENNESSEE REMOTE SITE COLLOCATION

Rates marked with an asterisk (*) are interim and are subject to true-up

USOC	Rate Element Description	Unit	Recurring Rate (RC)	Non-Recurring Rate (NRC)
PE1RA	Application Fee*	Per request	N/A	$872.95
PE1RB	Cabinet Space *	Per Rack/Bay	$219.37	N/A
PE1RC	Power Upgrade*	Per fused amp	N/A	ICB/TBD
PE1RD	Security Access System New Key*	Per Key	N/A	$26.23
PE1SR	Space Availability Report*	Per premises requested	N/A	$232.12
PE1RE	Request for CLLI*	Per Premises Requested	N/A	$75.23
AEH	Additional Engineering Fee **(Note 1)**	Per request, First half hour/add'l half hour	N/A	-
	Security Escort **(Note 1)**	Per half hr/add'l half hr		
PE1BT	Basic Time		NA	-
PE1OT	Overtime		NA	-
PE1PT	Premium Time		NA	-

Note(s):
N/A stipulates the part of the rate element (RC or NRC) not applying to the element
ICB/TBD rates will be on an Individual Case Basis.

(1) Security Escort and Additional Engineering Fees should not be needed for remote site collocation. If they become necessary, the parties will negotiate appropriate rates.

ENVIRONMENTAL AND SAFETY PRINCIPLES

The following principles provide basic guidance on environmental and safety issues when applying for and establishing Physical Collocation arrangements.

1. GENERAL PRINCIPLES

1.1 Compliance with Applicable Law. BellSouth and API agree to comply with applicable federal, state, and local environmental and safety laws and regulations including U.S. Environmental Protection Agency (USEPA) regulations issued under the Clean Air Act (CAA), Clean Water Act (CWA), Resource Conservation and Recovery Act (RCRA), Comprehensive Environmental Response, Compensation and Liability Act (CERCLA), Superfund Amendments and Reauthorization Act (SARA), the Toxic Substances Control Act (TSCA), and OSHA regulations issued under the Occupational Safety and Health Act of 1970, as amended and NFPA and National Electrical Codes (NEC) and the NESC ("Applicable Laws"). Each Party shall notify the other if compliance inspections are conducted by regulatory agencies and/or citations are issued that relate to any aspect of this Attachment.

1.2 Notice. BellSouth and API shall provide notice to the other, including Material Safety Data Sheets (MSDSs), of known and recognized physical hazards or Hazardous Chemicals existing on site or brought on site. Each Party is required to provide specific notice for known potential Imminent Danger conditions. API should contact 1-800-743-6737 for BellSouth MSDS sheets.

1.3 Practices/Procedures. BellSouth may make available additional environmental control procedures for API to follow when working at a BellSouth Premises (See Section 2, below). These practices/procedures will represent the regular work practices required to be followed by the employees and contractors of BellSouth for environmental protection. API will require its contractors, agents and others accessing the BellSouth Premises to comply with these practices. Section 2 lists the Environmental categories where BST practices should be followed by CLEC when operating in the BellSouth Premises.

1.4 Environmental and Safety Inspections. BellSouth reserves the right to inspect the API space with proper notification. BellSouth reserves the right to stop any API work operation that imposes Imminent Danger to the environment, employees or other persons in the area or Facility.

1.5 Hazardous Materials Brought On Site. Any hazardous materials brought into, used, stored or abandoned at the BellSouth Premises by API are owned by API. API will indemnify BellSouth for claims, lawsuits or damages to persons or property caused by these materials. Without prior written BellSouth approval, no substantial new safety or environmental hazards can be created by API or different hazardous materials used by API at BellSouth Facility. API must demonstrate adequate emergency response capabilities for its materials used or remaining at the BellSouth Facility.

1.6 Spills and Releases. When contamination is discovered at a BellSouth Premises, the Party discovering the condition must notify BellSouth. All Spills or Releases of regulated materials will immediately be reported by API to BellSouth.

1.7 Coordinated Environmental Plans and Permits. BellSouth and API will coordinate plans, permits or information required to be submitted to government agencies, such as emergency response plans, spill prevention control and countermeasures (SPCC) plans and community reporting. If fees are associated with filing, BellSouth and API will develop a cost sharing procedure. If BellSouth's permit or EPA identification number must be used, API must comply with all of BellSouth's permit conditions and environmental processes, including environmental "best management practices (BMP)" (see Section 2, below) and/or selection of BST disposition vendors and disposal sites.

1.8 Environmental and Safety Indemnification. BellSouth and API shall indemnify, defend and hold harmless the other Party from and against any claims (including, without limitation, third-party claims for personal injury or death or real or personal property damage), judgments, damages, (including direct and indirect damages, and punitive damages), penalties, fines, forfeitures, costs, liabilities, interest and losses arising in connection with the violation or alleged violation of any Applicable Law or contractual obligation or the presence or alleged presence of contamination arising out of the acts or omissions of the indemnifying Party, its agents, contractors, or employees concerning its operations at the Facility.

2. CATEGORIES FOR CONSIDERATION OF ENVIRONMENTAL ISSUES

When performing functions that fall under the following Environmental categories on BellSouth's Premises, API agrees to comply with the applicable sections of the current issue of BellSouth's Environmental and Safety Methods and Procedures (M&Ps), incorporated herein by this reference. API further agrees to cooperate with BellSouth to ensure that API's employees, agents, and/or subcontractors are knowledgeable of and satisfy those

provisions of BellSouth's Environmental M&Ps which apply to the specific Environmental function being performed by API, its employees, agents and/or subcontractors.

The most current version of reference documentation must be requested from BellSouth.

ENVIRONMENTAL CATEGORIES	ENVIRONMENTAL ISSUES	ADDRESSED BY THE FOLLOWING DOCUMENTATION
Disposal of hazardous material or other regulated material (e.g., batteries, fluorescent tubes, solvents & cleaning materials)	Compliance with all applicable local, state, & federal laws and regulations Pollution liability insurance EVET approval of contractor	• Std T&C 450 • Fact Sheet Series 17000 • Std T&C 660-3 • Approved Environmental Vendor List (Contact E/S Management)
Emergency response	Hazmat/waste release/spill firesafety emergency	• Fact Sheet Series 1700 • Building Emergency Operations Plan (EOP) (specific to and located on Premises)
Contract labor/outsourcing for services with environmental implications to be performed on BellSouth Premises (e.g., disposition of hazardous material/waste; maintenance of storage tanks)	Compliance with all applicable local, state, & federal laws and regulations Performance of services in accordance with BST's environmental M&Ps Insurance	• Std T&C 450 • Std T&C 450-B • (Contact E/S for copy of appropriate E/S M&Ps.) • Std T&C 660
Transportation of hazardous material	Compliance with all applicable local, state, & federal laws and regulations Pollution liability insurance EVET approval of contractor	• Std T&C 450 • Fact Sheet Series 17000 • Std T&C 660-3 • Approved Environmental Vendor List (Contact E/S Management)

Maintenance/operations work which may produce a waste Other maintenance work	Compliance with all application local, state, & federal laws and regulations Protection of BST employees and equipment	• Std T&C 450 • 29CFR 1910.147 (OSHA Standard) • 29CFR 1910 Subpart O (OSHA Standard)
Janitorial services	All waste removal and disposal must conform to all applicable federal, state and local regulations All Hazardous Material and Waste Asbestos notification and protection of employees and equipment	• P&SM Manager - Procurement • Fact Sheet Series 17000 • GU-BTEN-001BT, Chapter 3 • BSP 010-170-001BS (Hazcom)
Manhole cleaning	Compliance with all applicable local, state, & federal laws and regulations Pollution liability insurance EVET approval of contractor	• Std T&C 450 • Fact Sheet 14050 • BSP 620-145-011PR Issue A, August 1996 • Std T&C 660-3 • Approved Environmental Vendor List (Contact E/S Management)
Removing or disturbing building materials that may contain asbestos	Asbestos work practices	• GU-BTEN-001BT, Chapter 3

3. DEFINITIONS

Generator. Under RCRA, the person whose act produces a Hazardous Waste, as defined in 40 CFR 261, or whose act first causes a Hazardous Waste to become subject to regulation. The Generator is legally responsible for the proper management and disposal of Hazardous Wastes in accordance with regulations.

Hazardous Chemical. As defined in the U.S. Occupational Safety and Health (OSHA) hazard communication standard (29 CFR 1910.1200), any chemical which is a health hazard or physical hazard.

Hazardous Waste. As defined in section 1004 of RCRA.

Imminent Danger. Any conditions or practices at a facility which are such that a danger exists which could reasonably be expected to cause immediate death or serious harm to people or immediate significant damage to the environment or natural resources.

Spill or Release. As defined in Section 101 of CERCLA.

4. ACRONYMS

E/S – Environmental/Safety

EVET - Environmental Vendor Evaluation Team

DEC/LDEC - Department Environmental Coordinator/Local Department Environmental Coordinator

GU-BTEN-001BT - BellSouth Environmental Methods and Procedures

NESC - National Electrical Safety Codes

P&SM - Property & Services Management

Std. T&C - Standard Terms & Conditions

Attachment 5

Access to Numbers and Number Portability

TABLE OF CONTENTS

1. NON-DISCRIMINATORY ACCESS TO TELEPHONE NUMBERS 2

2. NUMBER PORTABILITY PERMANENT SOLUTION 2

3. SERVICE PROVIDER NUMBER PORTABILITY 3

4. SPNP IMPLEMENTATION 3

5. TRANSITION TO PERMANENT NUMBER PORTABILITY..... 6

6. CONVERSION POLICY 6

7. TRUE-UP 9

8. OPERATIONAL SUPPORT SYSTEM (OSS) RATES 9

Rates…….Exhibit A

ACCESS TO NUMBERS AND NUMBER PORTABILITY

1. Non-Discriminatory Access to Telephone Numbers

All the negotiated rates, terms and conditions set forth in this Attachment pertain to the provisioning of local number portability.

1.1 During the term of this Agreement, API shall contact the North American Numbering Plan Administrator, Neustar, for the assignment of numbering resources. In order to be assigned a Central Office Code, api will be required to complete the Central Office Code (NXX) Assignment Request and Confirmation Form (Code Request Form) in accordance with Industry Numbering Committee's Central Office Code (NXX) Assignment Guidelines (INC 95-0407-008).

1.2 For the purposes of the resale of BellSouth's telecommunications services by API, BellSouth will provide API with on line access to telephone numbers for reservation on a first come first served basis. Until December 1, 2000, such reservations of telephone numbers, on a pre-ordering basis shall be for a period of ninety (90) days. After December 1, 2000, BellSouth's reservation of telephone number practices shall be in accordance with the appropriate FCC rules and regulations. API acknowledges that there may be instances where there is a shortage of telephone numbers in a particular Common Language Location Identifier Code (CLLIC) and in such instances BellSouth may request that API cancel its reservations of numbers. API shall comply with such request.

1.3. Further, upon API request and for the purposes of the resale of BellSouth's telecommunications services by API, BellSouth will reserve up to 100 telephone numbers per CLLIC, for API's sole use. Such telephone number reservations shall be transmitted to API via electronic file transfer. Until December 1, 2000, such reservations shall be valid for ninety (90) days from the reservation date. After December 1, 2000, BellSouth's reservation of telephone number practices shall be in accordance with the appropriate FCC rules and regulations. API acknowledges that there may be instances where there is a shortage of telephone numbers in a particular CLLIC and in such instances BellSouth shall use its best efforts to reserve for a ninety (90) day period a sufficient quantity for API's reasonable need in that particular CLLIC.

2. Number Portability Permanent Solution

2.1 The FCC, the Commissions, and industry fora have developed and BellSouth is implementing a permanent approach to providing service provider number portability. Both Parties will implement a permanent approach as developed and approved by the Commission, the FCC and industry fora. Consistent with the requirements to move to Permanent Number Portability (PNP) as set forth in

Section 5 of this Attachment, Interim Service Provider Number Portability (SPNP) may be available only until such permanent solution is implemented in an end office.

2.2 End User Line Charge. Recovery of charges associated with implementing PNP through a monthly charge assessed to end users has been authorized by the FCC. This end user line charge will be as filed in BellSouth's FCC Tariff No. 1 and will be billed to CLEC where CLEC is a subscriber to local switching or where CLEC is a reseller of BellSouth telecommunications services. This charge will not be discounted.

3. Service Provider Number Portability

3.1 Definition. Until the industry-wide permanent solution is implemented in an end office, BellSouth shall provide Service Provider Number Portability (SPNP). SPNP is an interim service arrangement whereby an end user who switches subscription of his local exchange service from BellSouth to a CLEC, or vice versa, is permitted to retain the use of his existing assigned telephone number, provided that the end user remains at the same location for his local exchange service or changes locations and service providers but stays within the same serving wire center of his existing number.

3.2 Methods of Providing Number Portability. SPNP is available through either remote call forwarding or direct inward dialing trunks, at the election of API. Remote call forwarding (SPNP-RCF) is an existing switch-based BellSouth service that redirects calls within the telephone network. Direct inward dialing trunks (SPNP-DID) allow calls to be routed over a dedicated facility to the API switch that serves the subscriber.

3.3 Signaling Requirements. SS7 Signaling is required for the provision of SPNP services. SPNP-DID is available from BellSouth on a per DS0, DS1, or DS3 basis. Where SPNP-DID is technically feasible and is provided on a DS1 or a DS3 basis, the applicable channelization rates are those specified in Section E6 in BellSouth's Intrastate Access Tariffs, incorporated herein by this reference. SPNP is available only for basic local exchange service.

3.4 Rates

Rates for SPNP are set out in Exhibit A to this Attachment. If no rate is identified in the Attachment, the rate for the specific service or function will be as set forth in applicable BellSouth tariff or as negotiated by the Parties upon request by either Party.

4. SPNP Implementation

4.1 SPNP is available only where a CLEC or BellSouth is currently providing, or will begin providing concurrent with provision of SPNP, basic local exchange service to the affected end user. SPNP for a particular telephone number is available only

from the central office originally providing local exchange service to the end user. SPNP for a particular assigned telephone number will be disconnected when any end user, Commission, BellSouth, or CLEC initiated activity (e.g., a change in exchange boundaries) would normally result in a telephone number change had the end user retained his initial local exchange service.

4.2.1 SPNP-RCF, as contemplated by this Agreement, is a telecommunications service whereby a call dialed to an SPNP-RCF equipped telephone number is automatically forwarded to an assigned seven- or ten- digit telephone number within the local calling area as defined in BellSouth's General Subscriber Services Tariff. The forwarded-to number shall be specified by the CLEC or BellSouth, as appropriate. The forwarding Party will provide identification of the originating telephone number, via SS7 signaling, to the receiving Party. Identification of the originating telephone number to the SPNP-RCF end user cannot be guaranteed, however. SPNP-RCF provides a single call path for the forwarding of no more than one simultaneous call to the receiving Party's specified forwarded-to number.

4.2.2 SPNP-DID service, as contemplated by this Agreement, provides trunk side access to end office switches for direct inward dialing to the other Party's premises equipment from the telecommunications network to lines associated with the other Party's switching equipment and must be provided on all trunks in a group arranged for inward service. A SPNP-DID trunk termination charge, provided with SS7 Signaling only, applies for each trunk voice grade equivalent. In addition, direct facilities are required from the end office where a ported number resides to the end office serving the ported end user customer. The rates for a switched local channel and switched dedicated transport apply as contained in BellSouth's Intrastate Access Services tariff, as said tariff is amended from time to time. Transport mileage will be calculated as the airline distance between the end office where the number is ported and the Point of Interface ("POI") using the V&H coordinate method. SPNP-DID must be established with a minimum configuration of two channels and one unassigned telephone number per switch, per arrangement for control purposes. Transport facilities arranged for SPNP-DID may not be mixed with any other type of trunk group, with no outgoing calls placed over said facilities. SPNP-DID will be provided only where such facilities are available and where the switching equipment of the ordering Party is properly equipped. Where SPNP-DID service is required from more than one wire center or from separate trunk groups within the same wire center, such service provided from each wire center or each trunk group within the same wire center shall be considered a separate service. Only customer-dialed sent-paid calls will be completed to the first number of a SPNP-DID number group; however, there are no restrictions on calls completed to other numbers of a SPNP-DID number group. Sent-paid calls refer to those calls placed by an end user who physically deposits currency in a public telephone. Interface group arrangements provided for terminating the switched transport at the Party's terminal location are as set forth in of BellSouth's Intrastate Access Services Tariff, § E6.1.3.A as amended from time to time.

4.3.1 SPNP-DID Service requires ordering consecutive telephone numbers in blocks of twenty. To order non-consecutive telephone numbers or telephone numbers in less than blocks of twenty, the BFR/NBR process must be used. SS7 Signaling is required for the provision of either of these services.

4.4 The calling Party shall be responsible for payment of the applicable charges for sent-paid calls to the SPNP number. For collect, third-party, or other operator-assisted non-sent paid calls to the ported telephone number, BellSouth or the CLEC shall be responsible for the payment of charges under the same terms and conditions for which the end user would have been liable for those charges. Either Party may request that the other block collect and third party non-sent paid calls to the SPNP-assigned telephone number. If a Party does not request blocking, the other Party will provide itemized local usage detail for the billing of non-sent paid calls on the monthly bill of usage charges provided at the individual end user account level. The detail will include itemization of all billable usage. Each Party shall have the option of receiving this usage data on a daily basis via a data file transfer arrangement. This arrangement will utilize the existing industry uniform standard, known as EMI standards, for exchange of billing data. Files of usage data will be created daily for the optional service. Usage originated and recorded in the sending BellSouth RAO will be provided in unrated or rated format, depending on processing system. CLEC usage originated elsewhere and delivered via CMDS to the sending BellSouth RAO shall be provided in rated format.

4.5 Each Party shall be responsible for obtaining authorization from the end user for the handling of the disconnection of the end user's service, the provision of new local service and the provision of SPNP services. Each Party shall be responsible for coordinating the provision of service with the other to assure that its switch is capable of accepting SPNP ported traffic. Each Party shall be responsible for providing equipment and facilities that are compatible with the other's service parameters, interfaces, equipment and facilities and shall be required to provide sufficient terminating facilities and services at the terminating end of an SPNP call to adequately handle all traffic to that location and shall be solely responsible to ensure that its facilities, equipment and services do not interfere with or impair any facility, equipment, or service of the other Party or any of its end users. In the event that either Party determines in its reasonable judgment that the other Party will likely impair or is impairing, or interfering with any equipment, facility or service or any of its end users, that Party may either refuse to provide SPNP service or may terminate SPNP service to the other Party after providing appropriate notice.

4.6 Each Party shall be responsible for providing an appropriate intercept announcement service for any telephone numbers subscribed to SPNP services for which it is not presently providing local exchange service or terminating to an end user. Where either Party chooses to disconnect or terminate any SPNP service, that Party shall be responsible for designating the preferred standard type of announcement to be provided.

4.7 Each Party shall be the other Party's single point of contact for all repair calls on behalf of each Party's end user. Each Party reserves the right to contact the other Party's customers if deemed necessary for maintenance purposes.

4.8 Neither Party shall be responsible for adverse effects on any service, facility or equipment from the use of SPNP services. End-to-end transmission characteristics may vary depending on the distance and routing necessary to complete calls over SPNP facilities and the fact that another carrier is involved in the provisioning of service. Therefore, end-to-end transmission characteristics cannot be specified by either Party for such calls. Neither Party shall be responsible to the other if any necessary change in protection criteria or in any of the facilities, operation, or procedures of either renders any facilities provided by the other Party obsolete or renders necessary modification of the other Party's equipment.

4.9 For terminating IXC traffic ported to either Party which requires use of either Party's tandem switching, the tandem provider will bill the IXC tandem switching, the interconnection charge, and a portion of the transport, and the other Party will bill the IXC local switching, the carrier common line and a portion of the transport. If the tandem provider is unable to provide the necessary access records to permit the other Party to bill the IXC directly for terminating access to ported numbers, then the tandem provider will bill the IXC full terminating switched access charges at the tandem provider's rate and will compensate the other Party at the tandem Party's tariff rates via a process used by BellSouth to estimate the amount of ported switched access revenues due the other Party. If an intraLATA toll call is delivered, the delivering Party will pay terminating access rates to the other Party. This subsection does not apply in cases where SPNP-DID is utilized for number portability.

5. Transition to Permanent Number Portability

5.1 Once PNP is implemented in an end office both Parties must withdraw their SPNP offerings. The transition from existing SPNP arrangements to PNP shall occur within one hundred twenty (120) days from the date PNP is implemented in the end office. Neither Party shall charge the other Party for conversion from SPNP to PNP. The Parties shall comply with any SPNP/PNP transition processes established by the FCC and State commissions and appropriate industry number portability work groups.

5.1.1 Notwithstanding the foregoing, the Parties acknowledge that the FCC has determined once PNP has been deployed pursuant to the FCC's orders, rules and regulations, that all local exchange carriers (LECs) have the duty to provide PNP. Therefore, either Party, at any time, may seek appropriate legal or regulatory relief concerning the transition from SPNP to PNP or other related issues.

6. Conversion Policy

6.1 BellSouth implemented the conversion of Interim Number Portability (INP) to Local Number Portability (PNP) as follows:

6.1.1 Conversion of SPNP numbers to PNP is handled as a project.

6.1.2 All SPNP numbers in PNP capable switches will be converted to PNP within 120 days after the end of the phase for that MSA or wire center.

6.1.3 BellSouth will continue to offer SPNP until the completion date of the phase for the wire center.

6.2 Conversion Schedule

6.2.1 The schedule to implement PNP in the 21 MSAs in the BellSouth region is as mandated by the FCC may be viewed by accessing the Carrier Notification Web site. The notification also outlines the conversion schedule for all of BellSouth's switches.

6.3 Specific Conversion activities

6.3.1 The BellSouth Account Teams contact each CLEC with SPNP accounts to negotiate a conversion schedule.

6.3.2 During the 120-day conversion period for each MSA, the Local Carrier Service Center (LCSC) will provide special handling for the requests to convert SPNP to PNP. These requests will be logged by a project manager and project managed to ensure end user service outage is minimal. Unless listing changes are requested, the CLECs may use a specially designed form provided by the project manager or account team in lieu of the Local Service Request (LSR), End User (EU), and Number Portability (NP) forms.

6.3.3 If changes are to be made to the SPNP account, the LSR should follow the normal process flow for ordering instead of the SPNP to PNP conversion plan.

6.4 Firm Order Confirmation

6.4.1 During the conversion period, if a CLEC uses the request form in lieu of the LSR, the form will include provisions for providing a manual FOC. If the request is submitted through EDI, the FOC will be sent back to the CLEC via EDI.

6.5 Routing of Calls to the Local Routing Number (LRN)

6.5.1 Trigger orders are not used for SPNP telephone numbers. Once the activate message is sent to the Number Portability Administration Center (NPAC) by the new service provider, (with exception of the end user's serving wire center) incoming calls are routed to the new provider. Calls from within the end user's servicing wire center will not route to the new Local Routing Number (LRN) until the porting D order processes.

6.6 Permanent Number Solution

6.6.1 BellSouth and API will adhere to the process flows and cutover guidelines outlined in the LNP Reference Guide accessible via the Internet at the following site: http://www.interconnection.bellsouth.com.

6.6.1.1 BellSouth and API will work cooperatively to implement changes to PNP process flows ordered by the FCC or as recommended by standard industry fora addressing PNP.

6.6.1.2 Both Parties shall cooperate in the process of porting numbers form one carrier to another so as to limit service outage for the ported subscriber. BellSouth will set LRN unconditional or 10-digit triggers where applicable which should ensure no interruption to the end user. Where triggers are set, BellSouth removes the ported number at the same time the trigger is removed.

6.6.1.2.1 Trigger orders as used in this Attachment refer to a service order issued in advance of the porting of a number utilizing PNP that provides the following: initiates call queries to the AIN SS7 network in advance of the number being ported; and provides for the CLEC to be in control of when a number ports to the new service provider.

6.6.1.3 For porting of numbers where triggers are not set, the Parties shall coordinate the porting of the number between service providers so as to minimize service interruptions to the end user.

6.6.1.4 BellSouth will provide ordering support for API's PNP requests Monday through Friday 8:00 AM until 8:00 PM EST. BellSouth normal hours of operation for provisioning support are defined in Attachment 6. Ordering and provisioning support required by API outside of these hours will be considered outside of normal business hours and will be subject to overtime billing. For stand alone PNP where LRN unconditional or 10-digit triggers are set, CLEC may port numbers during times that are supported by NPAC 24 hours a day 7 days a week. BellSouth will provide maintenance assistance to CLEC 24 hours a day 7 days a week to resolve issues arising from the porting of numbers for problems isolated to the BellSouth network.

6.6.1.5 Performance Measurements for BellSouth providing PNP are located in Attachment 9 to this Agreement, incorporated herein by this reference.

6.6.2 BellSouth will use best efforts to update switch translations, where necessary, in time frames that are consistent with the time frames BellSouth's end users experience or as offered to other CLECs.

6.6.3 CLEC may request deployment of PNP according to and pursuant to the rules and regulations set forth in 47 CFR § 52.23.

7. True-up

7.1 **This section applies only to Tennessee and other rates that are interim or expressly subject to true-up under this attachment.**

7.2 The interim prices for Network Elements and Other Services and Local Interconnection shall be subject to true-up according to the following procedures:

7.3 The interim prices shall be trued-up, either up or down, based on final prices determined either by further agreement between the Parties, or by a final order (including any appeals) of the Commission which final order meets the criteria of (3) below. The Parties shall implement the true-up by comparing the actual volumes and demand for each item, together with interim prices for each item, with the final prices determined for each item. Each Party shall keep its own records upon which the true-up can be based, and any final payment from one Party to the other shall be in an amount agreed upon by the Parties based on such records. In the event of any disagreement as between the records or the Parties regarding the amount of such true-up, the Parties agree that the body having jurisdiction over the matter shall be called upon to resolve such differences, or the Parties may mutually agree to submit the matter to the Dispute Resolution process in accordance with the provisions in the General Terms and Conditions and Attachment 1 of this Agreement.

7.4 The Parties may continue to negotiate toward final prices, but in the event that no such agreement is reached within nine (9) months, either Party may petition the Commission to resolve such disputes and to determine final prices for each item. Alternatively, upon mutual agreement, the Parties may submit the matter to the Dispute Resolution Process set forth in the General Terms and Conditions and Attachment 1 of the Agreement incorporated herein by reference, so long as they file the resulting Agreement with the Commission as a "negotiated Agreement" under Section 252(e) of the Act.

7.5 An effective order of the Commission that forms the basis of a true-up shall be based upon cost studies submitted by either or both Parties to the Commission and shall be binding upon BellSouth and API specifically or upon all carriers generally, such as a generic cost proceeding.

8. Operational Support System (OSS) Rates

The terms, conditions and rates for OSS are as set forth in Section 2 of Attachment 2.

BELLSOUTH/API RATES
SERVICE PROVIDER
NUMBER PORTABILITY

		RATES BY STATE								
DESCRIPTION	**USOC**	**AL**	**FL**	**GA**	**KY**	**LA**	**MS**	**NC**	**SC**	**TN**
INTERIM SERVICE PROVIDER NUMBER PORTABILITY - RCF (1) (2)										
RCF, per number ported (Business Line), 10 paths	TNPBL	NA	NA	NA	NA	NA	NA	$2.25	NA	NA
RCF, per number ported (Residence Line), 6 paths	TNPRL	NA	NA	NA	NA	NA	NA	$1.15	NA	NA
RCF, per number ported (Business Line)	TNPBL	$2.13	NA	$2.03	NA	$2.29	$2.34	$1.66	$2.17	$1.50
NRC - Electronic	TNPBL	$0.65	NA	$0.51	NA	$0.49	$0.6441	$0.71	$0.7046	NA
NRC - Disconnect Charge	TNPBL	$0.07	NA	NA	NA	$0.05	$0.0644	$0.50	NA	NA
RCF, per number ported (Residence Line)	TNPRL	$2.13	NA	$2.03	NA	$2.29	$2.34	$1.66	$2.17	$1.25
NRC	TNPRL	$0.65	NA	$0.51	NA	$0.49	$0.6441	$0.71	$0.7046	NA
NRC - Disconnect Charge	TNPRL	$0.07	NA	NA	NA	$0.05	$0.0644	$0.50	NA	NA
RCF, add'l capacity for simultaneous call forwarding, per additional path	N/A	$0.32	NA	$0.2836	NA	$0.38	$0.3838	$0.32	$0.3854	$0.50
RCF, per service order, per location	(++) Bus = TNPBD Res = TNPRD									
NRC - 1st	TNP++	$1.44	NA	$2.10	NA	$2.02	$2.84	$2.73	$1.37	$25.00
NRC - Add'l	TNP++	$1.44	NA	$2.10	NA	$2.02	$2.84	$2.73	$1.37	$25.00
NRC - Disconnect - 1st	TNP++	$1.44	NA	NA	NA	$2.01	$2.84	NA	NA	NA
NRC - Disconnect - Add'l	TNP++	$1.44	NA	NA	NA	$2.01	$2.84	NA	NA	NA
NRC - Incremental Charge - Manual Service Order - 1st	SOMAN	$27.37	NA	NA	NA	$18.14	$25.52	$45.80	NA	NA
NRC - Incremental Charge - Manual Service Order - Add'l	SOMAN	$27.37	NA	NA	NA	$18.14	$25.52	$45.80	NA	NA
NRC - Incremental Charge - Manual Service Order - Disconnect - 1st	SOMAN	$17.77	NA	NA	NA	$11.41	$16.06	NA	$44.70	NA
NRC - Incremental Charge - Manual Service Order - Disconnect - Add'l	SOMAN	$17.77	NA	NA	NA	$11.41	$16.06	NA	$44.70	NA
INTERIM SERVICE PROVIDER NUMBER PORTABILITY - DID										
DID per number ported, Residence - NRC	TNPDR	$1.18	NA	$0.93	NA	$0.89	$1.17	$2.25	$2.25	NA
DID per number ported, Residence - NRC - Disconnect	TNPDR	$1.18	NA	NA	NA	$0.90	$1.17	NA	NA	NA
DID per number ported, Business - NRC	TNPDB	$1.18	NA	$0.93	NA	$0.89	$1.17	$2.25	$2.25	NA
DID per number ported, Business - NRC - Disconnect	TNPDB	$1.18	NA	NA	NA	$0.90	$1.17	NA	NA	NA
DID per service order, per location										
NRC - 1st	TNPRD	$1.44	NA	$2.10	NA	$2.02	$2.84	$2.73	$1.37	NA
NRC - Add'l	TNPRD	$1.44	NA	$2.10	NA	$2.02	$2.84	$2.73	$1.37	NA
NRC - Disconnect - 1st	TNPRD	$1.44	NA	NA	NA	$2.01	$2.84	NA	$44.70	NA
NRC - Disconnect - Add'l	TNPRD	$1.44	NA	NA	NA	$2.01	$2.84	NA	$44.70	NA
NRC - Incremental Charge - Manual Service Order - 1st	SOMAN	$27.37	NA	$18.94	NA	$18.14	$25.52	$45.80	NA	NA
NRC - Incremental Charge - Manual Service Order - Add'l	SOMAN	$27.37	NA	NA	NA	$18.14	$25.52	$45.80	NA	NA
NRC - Incremental Charge - Manual Service Order - Disconnect - 1st	SOMAN	$17.77	NA	NA	NA	$11.41	$16.06	NA	NA	NA
NRC - Incremental Charge - Manual Service Order - Disconnect - Add'l	SOMAN	$17.77	NA	NA	NA	$11.41	$16.06	NA	NA	NA
DID, per trunk termination, Initial	TNPT2	$11.84	NA	$10.73	NA	$12.46	$13.78	$11.43	$13.16	NA
DID, per trunk termination, Initial - NRC	TNPT2	$173.73	NA	$135.47	NA	$129.69	$171.68	$217.88	$218.03	NA
DID, per trunk termination, Initial - Disconnect	TNPT2	$50.43	NA	NA	NA	$37.85	$49.86	NA	NA	NA
DID, per trunk termination, Subsequent	TNPT2	$11.84	NA	$10.73	NA	$12.46	$13.78	$11.43	$13.16	NA
DID, per trunk termination, Subsequent - NRC	TNPT2	$51.35	NA	$39.53	NA	$37.85	$50.69	$73.56	$73.63	NA
DID, per trunk termination, Subsequent - Disconnect	TNPT2	$25.00	NA	NA	NA	$18.75	$24.71	NA	NA	NA

NOTES:

If no rate is identified in the contract, the rate for the specific service or function will be as set forth in applicable BellSouth tariff or as negotiated by the Parties upon request by either Party.

1 Until the FCC issues its order implementing a cost recovery mechanism for permanent number portability, the Company will track its costs of providing interim SPNP with sufficient detail to verify the costs. This will facilitate the Florida PSCs consideration of the recovery of these costs in Docket 950737-TP. (FL)

2 BellSouth and CLEC will each bear their own costs of providing remote call forwarding as an interim number portability option. (KY)

Attachment 6

Pre-Ordering, Ordering and Provisioning, Maintenance and Repair

TABLE OF CONTENTS

1. QUALITY OF PRE-ORDERING, ORDERING AND PROVISIONING, MAINTENANCE AND REPAIR 3

2. ACCESS TO OPERATIONS SUPPORT SYSTEMS 4

3. MISCELLANEOUS ORDERING AND PROVISIONING GUIDELINES 5

PRE-ORDERING, ORDERING AND PROVISIONING, MAINTENANCE AND REPAIR

1. Quality of Pre-Ordering, Ordering and Provisioning, Maintenance and Repair

1.1 All the negotiated terms and conditions set forth in this Attachment pertain to pre-ordering, ordering and provisioning and maintenance and repair.

1.2 BellSouth shall provide pre-ordering, ordering and provisioning and maintenance and repair services to API that are equivalent to the pre-ordering, ordering and provisioning and maintenance and repair services BellSouth provides to itself or any other CLEC, where technically feasible. The guidelines for pre-ordering, ordering and provisioning and maintenance and repair are set forth in the various guides and business rules, as appropriate, and as they are amended from time to time during this Agreement. The guides and business rules may be referenced at the following site:

http://www.interconnection.bellsouth.com.

1.3 For purposes of this Agreement, BellSouth's regular working hours for provisioning are defined as follows:

Monday – Friday – 8:00 a.m. – 5:00 p.m. (Excluding Holidays)
(Resale/UNE non-coordinated, coordinated orders and order coordinated-time specific)

Saturday - 8:00 a.m. – 5:00 p.m. (Excluding Holidays)
(Resale/UNE non-coordinated orders)

The above hours represent the hours, either Eastern or Central Time, of where the physical work is being performed.

1.3.1 It is understood and agreed that BellSouth technicians involved in provisioning service to API may work shifts outside of BellSouth's regular working hours as defined in Section 1.3 above. To the extent that API requests that work necessarily required in the provisioning of service to be performed outside BellSouth's regular working hours and that work is performed by a BellSouth technician during his or her scheduled shift such that BellSouth does not incur any additional costs in performing the work on behalf of API, BellSouth will not assess API additional charges beyond the rates and charges specified in this Agreement.

1.4 All other API requests for provisioning and installation services are considered outside of the normal hours of operation and may be performed subject to the application of overtime billing charges.

2. Access to Operations Support Systems

2.1 BellSouth shall provide API access to operations support systems ("OSS") functions for pre-ordering, ordering and provisioning, maintenance and repair and billing. Access to the OSS is available through a variety of means, including electronic interfaces. BellSouth also provides manual interfaces. The OSS functions available to CLECs through the electronic interfaces are:

2.1.1 Pre-Ordering. BellSouth provides electronic access to the following pre-ordering functions: service address validation, telephone number selection, service and feature availability, due date information, and upon Commission approval of confidentiality protections, to customer record information. Access is provided through the Local Exchange Navigation System (LENS) interface and the Telecommunications Access Gateway (TAG) interface. Customer Record Information includes but is not limited to, customer specific information in CRIS and RSAG. In addition, API shall provide to BellSouth access to customer record information including electronic access where available. Otherwise, API shall provide paper copies of customer record information within the same intervals that BellSouth provides paper copies to API. The Parties agree not to view, copy, or otherwise obtain access to the customer record information of any customer without that customer's permission and further agree that API and BellSouth will obtain access to customer record information only in strict compliance with applicable laws, rules, or regulations of the State in which the service is provided.

2.1.2 Service Ordering and Provisioning. BellSouth provides electronic options for the exchange of ordering and provisioning information. BellSouth provides an Electronic Data Interchange (EDI) interface, and the TAG ordering interface for non-complex and certain complex resale requests and certain network elements. The EDI interface or the TAG ordering interface may be integrated with the TAG pre-ordering interface by API. BellSouth provides integrated pre-ordering, ordering and provisioning capability through the LENS interface for non-complex and certain complex resale service requests and certain network element requests.

2.1.3 Service Trouble Reporting and Repair (a.k.a Maintenance and Repair). Service trouble reporting and repair allows API to report and monitor service troubles and obtain repair services. BellSouth shall offer API service trouble reporting in a non-discriminatory manner that provides API the equivalent ability to report and monitor service troubles that BellSouth provides to itself. BellSouth also provides API an estimated time to repair, an appointment time or a commitment time, as appropriate, on trouble reports. BellSouth provides several options for electronic trouble reporting. For exchange services, BellSouth offers API non-discriminatory access to the Trouble Analysis Facilitation Interface (TAFI). In addition, BellSouth offers an industry standard, machine-to-machine Electronic Communications Trouble Administration (ECTA) Gateway interface. For designed services, BellSouth provides non-discriminatory trouble reporting via the ECTA Gateway. BellSouth also offers ECTA functionality through the machine-to-machine EC-CPM/TA interface. If API requests BellSouth to repair a trouble

after normal working hours, API will be billed the appropriate overtime charges associated with this request pursuant to BellSouth's tariffs. BellSouth and API agree to adhere to BellSouth's Operational Understanding and as it is amended from time to time during this Agreement which may be accessed via the Internet @ http://www.interconnection.bellsouth.com

2.2 Change Management. BellSouth provides a collaborative process for change management of the electronic interfaces through the Change Control Process (CCP). Guidelines for this process are set forth in the CCP document and as it is amended from time to time during this Agreement.

2.3 BellSouth's Versioning Policy for Industry Standard Machine-to-Machine Electronic Interfaces. Pursuant to the CCP, BellSouth will issue new software releases for new industry standards for its industry standard, machine-to-machine and its human-to-machine electronic interfaces. When a new release of new industry standards is implemented, BellSouth will continue to support both the new release (N) and the prior release (N-1). When BellSouth implements the next release (N+1), BellSouth will eliminate support for the (N-1) release and support the two newest releases (N and N+1). Thus, BellSouth will always support the two most current releases. BellSouth will issue documents to API with sufficient notice to allow API to make the necessary changes to their systems and operations to migrate to the newest release in a timely fashion. This policy is set forth in the CCP document and as it is amended from time to time during this Agreement.

2.4 Rates. All costs incurred by BellSouth to develop and implement operational interfaces to the OSS shall be recovered from the carriers that use the services. Charges for use of OSS shall be as set forth in Attachments 1 and 2 of this Agreement.

3. Miscellaneous Ordering and Provisioning Guidelines

3.1 Pending Orders. To ensure the most efficient use of facilities and resources, orders placed in the hold or pending status by API will be held for a maximum of thirty (30) days from the date the order is placed on hold. After such time, if API wishes to reinstate an order, API may be required to submit a new service order.

3.2 Single Point of Contact. API will be the single point of contact with BellSouth for ordering activity for network elements and other services used by API to provide services to its end users, except that BellSouth may accept an order directly from another CLEC, or BellSouth, acting with authorization of the affected end user. API and BellSouth shall each execute a blanket letter of authorization with respect to customer orders. The Parties shall each be entitled to adopt their own internal processes for verification of customer authorization for orders, provided, however, that such processes shall comply with applicable state and federal law including, until superseded, the FCC guidelines and orders

applicable to Presubscribed Interexchange Carrier (PIC) changes including Un-PIC. Pursuant to such an order, BellSouth may disconnect any network element associated with the service to be disconnected and being used by API to provide service to that end user and reuse such network elements or facilities to enable such other LEC to provide service to the end user. BellSouth will notify API that such an order has been processed, but will not be required to notify API in advance of such processing.

3.3 Use of Facilities. When a customer of a CLEC elects to discontinue service and transfer service to another local exchange carrier, including BellSouth, BellSouth shall have the right to reuse the facilities provided to CLEC by BellSouth for retail or resale service, loop and/or port for that customer. In addition, BellSouth may disconnect and reuse facilities when the facility is in a denied state and BellSouth has received an order to establish new service or transfer of service from a customer or a customer's CLEC at the same address served by the denied facility.

3.3.1 Upon receipt of a service order, BellSouth will do the following:

3.3.1.1 Process disconnect and reconnect orders to provision the service which shall be due dated using current interval guidelines.

3.3.1.2 Reuse the serving facility for the retail, resale service, or network element at the same location.

3.3.1.3 Notify API after the disconnect order has been completed.

3.4 Release of Facilities. When a customer of API or BellSouth elects to change his/her carrier to the other Party, the Party providing service shall release the subscriber's service to the other Party concurrent with the due date of the service order, which shall be established based on the standard interval for the subscriber's requested service as set forth in the BellSouth Product and Services Interval Guide.

3.5 Contact Numbers. The Parties agree to provide one another with toll-free nation-wide (50 states) contact numbers for the purpose of ordering, provisioning and maintenance of services.

3.6 Subscription Functions. In cases where BellSouth performs subscription functions for an inter-exchange carrier (i.e. PIC and LPIC changes via Customer Account Record Exchange (CARE)), BellSouth will provide the affected inter-exchange carriers with the Operating Company Number (OCN) of the local provider for the purpose of obtaining end user billing account and other end user information required under subscription requirements.

3.7 Cancellation Charges. If API cancels an order for network elements or other services, any costs incurred by BellSouth in conjunction with the provisioning of that order will be recovered in accordance with FCC No. 1 Tariff, Section 5.

3.8 Expedite Charges. For expedited requests by API, expedited charges will apply for intervals less than the standard interval as outlined in the BellSouth Product and Services Interval Guide. The charges as outlined in BellSouth's FCC No. 1 Tariff, Section 5, will apply.

Attachment 7

Billing

TABLE OF CONTENTS

1. Payment and Billing Arrangements 3

2. Billing Disputes.....5

3. RAO Hosting.....6

4. Optional Daily Usage File.....10

5. Access Daily Usage File.....13

Rates……Exhibit A

BILLING

1. Payment and Billing Arrangements

All negotiated rates, terms and conditions set forth in this Attachment pertain to billing and billing accuracy certifications.

1.1 Billing. BellSouth agrees to provide billing through the Carrier Access Billing System (CABS) and through the Customer Records Information System (CRIS) depending on the particular service(s) that API requests. BellSouth will bill and record in accordance with this Agreement those charges API incurs as a result of API purchasing from BellSouth Network Elements and Other Services as set forth in this Agreement. BellSouth will format all bills in CBOS Standard or CLUB/EDI format, depending on the type of service ordered. For those services where standards have not yet been developed, BellSouth's billing format will change as necessary when standards are finalized by the industry forum.

1.1.1 For any service(s) BellSouth orders from API, API shall bill BellSouth in CABS format.

1.1.2 If either Party requests multiple billing media or additional copies of bills, the Billing Party will provide these at a reasonable cost.

1.2 Master Account. After receiving certification as a local exchange company from the appropriate regulatory agency, API will provide the appropriate BellSouth account manager the necessary documentation to enable BellSouth to establish a master account for Local Interconnection, Network Elements and Other Services, and/or resold services. Such documentation shall include the Application for Master Account, proof of authority to provide telecommunications services, an Operating Company Number (OCN) assigned by the National Exchange Carriers Association (NECA), Carrier Identification Code (CIC), Group Access Code (GAC), Access Customer Name and Abbreviation (ACNA) and a tax exemption certificate, if applicable.

1.3 Payment Responsibility. Payment of all charges will be the responsibility of API. API shall make payment to BellSouth for all services billed. BellSouth is not responsible for payments not received by API from API's customer. BellSouth will not become involved in billing disputes that may arise between API and API's customer. Payments made to BellSouth as payment on account will be credited to an accounts receivable master account and not to an end user's account.

1.4 Payment Due. The payment will be due on or before the next bill date (i.e., same date in the following month as the bill date) and is payable in immediately available funds. Payment is considered to have been made when received by BellSouth.

If the payment due date falls on a Sunday or on a Holiday which is observed on a Monday, the payment due date shall be the first non-Holiday day following such Sunday or Holiday. If the payment due date falls on a Saturday or on a Holiday which is observed on Tuesday, Wednesday, Thursday, or Friday, the payment due date shall be the last non-Holiday day preceding such Saturday or Holiday. If payment is not received by the payment due date, a late payment penalty, as set forth in Section 1.6, below, shall apply.

1.5 Tax Exemption. Upon proof of tax exempt certification from API, the total amount billed to API will not include those taxes or fees for which the CLEC is exempt. API will be solely responsible for the computation, tracking, reporting and payment of all taxes and like fees associated with the services provided to the end user of API.

1.6 Late Payment. If any portion of the payment is received by BellSouth after the payment due date as set forth preceding, or if any portion of the payment is received by BellSouth in funds that are not immediately available to BellSouth, then a late payment penalty shall be due to BellSouth. The late payment penalty shall be the portion of the payment not received by the payment due date times a late factor and will be applied on a per bill basis. The late factor shall be as set forth in Section A2 of the General Subscriber Services Tariff, Section B2 of the Private Line Service Tariff or Section E2 of the Intrastate Access Tariff, whichever BellSouth determines is appropriate. API will be charged a fee for all returned checks as set forth in Section A2 of the General Subscriber Services Tariff or pursuant to the applicable state law.

1.7 Discontinuing Service to API. The procedures for discontinuing service to API are as follows:

1.7.1 BellSouth reserves the right to suspend or terminate service for nonpayment of services or in the event of prohibited, unlawful or improper use of BellSouth facilities or service or any other violation or noncompliance by API of the rules and regulations contained in BellSouth's tariffs.

1.7.2 If payment of account is not received by the bill date in the month after the original bill date, BellSouth may provide written notice to API that additional applications for service will be refused and that any pending orders for service will not be completed if payment is not received by the fifteenth day following the date of the notice. In addition, BellSouth may, at the same time, give thirty (30)days notice to API at the billing address to discontinue the provision of existing services to API at any time thereafter.

1.7.3 In the case of such discontinuance, all billed charges, as well as applicable termination charges, shall become due.

1.7.4 If BellSouth does not discontinue the provision of the services involved on the date specified in the thirty days notice and API's noncompliance continues, nothing contained herein shall preclude BellSouth's right to discontinue the provision of the services to API without further notice.

1.7.5 If payment is not received or satisfactory arrangements made for payment by the date given in the written notification, API's services will be discontinued. Upon discontinuance of service on API's account, service to API's end users will be denied. BellSouth will reestablish service at the request of the end user or API for BellSouth to reestablish service upon payment of the appropriate connection fee and subject to BellSouth's normal application procedures. API is solely responsible for notifying the end user of the proposed service disconnection. If within fifteen (15) days after an end user's service has been denied and no arrangements to reestablish service have been made consistent with this subsection, the end user's service will be disconnected.

1.8 Deposit Policy. When purchasing services from BellSouth, API will be required to complete the BellSouth Credit Profile and provide information regarding credit worthiness. Based on the results of the credit analysis, BellSouth reserves the right to secure the account with a suitable form of security deposit. Such security deposit shall take the form of cash, an Irrevocable Letter of Credit (BellSouth form), Surety Bond (BellSouth form) or, in its sole discretion, some other form of security. Any such security deposit shall in no way release API from its obligation to make complete and timely payments of its bill. Such security shall be required prior to the inauguration of service. If, in the sole opinion of BellSouth, circumstances so warrant and/or gross monthly billing has increased beyond the level initially used to determine the level of security, BellSouth reserves the right to request additional security and/or file a Uniform Commercial Code (UCC1) security interest in API's "accounts receivables and proceeds." Interest on a security deposit, if provided in cash, shall accrue and be paid in accordance with the terms in the appropriate BellSouth tariff.

1.9 Rates. Rates for Optional Daily Usage File (ODUF), Access Daily Usage File (ADUF), and Centralized Message Distribution Service (CMDS) are set out in Exhibit A to this Attachment. If no rate is identified in this Attachment, the rate for the specific service or function will be as set forth in applicable BellSouth tariff or as negotiated by the Parties upon request by either Party.

2. Billing Disputes

2.1 Billing disputes shall be handled pursuant to the terms of this section.

2.1.1 Each Party agrees to notify the other Party in writing upon the discovery of a billing dispute. In the event of a billing dispute, the Parties will endeavor to resolve the dispute within sixty (60) calendar days of the notification date.

2.2 If a Party disputes a charge and does not pay such charge by the payment due date, or if a payment or any portion of a payment is received by either Party after the payment due date, or if a payment or any portion of a payment is received in funds which are not immediately available to the other Party, then a late payment penalty shall be assessed. For bills rendered by either Party for payment, the late payment charge for both Parties shall be calculated based on the portion of the payment not received by the payment due date times the late factor as set forth in the following BellSouth tariffs: for services purchased from the General Subscribers Services Tariff for purposes of resale and for ports and non-designed loops, Section A2 of the General Subscriber Services Tariff; for services purchased from the Private Line Tariff for purposes of resale, Section B2 of the Private Line Service Tariff; and for network elements and other services and local interconnection charges, Section E2 of the Access Service Tariff. In no event, however, shall interest be assessed by either Party on any previously assessed late payment charges. The Parties shall assess interest on previously assessed late payment charges only in a state where it has the authority pursuant to its tariffs.

3. RAO Hosting

3.1 RAO Hosting, Calling Card and Third Number Settlement System (CATS) and Non-Intercompany Settlement System (NICS) services provided to API by BellSouth will be in accordance with the methods and practices regularly adopted and applied by BellSouth to its own operations during the term of this Agreement, including such revisions as may be made from time to time by BellSouth.

3.2 API shall furnish all relevant information required by BellSouth for the provision of RAO Hosting, CATS and NICS.

3.3 Compensation amounts, if applicable, will be billed by BellSouth to API on a monthly basis in arrears. Amounts due from one Party to the other (excluding adjustments) are payable within thirty (30) days of receipt of the billing statement.

3.4 API must have its own unique hosted RAO code. Requests for establishment of RAO status where BellSouth is the selected CMDS interfacing host, require written notification from API to the BellSouth RAO Hosting coordinator at least eight (8) weeks prior to the proposed effective date. The proposed effective date will be mutually agreed upon between the Parties with consideration given to time necessary for the completion of required Telcordia (formerly BellCore) functions. BellSouth will request the assignment of an RAO code from its connecting

contractor, currently Telcordia (formerly BellCore), on behalf of API and will coordinate all associated conversion activities.

3.5 BellSouth will receive messages from API that are to be processed by BellSouth, another LEC or CLEC in the BellSouth region or a LEC outside the BellSouth region.

3.6 BellSouth will perform invoice sequence checking, standard EMI format editing, and balancing of message data with the EMI trailer record counts on all data received from API.

3.7 All data received from API that is to be processed or billed by another LEC or CLEC within the BellSouth region will be distributed to that LEC or CLEC in accordance with the Agreement(s) which may be in effect between BellSouth and the involved LEC or CLEC.

3.8 All data received from API that is to be placed on the CMDS network for distribution outside the BellSouth region will be handled in accordance with the agreement(s) which may be in effect between BellSouth and its connecting contractor (currently Telcordia (formerly BellCore)).

3.9 BellSouth will receive messages from the CMDS network that are destined to be processed by API and will forward them to API on a daily basis.

3.10 Transmission of message data between BellSouth and API will be via CONNECT:Direct.

3.11 All messages and related data exchanged between BellSouth and API will be formatted in accordance with accepted industry standards for EMI formatted records and packed between appropriate EMI header and trailer records, also in accordance with accepted industry standards.

3.12 API will ensure that the recorded message detail necessary to recreate files provided to BellSouth will be maintained for back-up purposes for a period of three (3) calendar months beyond the related message dates.

3.13 Should it become necessary for API to send data to BellSouth more than sixty (60) days past the message date(s), API will notify BellSouth in advance of the transmission of the data. If there will be impacts outside the BellSouth region, BellSouth will work with its connecting contractor and API to notify all affected Parties.

3.14 In the event that data to be exchanged between the two Parties should become lost or destroyed, both Parties will work together to determine the source of the problem. Once the cause of the problem has been jointly determined and the responsible Party (BellSouth or API) identified and agreed to, the company responsible for creating the data (BellSouth or API) will make every effort to have

the affected data restored and retransmitted. If the data cannot be retrieved, the responsible Party will be liable to the other Party for any resulting lost revenue. Lost revenue may be a combination of revenues that could not be billed to the end users and associated access revenues. Both Parties will work together to estimate the revenue amount based upon historical data through a method mutually agreed upon. The resulting estimated revenue loss will be paid by the responsible Party to the other Party within three (3) calendar months of the date of problem resolution, or as mutually agreed upon by the Parties.

3.15 Should an error be detected by the EMI format edits performed by BellSouth on data received from API, the entire pack containing the affected data will not be processed by BellSouth. BellSouth will notify API of the error condition. API will correct the error(s) and will resend the entire pack to BellSouth for processing. In the event that an out-of-sequence condition occurs on subsequent packs, API will resend these packs to BellSouth after the pack containing the error has been successfully reprocessed by BellSouth.

3.16 In association with message distribution service, BellSouth will provide API with associated intercompany settlements reports (CATS and NICS) as appropriate.

3.17 In no case shall either Party be liable to the other for any direct or consequential damages incurred as a result of the obligations set out in this Agreement.

3.18 <u>RAO Compensation</u>

3.18.1 Rates for message distribution service provided by BellSouth for API are as set forth in Exhibit A to this Attachment.

3.18.2 Rates for data transmission associated with message distribution service are as set forth in Exhibit A to this Attachment.

3.18.3 Data circuits (private line or dial-up) will be required between BellSouth and API for the purpose of data transmission. Where a dedicated line is required, API will be responsible for ordering the circuit, overseeing its installation and coordinating the installation with BellSouth. API will also be responsible for any charges associated with this line. Equipment required on the BellSouth end to attach the line to the mainframe computer and to transmit successfully ongoing will be negotiated on a case by case basis. Where a dial-up facility is required, dial circuits will be installed in the BellSouth data center by BellSouth and the associated charges assessed to API. Additionally, all message toll charges associated with the use of the dial circuit by API will be the responsibility of API. Associated equipment on the BellSouth end, including a modem, will be negotiated on a case by case basis between the Parties.

3.18.4 All equipment, including modems and software, that is required on the API end for the purpose of data transmission will be the responsibility of API.

3.19 Intercompany Settlements Messages

3.19.1 This Section addresses the settlement of revenues associated with traffic originated from or billed by API as a facilities based provider of local exchange telecommunications services outside the BellSouth region. Only traffic that originates in one Bell operating territory and bills in another Bell operating territory is included. Traffic that originates and bills within the same Bell operating territory will be settled on a local basis between API and the involved company(ies), unless that company is participating in NICS.

3.19.2 Both traffic that originates outside the BellSouth region by API and is billed within the BellSouth region, and traffic that originates within the BellSouth region and is billed outside the BellSouth region by API, is covered by this Agreement (CATS). Also covered is traffic that either is originated by or billed by API, involves a company other than API, qualifies for inclusion in the CATS settlement, and is not originated or billed within the BellSouth region (NICS).

3.19.3 Once API is operating within the BellSouth territory, revenues associated with calls originated and billed within the BellSouth region will be settled via Telcordia (formerly BellCore)'s, its successor or assign, NICS system.

3.19.4 BellSouth will receive the monthly NICS reports from Telcordia (formerly BellCore), its successor or assign, on behalf of API. BellSouth will distribute copies of these reports to API on a monthly basis.

3.19.5 BellSouth will receive the monthly Calling Card and Third Number Settlement System (CATS) reports from Telcordia (formerly BellCore), its successor or assign, on behalf of API. BellSouth will distribute copies of these reports to API on a monthly basis.

3.19.6 BellSouth will collect the revenue earned by API from the Bell operating company in whose territory the messages are billed (CATS), less a per message billing and collection fee of five cents ($0.05), on behalf of API. BellSouth will remit the revenue billed by API to the Bell operating company in whose territory the messages originated, less a per message billing and collection fee of five cents ($0.05), on behalf on API. These two amounts will be netted together by BellSouth and the resulting charge or credit issued to API via a monthly Carrier Access Billing System (CABS) miscellaneous bill.

3.19.7 BellSouth will collect the revenue earned by API within the BellSouth territory from another CLEC also within the BellSouth territory (NICS) where the messages are billed, less a per message billing and collection fee of five cents ($0.05), on behalf of API. BellSouth will remit the revenue billed by API within the BellSouth region to the CLEC also within the BellSouth region, where the messages originated, less a per message billing and collection fee of five cents

($0.05). These two amounts will be netted together by BellSouth and the resulting charge or credit issued to API via a monthly CABS miscellaneous bill.

BellSouth and API agree that monthly netted amounts of less than fifty dollars ($50.00) will not be settled.

4. Optional Daily Usage File

4.1 Upon written request from API, BellSouth will provide the Optional Daily Usage File (ODUF) service to API pursuant to the terms and conditions set forth in this section.

4.2 API shall furnish all relevant information required by BellSouth for the provision of the ODUF.

4.3 The Optional Daily Usage Feed will contain billable messages that were carried over the BellSouth Network and processed in the BellSouth Billing System, but billed to a API customer.

4.4 Charges for delivery of the ODUF will appear on APIs' monthly bills. The charges are as set forth in Exhibit A to this Attachment.

4.5 The Optional Daily Usage Feed will contain both rated and unrated messages. All messages will be in the standard Alliance for Telecommunications Industry Solutions (ATIS) EMI record format.

4.6 Messages that error in the billing system of API will be the responsibility of API. If, however, API should encounter significant volumes of errored messages that prevent processing by API within its systems, BellSouth will work with API to determine the source of the errors and the appropriate resolution.

4.7 The following specifications shall apply to the Optional Daily Usage Feed.

4.7.1 <u>Usage To Be Transmitted</u>

4.7.1.1 The following messages recorded by BellSouth will be transmitted to API:

- Message recording for per use/per activation type services (examples: ` Three -Way Calling, Verify, Interrupt, Call Return, etc.)

- Measured billable Local

- Directory Assistance messages

- IntraLATA Toll

- WATS and 800 Service
- N11
- Information Service Provider Messages
- Operator Services Messages
- Operator Services Message Attempted Calls (Network Element only)
- Credit/Cancel Records
- Usage for Voice Mail Message Service

4.7.1.2 Rated Incollects (originated in BellSouth and from other companies) can also be on ODUF. Rated Incollects will be intermingled with BellSouth recorded rated and unrated usage. Rated Incollects will not be packed separately.

4.7.1.3 BellSouth will perform duplicate record checks on records processed to ODUF. Any duplicate messages detected will be deleted and not sent to API.

4.7.1.4 In the event that API detects a duplicate on ODUF they receive from BellSouth, API will drop the duplicate message (API will not return the duplicate to BellSouth).

4.7.2 Physical File Characteristics

4.7.2.1 ODUF will be distributed to API via an agreed medium with CONNECT:Direct being the preferred transport method. The Daily Usage Feed will be a variable block format (2476) with an LRECL of 2472. The data on the Daily Usage Feed will be in a non-compacted EMI format (175 byte format plus modules). It will be created on a daily basis (Monday through Friday except holidays). Details such as dataset name and delivery schedule will be addressed during negotiations of the distribution medium. There will be a maximum of one dataset per workday per OCN.

4.7.2.2 Data circuits (private line or dial-up) may be required between BellSouth and API for the purpose of data transmission. Where a dedicated line is required, API will be responsible for ordering the circuit, overseeing its installation and coordinating the installation with BellSouth. API will also be responsible for any charges associated with this line. Equipment required on the BellSouth end to attach the line to the mainframe computer and to transmit successfully ongoing will be negotiated on a case by case basis. Where a dial-up facility is required, dial circuits will be installed in the BellSouth data center by BellSouth and the associated charges assessed to API. Additionally, all message toll charges associated with the use of the dial circuit by API will be the responsibility of API. Associated equipment on the BellSouth end, including a modem, will be

negotiated on a case by case basis between the Parties. All equipment, including modems and software, that is required on API's end for the purpose of data transmission will be the responsibility of API.

4.7.3 Packing Specifications

4.7.3.1 A pack will contain a minimum of one message record or a maximum of 99,999 message records plus a pack header record and a pack trailer record. One transmission can contain a maximum of 99 packs and a minimum of one pack.

4.7.3.2 The OCN, From RAO, and Invoice Number will control the invoice sequencing. The From RAO will be used to identify to API which BellSouth RAO that is sending the message. BellSouth and API will use the invoice sequencing to control data exchange. BellSouth will be notified of sequence failures identified by API and resend the data as appropriate.

The data will be packed using ATIS EMI records.

4.7.4 Pack Rejection

4.7.4.1 API will notify BellSouth within one business day of rejected packs (via the mutually agreed medium). Packs could be rejected because of pack sequencing discrepancies or a critical edit failure on the Pack Header or Pack Trailer records (i.e. out-of-balance condition on grand totals, invalid data populated). Standard ATIS EMI Error Codes will be used. API will not be required to return the actual rejected data to BellSouth. Rejected packs will be corrected and retransmitted to API by BellSouth.

4.7.5 Control Data

4.7.5.1 API will send one confirmation record per pack that is received from BellSouth. This confirmation record will indicate API received the pack and the acceptance or rejection of the pack. Pack Status Code(s) will be populated using standard ATIS EMI error codes for packs that were rejected by API for reasons stated in the above section.

4.7.6 Testing

4.7.6.1 Upon request from API, BellSouth shall send test files to API for ODUF. The Parties agree to review and discuss the file's content and/or format. For testing of usage results, BellSouth shall request that API set up a production (LIVE) file. The live test may consist of API's employees making test calls for the types of services API requests on ODUF. These test calls are logged by API, and the logs are provided to BellSouth. These logs will be used to verify the files. Testing will be completed within 30 calendar days from the date on which the initial test file was sent.

5. Access Daily Usage File

5.1. Upon written request from API, BellSouth will provide the Access Daily Usage File (ADUF) service to API pursuant to the terms and conditions set forth in this section.

5.2 API shall furnish all relevant information required by BellSouth for the provision of ADUF.

5.3 ADUF will contain access messages associated with a port that API has purchased from BellSouth

5.4 Charges for delivery of ADUF will appear on API's monthly bills. The charges are as set forth in Exhibit A to this Attachment. All messages will be in the standard ATIS EMI record format.

5.5 Messages that error in the billing system of API will be the responsibility of API. If, however, API should encounter significant volumes of errored messages that prevent processing by API within its systems, BellSouth will work with API to determine the source of the errors and the appropriate resolution.

5.6 <u>Usage To Be Transmitted</u>

5.6.1 The following messages recorded by BellSouth will be transmitted to API:

5.6.1.1 Recorded originating and terminating interstate and intrastate access records associated with a port.

5.6.1.2 Recorded terminating access records for undetermined jurisdiction access records associated with a port.

5.6.2 When API purchases Network Element ports from BellSouth and calls are made using these ports, BellSouth will handle the calls as follows:

5.6.2.1 Originating from Network Element and carried by Interexchange Carrier:

5.6.2.1.1 BellSouth will bill network element to CLEC and send access record to the CLEC via ADUF.

5.6.2.2 Originating from network element and carried by BellSouth (API is BellSouth's toll customer).

5.6.2.3 Terminating on network element and carried by Interexchange Carrier:

5.6.2.3.1 BellSouth will bill network element to API and send access record to API.

5.6.2.4 Terminating on network element and carried by BellSouth:

5.6.2.4.1 BellSouth will bill network element to API and send access record to API.

5.6.3 BellSouth will perform duplicate record checks on records processed to ADUF. Any duplicate messages detected will be dropped and not sent to API.

5.6.4 In the event that API detects a duplicate on ADUF they receive from BellSouth, API will drop the duplicate message (API will not return the duplicate to BellSouth.)

5.6.5 Physical File Characteristics

5.6.5.1 ADUF will be distributed to API via an agreed medium with CONNECT:Direct being the preferred transport method. The Daily Usage Feed will be a fixed block format (2476) with an LRECL of 2472. The data on the Daily Usage Feed will be in a non-compacted EMI format (210 byte format plus modules). It will be created on a daily basis (Monday through Friday except holidays). Details such as dataset name and delivery schedule will be addressed during negotiations of the distribution medium. There will be a maximum of one dataset per workday per OCN.

5.6.5.2 Data circuits (private line or dial-up) may be required between BellSouth and API for the purpose of data transmission. Where a dedicated line is required, API will be responsible for ordering the circuit, overseeing its installation and coordinating the installation with BellSouth. API will also be responsible for any charges associated with this line. Equipment required on the BellSouth end to attach the line to the mainframe computer and to transmit successfully ongoing will be negotiated on a case by case basis. Where a dial-up facility is required, dial circuits will be installed in the BellSouth data center by BellSouth and the associated charges assessed to API. Additionally, all message toll charges associated with the use of the dial circuit by API will be the responsibility of API. Associated equipment on the BellSouth end, including a modem, will be negotiated on a case by case basis between the Parties. All equipment, including modems and software, that is required on API's end for the purpose of data transmission will be the responsibility of API.

5.6.6 Packing Specifications

5.6.6.1 A pack will contain a minimum of one message record or a maximum of 99,999 message records plus a pack header record and a pack trailer record. One transmission can contain a maximum of 99 packs and a minimum of one pack.

5.6.6.2 The OCN, From RAO, and Invoice Number will control the invoice sequencing. The From RAO will be used to identify to API which BellSouth RAO is sending the message. BellSouth and API will use the invoice sequencing to control data exchange. BellSouth will be notified of sequence failures identified by API and resend the data as appropriate.

The data will be packed using ATIS EMI records.

5.6.7 Pack Rejection

5.6.7.1 API will notify BellSouth within one business day of rejected packs (via the mutually agreed medium). Packs could be rejected because of pack sequencing discrepancies or a critical edit failure on the Pack Header or Pack Trailer records (i.e. out-of-balance condition on grand totals, invalid data populated). Standard ATIS EMI Error Codes will be used. API will not be required to return the actual rejected data to BellSouth. Rejected packs will be corrected and retransmitted to API by BellSouth.

5.6.8 Control Data

5.6.8.1 API will send one confirmation record per pack that is received from BellSouth. This confirmation record will indicate API received the pack and the acceptance or rejection of the pack. Pack Status Code(s) will be populated using standard ATIS EMI error codes for packs that were rejected by API for reasons stated in the above section.

5.6.9 Testing

5.6.9.1 Upon request from API, BellSouth shall send a test file of generic data to API via Connect:Direct or Text File via E-Mail. The Parties agree to review and discuss the test file's content and/or format.

BELLSOUTH/API RATES
ODUF/ADUF/CMDS

		RATES BY STATE								
DESCRIPTION	**USOC**	**AL**	**FL**	**GA**	**KY**	**LA**	**MS**	**NC**	**SC**	**TN**
ODUF/ADUF/CMDS										
ODUF: Recording, per message	N/A	$0.0002	$0.008	$0.0001275	$0.0008611	$0.00019	$0.0001179	$0.0003	$0.0002862	$0.008
ODUF: Message Processing, per message	N/A	$0.0033	$0.004	$0.0082548	$0.0032357	$0.0024	$0.0032089	$0.0032	$0.0032344	$0.004
ADUF: Message Processing, per message	N/A	$0.004	$0.004	$0.0136327	$0.004	$0.004	$0.004	$0.004	$0.004	$0.004
CMDS: Message Processing, per message	N/A	$0.004	$0.004	$0.004	$0.004	$0.004	$0.004	$0.004	$0.004	$0.004
ODUF: Message Processing, per magnetic tape provisioned	N/A	$55.19	$54.95	$28.85	$55.68	$47.30	$54.62	$54.61	$54.72	$54.95
ODUF: Data Transmission (CONNECT:DIRECT), per message	N/A	$0.00004	$0.001	$0.0000434	$0.0000365	$0.00003	$0.0000354	$0.0004	$0.0000357	$0.001
ADUF: Data Transmission (CONNECT:DIRECT), per message	N/A	$0.001	$0.001	$0.0000434	$0.001	$0.001	$0.001	$0.001	$0.001	$0.001
CMDS: Data Transmission (CONNECT:DIRECT), per message	N/A	$0.001	$0.001	$0.001	$0.001	$0.001	$0.001	$0.001	$0.001	$0.001

NOTES:

If no rate is identified in the contract, the rate for the specific service or function will be as set forth in applicable BellSouth tariff or as negotiated by the Parties upon request by either Party.

Attachment 8

Rights-of-Way, Conduits and Pole Attachments

Rights-of-Way, Conduits and Pole Attachments

BellSouth will provide nondiscriminatory access to any pole, duct, conduit, or right-of-way owned or controlled by BellSouth pursuant to 47 U.S.C. § 224, as amended by the Act, pursuant to terms and conditions of a license agreement subsequently negotiated with BellSouth's Competitive Structure Provisioning Center.

Attachment 9

Performance Measurements

Performance Measurements

Upon a particular Commission's issuance of an Order pertaining to Performance Measurements in a proceeding expressly applicable to all CLECs generally, BellSouth shall implement in that state such Performance Measurements as of the date specified by the Commission.

AGREEMENT IMPLEMENTATION TEMPLATE (Residence)
for
API
BellSouth Standard Interconnection Agreement

Agreement Effective Date: <<effective_date>>	**Agreement Expiration Date: <<expiration_date>>**
Account Manager:	**Account Manager Tel No:**

Attachment Name/Number	Section Number	Version Date	Planned Activities
Terms/Conditions	1	09/29/00	
	2	09/29/00	
	3	09/29/00	
	4	09/29/00	
	5	09/29/00	
	6	09/29/00	
	7	09/29/00	
	8	09/29/00	
	9	09/29/00	
	10	09/29/00	
	11	09/29/00	
	12	09/29/00	
	13	09/29/00	
	14	09/29/00	
	15	09/29/00	
	16	09/29/00	
	17	09/29/00	
	18	09/29/00	
	19	09/29/00	
	20	09/29/00	
	21	09/29/00	
	22	09/29/00	
	23	09/29/00	
	24	09/29/00	
	25	09/29/00	
	26	09/29/00	
	27	09/29/00	
	28	09/29/00	

AGREEMENT IMPLEMENTATION TEMPLATE (Residence)
for
API
BellSouth Standard Interconnection Agreement

Attachment Name/Number	Section Number	Version Date	Planned Activities
	29	09/29/00	
	30	09/29/00	
	31	09/29/00	
	32	09/29/00	
	33	09/29/00	
1-Resale	1	09/29/00	
	2	09/29/00	
	3	09/29/00	
	4	09/29/00	
	5	09/29/00	
	6	09/29/00	
	7	09/29/00	
	8	09/29/00	
	9	09/29/00	
	10	09/29/00	
	11	09/29/00	
	12	09/29/00	
	Exhibit A	09/29/00	
	Exhibit B	09/29/00	
	Exhibit C	09/29/00	
	Exhibit D	09/29/00	
	Exhibit E	09/29/00	
	Exhibit F	09/29/00	
2-Network Elements & Oth Svs	1	09/29/00	
	2	09/29/00	
	3	09/29/00	
	4	09/29/00	
	5	09/29/00	
	6	09/29/00	
	7	09/29/00	
	8	09/29/00	

AGREEMENT IMPLEMENTATION TEMPLATE (Residence)
for
API
BellSouth Standard Interconnection Agreement

Attachment Name/Number	Section Number	Version Date	Planned Activities
	9	09/29/00	
	10	09/29/00	
	11	09/29/00	
	12	09/29/00	
	13	09/29/00	
	Exhibit A	09/29/00	
	Exhibit B	09/29/00	
	Exhibit C	09/29/00	
3-Local Interconnection	1	09/29/00	
	2	09/29/00	
	3	09/29/00	
	4	09/29/00	
	5	09/29/00	
	6	09/29/00	
	7	09/29/00	
	Exhibit A	09/29/00	
	Exhibit B	09/29/00	
	Exhibit C	09/29/00	
	Exhibit D	09/29/00	
	Exhibit E	09/29/00	
4-Physical Collocation	1	09/29/00	
	2	09/29/00	
	3	09/29/00	
	4	09/29/00	
	5	09/29/00	
	6	09/29/00	
	7	09/29/00	
	8	09/29/00	
	9	09/29/00	
	10	09/29/00	
	11	09/29/00	

AGREEMENT IMPLEMENTATION TEMPLATE (Residence)
for
API
BellSouth Standard Interconnection Agreement

Attachment Name/Number	Section Number	Version Date	Planned Activities
	12	09/29/00	
	13	09/29/00	
	14	09/29/00	
	Exhibit A	09/29/00	
	Exhibit B	09/29/00	
5-Access to Numbers/Num Portability	1	09/29/00	
	2	09/29/00	
	3	09/29/00	
	4	09/29/00	
	5	09/29/00	
	6	09/29/00	
	7	09/29/00	
	8	09/29/00	
	Exhibit A	09/29/00	
6-Pre-Ordering,Ordering/ Provisioning/Maint/Repair	1	09/29/00	
	2	09/29/00	
	3	09/29/00	
7-Billing	1	09/29/00	
	2	09/29/00	
	3	09/29/00	
	4	09/29/00	
	5	09/29/00	
	Exhibit A	09/29/00	
8-ROW/Conduits/PoleAtt	1	09/29/00	
9-Perf Measurement		09/29/00	
10-Agrmt Implementation Template		09/29/00	
11-Disaster Recovery		09/29/00	

AGREEMENT IMPLEMENTATION TEMPLATE (Business)
for
API
BellSouth Standard Interconnection Agreement

Agreement Effective Date:	**Agreement Expiration Date:**
Account Manager:	**Account Manager Tel No:**

Attachment Name	Section No.	Version Date	Planned Activities
Terms/Conditions	1	09/29/00	
	2	09/29/00	
	3	09/29/00	
	4	09/29/00	
	5	09/29/00	
	6	09/29/00	
	7	09/29/00	
	8	09/29/00	
	9	09/29/00	
	10	09/29/00	
	11	09/29/00	
	12	09/29/00	
	13	09/29/00	
	14	09/29/00	
	15	09/29/00	
	16	09/29/00	
	17	09/29/00	
	18	09/29/00	
	19	09/29/00	
	20	09/29/00	
	21	09/29/00	
	22	09/29/00	
	23	09/29/00	
	24	09/29/00	
	25	09/29/00	
	26	09/29/00	
	27	09/29/00	
	28	09/29/00	

AGREEMENT IMPLEMENTATION TEMPLATE (Business)
for
API
BellSouth Standard Interconnection Agreement

Attachment Name	Section No.	Version Date	Planned Activities
	29	09/29/00	
	30	09/29/00	
	31	09/29/00	
	32	09/29/00	
	33	09/29/00	
1-Resale	1	09/29/00	
	2	09/29/00	
	3	09/29/00	
	4	09/29/00	
	5	09/29/00	
	6	09/29/00	
	7	09/29/00	
	8	09/29/00	
	9	09/29/00	
	10	09/29/00	
	11	09/29/00	
	12	09/29/00	
	Exhibit A	09/29/00	
	Exhibit B	09/29/00	
	Exhibit C	09/29/00	
	Exhibit D	09/29/00	
	Exhibit E	09/29/00	
	Exhibit F	09/29/00	
2-Network Elements & Other Services	1	09/29/00	
	2	09/29/00	
	3	09/29/00	
	4	09/29/00	
	5	09/29/00	
	6	09/29/00	
	7	09/29/00	
	8	09/29/00	

AGREEMENT IMPLEMENTATION TEMPLATE (Business)
for
API
BellSouth Standard Interconnection Agreement

Attachment Name	Section No.	Version Date	Planned Activities
	9	09/29/00	
	10	09/29/00	
	11	09/29/00	
	12	09/29/00	
	13	09/29/00	
	Exhibit A	09/29/00	
	Exhibit B	09/29/00	
	Exhibit C	09/29/00	
3-Local Interconnection	1	09/29/00	
	2	09/29/00	
	3	09/29/00	
	4	09/29/00	
	5	09/29/00	
	6	09/29/00	
	7	09/29/00	
	Exhibit A	09/29/00	
	Exhibit B	09/29/00	
	Exhibit C	09/29/00	
	Exhibit D	09/29/00	
	Exhibit E	09/29/00	
4-Physical Collocation	1	09/29/00	
	2	09/29/00	
	3	09/29/00	
	4	09/29/00	
	5	09/29/00	
	6	09/29/00	
	7	09/29/00	
	8	09/29/00	
	9	09/29/00	
	10	09/29/00	
	11	09/29/00	

AGREEMENT IMPLEMENTATION TEMPLATE (Business)
for
API
BellSouth Standard Interconnection Agreement

Attachment Name	Section No.	Version Date	Planned Activities
	12	09/29/00	
	13	09/29/00	
	14	09/29/00	
	Exhibit A	09/29/00	
	Exhibit B	09/29/00	
5-Access to Numbers/Num Portability	1	09/29/00	
	2	09/29/00	
	3	09/29/00	
	4	09/29/00	
	5	09/29/00	
	6	09/29/00	
	7	09/29/00	
	8	09/29/00	
	Exhibit A	09/29/00	
6-Pre-Ord/Ord/Prov/Maint/ Repair	1	09/29/00	
	2	09/29/00	
	3	09/29/00	
7-Billing	1	09/29/00	
	2	09/29/00	
	3	09/29/00	
	4	09/29/00	
	5	09/29/00	
	Exhibit A	09/29/00	
8-ROW/Conduits/PoleAtt	1	09/29/00	
9-Perf Measurement		09/29/00	
10-Agmt Implementation Template		09/29/00	
11-Disaster Recovery Plan		09/29/00	

Attachment 11
BellSouth Disaster Recovery Plan

The attached BellSouth Disaster Recovery Plan is for the state of Tennessee. The BellSouth Disaster Recovery Plan for the remaining states can be accessed via the internet @ http://www.interconnection.bellsouth.com.

2000
BELLSOUTH
TENNESSEE
DISASTER RECOVERY PLANNING

For

CLECS

CONTENTS

PAGE

1.0 Purpose 4
2.0 Single Point of Contact 4
3.0 Identifying the Problem 4
3.1 Site Control 5
3.2 Environmental Concerns 6
4.0 The Emergency Control Center (ECC) 6
5.0 Recovery Procedures 7
5.1 CLEC Outage 7
5.2 BellSouth Outage 7
5.2.1 Loss of Central Office 8
5.2.2 Loss of a Central Office with Serving Wire Center Functions 8
5.2.3 Loss of a Central Office with Tandem Functions 8
5.2.4 Loss of a Facility Hub 9
5.3 Combined Outage (CLEC and BellSouth Equipment 9
6.0 T1 Identification Procedures 9
7.0 Acronyms 10

1.0 PURPOSE

In the unlikely event of a disaster occurring that affects BellSouth's long-term ability to deliver traffic to a Competitive Local Exchange Carrier (CLEC), general procedures have been developed to hasten the recovery process. Since each location is different and could be affected by an assortment of potential problems, a detailed recovery plan is impractical. However, in the process of reviewing recovery activities for specific locations, some basic procedures emerge that appear to be common in most cases.

These general procedures should apply to any disaster that affects the delivery of traffic for an extended time period. Each CLEC will be given the same consideration during an outage and service will be restored as quickly as possible.

This document will cover the basic recovery procedures that would apply to every CLEC.

2.0 SINGLE POINT OF CONTACT

When a problem is experienced, regardless of the severity, the BellSouth Network Management Center (NMC) will observe traffic anomalies and begin monitoring the situation. Controls will be appropriately applied to insure the sanity of BellSouth's network; and, in the event that a switch or facility node is lost, the NMC will attempt to circumvent the failure using available reroutes.

BellSouth's NMC will remain in control of the restoration efforts until the problem has been identified as being a long-term outage. At that time, the NMC will contact BellSouth's Emergency Control Center (ECC) and relinquish control of the recovery efforts. Even though the ECC may take charge of the situation, the NMC will continue to monitor the circumstances and restore traffic as soon as damaged network elements are revitalized.

The telephone number for the BellSouth Network Management Center in Atlanta, as published in Telcordia's National Network Management Directory, is 404-321-2516.

3.0 IDENTIFYING THE PROBLEM

During the early stages of problem detection, the NMC will be able to tell which CLECs are affected by the catastrophe. Further analysis and/or first hand observation will determine if the disaster has affected CLEC equipment only; BellSouth equipment only or a combination. The initial restoration activity will be largely determined by the equipment that is affected.

Once the nature of the disaster is determined and after verifying the cause of the problem, the NMC will initiate reroutes and/or transfers that are jointly agreed upon by the affected CLECs' Network Management Center and the BellSouth NMC. The type and percentage of controls used will depend upon available network capacity. Controls necessary to stabilize the situation will be invoked and the NMC will attempt to re-establish as much traffic as possible.

For long term outages, recovery efforts will be coordinated by the Emergency Control Center (ECC). Traffic controls will continue to be applied by the NMC until facilities are re-established. As equipment is made available for service, the ECC will instruct the NMC to begin removing the controls and allow traffic to resume.

3.1 SITE CONTROL

In the total loss of building use scenario, what likely exists will be a smoking pile of rubble. This rubble will contain many components that could be dangerous. It could also contain any personnel on the premises at the time of the disaster. For these reasons, the local fire marshal with the assistance of the police will control the site until the building is no longer a threat to surrounding properties and the companies have secured the site from the general public.

During this time, the majority owner of the building should be arranging for a demolition contractor to mobilize to the site with the primary objective of reaching the cable entrance facility for a damage assessment. The results of this assessment would then dictate immediate plans for restoration, both short term and permanent.

In a less catastrophic event, i.e., the building is still standing and the cable entrance facility is usable, the situation is more complex. The site will initially be controlled by local authorities until the threat to adjacent property has diminished. Once the site is returned to the control of the companies, the following events should occur.

An initial assessment of the main building infrastructure systems (mechanical, electrical, fire and life safety, elevators, and others) will establish building needs. Once these needs are determined, the majority owner should lead the building restoration efforts. There may be situations where the site will not be totally restored within the confines of the building. The companies must individually determine their needs and jointly assess the cost of permanent restoration to determine the overall plan of action.

Multiple restoration trailers from each company will result in the need for designated space and installation order. This layout and control is required to maximize the amount of restoration equipment that can be placed at the site, and the priority of placements.

Care must be taken in this planning to insure other restoration efforts have logistical access to the building. Major components of telephone and building equipment will need to be removed and replaced. A priority for this equipment must also be jointly established to facilitate overall site restoration. (Example: If the AC switchgear has sustained damage, this would be of the highest priority in order to regain power, lighting, and HVAC throughout the building.)

If the site will not accommodate the required restoration equipment, the companies would then need to quickly arrange with local authorities for street closures, rights of way or other possible options available.

3.2 ENVIRONMENTAL CONCERNS

In the worse case scenario, many environmental concerns must be addressed. Along with the police and fire marshal, the state environmental protection department will be on site to monitor the situation.

Items to be concerned with in a large central office building could include:

1. Emergency engine fuel supply. Damage to the standby equipment and the fuel handling equipment could have created "spill" conditions that have to be handled within state and federal regulations.

2. Asbestos containing materials that may be spread throughout the wreckage. Asbestos could be in many components of building, electrical, mechanical, outside plant distribution, and telephone systems.

3. Lead and acid. These materials could be present in potentially large quantities depending upon the extent of damage to the power room.

4. Mercury and other regulated compounds resident in telephone equipment.

5. Other compounds produced by the fire or heat.

Once a total loss event occurs at a large site, local authorities will control immediate clean up (water placed on the wreckage by the fire department) and site access.

At some point, the companies will become involved with local authorities in the overall planning associated with site clean up and restoration. Depending on the clean up approach taken, delays in the restoration of several hours to several days may occur.

In a less severe disaster, items listed above are more defined and can be addressed individually depending on the damage.

In each case, the majority owner should coordinate building and environmental restoration as well as maintain proper planning and site control.

4.0 THE EMERGENCY CONTROL CENTER (ECC)

The ECC is located in the Colonnade Building in Birmingham, Alabama. During an emergency, the ECC staff will convene a group of pre-selected experts to inventory the damage and initiate corrective actions. These experts have regional access to BellSouth's personnel and equipment and will assume control of the restoration activity anywhere in the nine-state area.

In the past, the ECC has been involve with restoration activities resulting from hurricanes, ice storms and floods. They have demonstrated their capabilities during these calamities as well as

during outages caused by human error or equipment failures. This group has an excellent record of restoring service as quickly as possible.

During a major disaster, the ECC may move emergency equipment to the affected location, direct recovery efforts of local personnel and coordinate service restoration activities with the CLECs. The ECC will attempt to restore service as quickly as possible using whatever means is available; leaving permanent solutions, such as the replacement of damaged buildings or equipment, for local personnel to administer.

Part of the ECC's responsibility, after temporary equipment is in place, is to support the NMC efforts to return service to the CLECs. Once service has been restored, the ECC will return control of the network to normal operational organizations. Any long-term changes required after service is restored will be made in an orderly fashion and will be conducted as normal activity.

5.0 RECOVERY PROCEDURES

The nature and severity of any disaster will influence the recovery procedures. One crucial factor in determining how BellSouth will proceed with restoration is whether or not BellSouth's equipment is incapacitated. Regardless of who's equipment is out of service, BellSouth will move as quickly as possible to aid with service recovery; however, the approach that will be taken may differ depending upon the location of the problem.

5.1 CLEC OUTAGE

For a problem limited to one CLEC (or a building with multiple CLECs), BellSouth has several options available for restoring service quickly. For those CLECs that have agreements with other CLECs, BellSouth can immediately start directing traffic to a provisional CLEC for completion. This alternative is dependent upon BellSouth having concurrence from the affected CLECs.

Whether or not the affected CLECs have requested a traffic transfer to another CLEC will not impact BellSouth's resolve to re-establish traffic to the original destination as quickly as possible.

5.2 BELLSOUTH OUTAGE

Because BellSouth's equipment has varying degrees of impact on the service provided to the CLECs, restoring service from damaged BellSouth equipment is different. The outage will probably impact a number of Carriers simultaneously. However, the ECC will be able to initiate immediate actions to correct the problem.

A disaster involving any of BellSouth's equipment locations could impact the CLECs, some more than others. A disaster at a Central Office (CO) would only impact the delivery of traffic to and from that one location, but the incident could affect many Carriers. If the Central Office is a Serving Wire Center (SWC), then traffic from the entire area to those Carriers served from that switch would also be impacted. If the switch functions as an Access Tandem, or there is a tandem in the building, traffic from every CO to every CLEC could be interrupted. A disaster that destroys a facility hub could disrupt various traffic flows, even though the switching equipment may be unaffected.

The NMC would be the first group to observe a problem involving BellSouth's equipment. Shortly after a disaster, the NMC will begin applying controls and finding re-routes for the

completion of as much traffic as possible. These reroutes may involve delivering traffic to alternate Carriers upon receiving approval from the CLECs involved. In some cases, changes in translations will be required. If the outage is caused by the destruction of equipment, then the ECC will assume control of the restoration.

5.2.1 Loss of a Central Office

When BellSouth loses a Central Office, the ECC will

a) Place specialists and emergency equipment on notice;

b) Inventory the damage to determine what equipment and/or functions are lost;

c) Move containerized emergency equipment and facility equipment to the stricken area, if necessary;

d) Begin reconnecting service for Hospitals, Police and other emergency agencies; and

e) Begin restoring service to CLECs and other customers.

5.2.2 Loss of a Central Office with Serving Wire Center Functions

The loss of a Central Office that also serves as a Serving Wire Center (SWC) will be restored as described in section 5.2.1.

5.2.3 Loss of a Central Office with Tandem Functions

When BellSouth loses a Central Office building that serves as an Access Tandem and as a SWC, the ECC will

a) Place specialists and emergency equipment on notice;

b) Inventory the damage to determine what equipment and/or functions are lost;

c) Move containerized emergency equipment and facility equipment to the stricken area, if necessary;

d) Begin reconnecting service for Hospitals, Police and other emergency agencies;

e) Re-direct as much traffic as possible to the alternate access tandem (if available) for delivery to those CLECs utilizing a different location as a SWC;

f) Begin aggregating traffic to a location near the damaged building. From this location, begin re-establishing trunk groups to the CLECs for the delivery of traffic normally found on the direct trunk groups. (This aggregation point may be the alternate access tandem location or another CO on a primary facility route.)

g) Begin restoring service to CLECs and other customers.

5.2.4 Loss of a Facility Hub

In the event that BellSouth loses a facility hub, the recovery process is much the same as above. Once the NMC has observed the problem and administered the appropriate controls, the ECC will assume authority for the repairs. The recovery effort will include

a) Placing specialists and emergency equipment on notice;

b) Inventorying the damage to determine what equipment and/or functions are lost;

c) Moving containerized emergency equipment to the stricken area, if necessary;

d) Reconnecting service for Hospitals, Police and other emergency agencies; and

e) Restoring service to CLECs and other customers. If necessary, BellSouth will aggregate the traffic at another location and build temporary facilities. This alternative would be viable for a location that is destroyed and building repairs are required.

5.3 COMBINED OUTAGE (CLEC AND BELLSOUTH EQUIPMENT)

In some instances, a disaster may impact BellSouth's equipment as well as the CLECs'. This situation will be handled in much the same way as described in section 5.2.3. Since BellSouth and the CLECs will be utilizing temporary equipment, close coordination will be required.

6.0 T1 IDENTIFICATION PROCEDURES

During the restoration of service after a disaster, BellSouth may be forced to aggregate traffic for delivery to a CLEC. During this process, T1 traffic may be consolidated onto DS3s and may become unidentifiable to the Carrier. Because resources will be limited, BellSouth may be forced to "package" this traffic entirely differently then normally received by the CLECs. Therefore, a method for identifying the T1 traffic on the DS3s and providing the information to the Carriers is required.

7.0 ACRONYMS

CO	-	Central Office (BellSouth)
DS3	-	Facility that carries 28 T1s (672 circuits)
ECC	-	Emergency Control Center (BellSouth)
CLEC	-	Competitive Local Exchange Carrier
NMC	-	Network Management Center
SWC	-	Serving Wire Center (BellSouth switch)
T1	-	Facility that carries 24 circuits

Hurricane Information

During a hurricane, BellSouth will make every effort to keep CLECs updated on the status of our network. Information centers will be set up throughout BellSouth Telecommunications. These centers are not intended to be used for escalations, but rather to keep the CLEC informed of network related issues, area damages and dispatch conditions, etc.

Hurricane-related information can also be found on line at http://www.interconnection.bellsouth.com/network/disaster/dis_resp.htm. Information concerning Mechanized Disaster Reports can also be found at this website by clicking on CURRENT MDR REPORTS or by going directly to http://www.interconnection.bellsouth.com/network/disaster/mdrs.htm.

BST Disaster Management Plan

BellSouth maintenance centers have geographical and redundant communication capabilities. In the event of a disaster removing any maintenance center from service another geographical center would assume maintenance responsibilities. The contact numbers will not change and the transfer will be transparent to the CLEC.

Attachment 12

Bona Fide Request and New Business Requests Process

BONA FIDE REQUEST AND NEW BUSINESS REQUESTS PROCESS

1.0 The Parties agree that API is entitled to order any Network Element, Interconnection option, service option or Resale Service required to be made available by the Communications Act of 1934, as modified by the Telecommunications Act of 1996 (the "Act"), FCC requirements or State Commission requirements. API also shall be permitted to request the development of new or revised facilities or service options which are not required by the Act. Procedures applicable to requesting the addition of such facilities or service options are specified in this Attachment 12.

2.0 Bona Fide Requests ("BFR") are to be used when API makes a request of BellSouth to provide a new or modified network element, interconnection option, or other service option pursuant to the Act that was not previously included in the Agreement. New Business Requests ("NBRs") are to be used when API makes a request of BellSouth to provide a new or custom capability or function to meet API's business needs that was not previously included in the Agreement. The BFR/NBR process is intended to facilitate the two-way exchange of information between API and BellSouth, necessary for accurate processing of requests in a consistent and timely fashion.

3.0 A BFR shall be submitted in writing by API and shall specifically identify the required service date, technical requirements, space requirements and/or such specifications that clearly define the request such that BellSouth has sufficient information to analyze and prepare a response. Such a request also shall include a API's designation of the request as being (i) pursuant to the Telecommunications Act of 1996 (i.e. a "BFR") or (ii) pursuant to the needs of the business (i.e. a "NBR"). The request shall be sent to API's Account Executive.

4.0 API may cancel a BFR or NBR at any time. If API cancels the request more than three (3) business days after submitting it, API shall pay BellSouth's reasonable and demonstrable costs of processing and/or implementing the BFR or NBR up to the date of cancellation. If API does not cancel a BFR or NBR, API shall pay BellSouth's reasonable and demonstrable costs of processing and implementing the request.

5.0 Within twenty-five (25) business days of its receipt of a BFR or NBR from API, BellSouth shall respond to API by providing a preliminary analysis of such Interconnection, Network Element, or other facility or service option that is the subject of the BFR or NBR. The preliminary analysis shall confirm that BellSouth will either offer access to the

Interconnection, Network Element, or other facility or service option, or provide an explanation of why it is not technically feasible and/or why the request does not qualify as an Interconnection, Network Element, or is not otherwise required to be provided under the Act.

6.0 If BellSouth determines that the Interconnection, Network Element, or other facility or service option that is the subject of the BFR is technically feasible, BellSouth shall propose a firm price and a detailed implementation plan within fifty (50) business days after receipt of the BFR. BellSouth may, but shall not be required to, provide a firm time and cost proposal for a NBR.

7.0 Within thirty (30) business days after its receipt of (i) a refusal of BellSouth to provide a BFR or NBR price quote, or (ii) the BFR or NBR price quote and implementation plan from BellSouth, API must either confirm or cancel its order for such facility or service option. If it believes such quote is not consistent with the requirements of the Act, API may at that time seek FCC or state Commission arbitration of its request, as appropriate. Any such arbitration applicable to Network Elements and/or Interconnection shall be conducted in accordance with standards prescribed in Section 252 of the Act.

8.0 Unless API agrees otherwise, all prices shall be consistent with the pricing principles of the Act, FCC and/or the State Commission.

9.0 If either Party to a BFR or NBR believes that the other Party is not requesting, negotiating, or processing the Bona Fide Request in good faith, or disputes a determination, or price or cost quote, such Party may seek FCC or state Commission resolution of the dispute, as appropriate.

10.0 Upon agreement to the terms of a BFR or NBR, an amendment to the Agreement may be required.